SAC-5P-M12MS/2,0-92X/M12FSSHOD - Bus system cable

1410467

https://www.phoenixcontact.com/us/products/1410467

Please be informed that the data shown in this PDF document is generated from our online catalog. Please find the complete data in the user documentation. Our general terms of use for downloads are valid.

Bus system cable, CANopen®, DeviceNet™, 5-position, FRNC halogen-free, black, shielded (Tinned copper braided shield), Plug straight M12, coding: A, on Socket straight M12, coding: A, cable length: 2 m, for outdoor applications, with high-grade steel knurl

Your advantages

- Easy and safe: 100 % electrically tested plug-in components
- Robust throughout: resistant to oil, UV, and ozone, withstands temperatures from -40°C … +105°C
- Reliable signal transmission – 360° shielding in environments with electromagnetic interference

Commercial data

Item number	1410467
Packing unit	1 pc
Minimum order quantity	1 pc
Sales key	BF04
Product key	BF1CKD
Catalog page	Page 187 (NTK-2014)
GTIN	4046356899055
Weight per piece (including packing)	179.5 g
Weight per piece (excluding packing)	170.7 g
Customs tariff number	85444290
Country of origin	PL

Technical data

Product properties

Product type	Data cable preassembled
Application	External areas
Sensor type	CANopen®
Number of positions	5
No. of cable outlets	1
Shielded	yes
Coding	A

Insulation characteristics

Degree of pollution	3

Interfaces

Bus system	CANopen®/DeviceNet™
Signal type/category	CANopen®
	DeviceNet™

Signaling

Status display	No
Status display present	No

Electrical properties

Insulation resistance	≥ 100 MΩ
Nominal voltage U_N	48 V AC
	60 V DC
Nominal current I_N	4 A
Transmission medium	Copper

Mechanical properties

Mechanical data

Insertion/withdrawal cycles	≥ 100

Material specifications

Flammability rating according to UL 94	V0
Seal material	FPM
Material of grip body	PP
Contact material	CuSn
Contact surface material	Ni/Au
Contact carrier material	PP
Material for screw connection	Stainless steel

Connection data

Pin assignment

Contact | Color (signal designation) | Contact (optional)	1 (Plug) | SR (shield) | 1 (Socket)
	2 (Plug) | RD (V+) | 2 (Socket)
	3 (Plug) | BK (V-) | 3 (Socket)
	4 (Plug) | WH (CAN_H) | 4 (Socket)
	5 (Plug) | BU (CAN_L) | 5 (Socket)

Connector

Connection 1

Type	Plug straight M12
Number of positions	5
Coding type	A (Standard)

Connection 2

Type	Socket straight M12
Number of positions	5
Coding type	A (Standard)

Cable/line

Cable length	2 m

CANopen®/DeviceNet™ outdoor installation, FRNC, black [92X]

Dimensional drawing	
Cable weight	70 kg/km
UL AWM Style	21281 (80°C/300 V)
Number of positions	4
Shielded	yes
Cable type	CANopen®/DeviceNet™ outdoor installation, FRNC, black [92X]
Conductor structure	2xAWG24/19+2xAWG22/19
Signal runtime	4.46 ns/m
Conductor structure signal line	19x 0.13 mm
AWG signal line	24
Conductor cross section	2x 0.25 mm² (Signal)
	2x 0.34 mm² (Power)
	1x 0.38 mm² (Drain wire)
Wire diameter incl. insulation	1.9 mm (Signal)
	1.4 mm (Power)

External cable diameter	6.90 mm ±0.3 mm
Outer sheath, material	FRNC
External sheath, color	black
Conductor material	Tin-plated Cu litz wires
Material wire insulation	PE
Single wire, color	red-black, blue-white
Thickness, insulation	0.60 mm (Signal)
	0.30 mm (Power)
Thickness, outer sheath	1.15 mm
Twisted pairs	2 cores to the pair
Type of pair shielding	Aluminum-lined foil
Overall twist	2 pairs around a drain wire in the center to the core
Optical shield covering	70 %
Max. conductor resistance	90 Ω/km (Signal)
	55 Ω/km (Power)
Insulation resistance	≥ 200 MΩ*km (at 20 °C)
Wave impedance	120 Ω ±12 Ω (f = 1 MHz)
Working capacitance	39.8 nF (at 1 kHz, core/core)
Nominal voltage, cable	≤ 300 V
Test voltage Core/Core	2000 V (50 Hz, 1 min.)
Test voltage Core/Shield	2000.00 V (50 Hz, 1 min.)
Minimum bending radius, fixed installation	5 x D
Minimum bending radius, flexible installation	10 x D
Smallest bending radius, fixed installation	35 mm
Smallest bending radius, movable installation	69 mm
Halogen-free	yes
Flame resistance	According to IEC 60332-3-25 (Cat. D)
Resistance to oil	yes
Other resistance	UV resistant
Ambient temperature (operation)	-40 °C ... 105 °C
Ambient temperature (installation)	-40 °C ... 105 °C

Environmental and real-life conditions

Ambient conditions

Degree of protection	IP65
	IP67
	IP68
	IP69K
Ambient temperature (operation)	-40 °C ... 105 °C (Plug / socket)
	-40 °C ... 85 °C (On sudden changes in temperature (according to IEC 60512-11-4))

Standards and regulations

M12

Standard designation	M12 connector
Standards/specifications	IEC 61076-2-101

Drawings

Circuit diagram

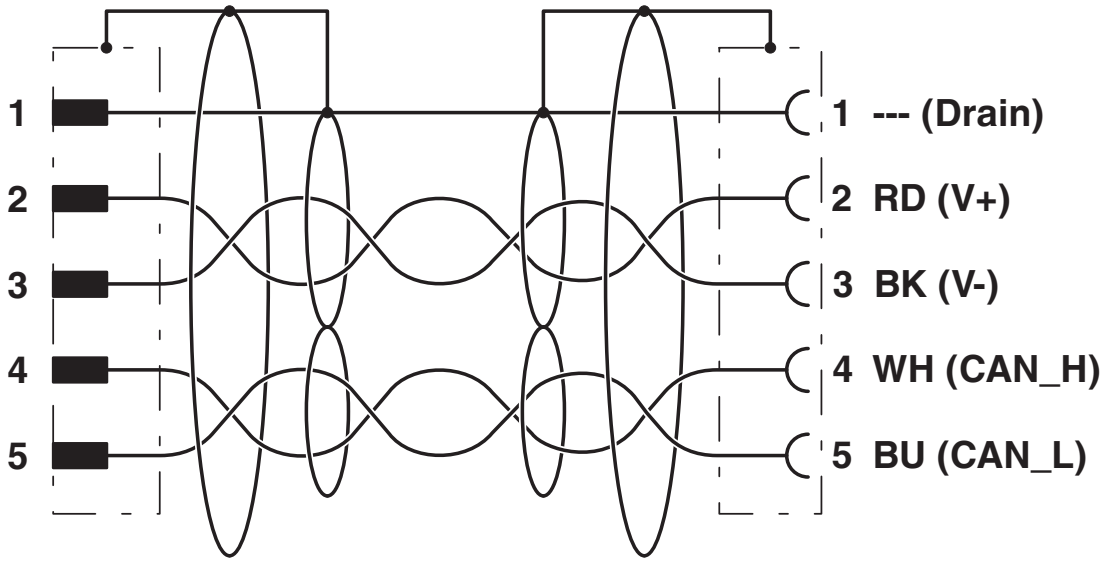

Schematic diagram

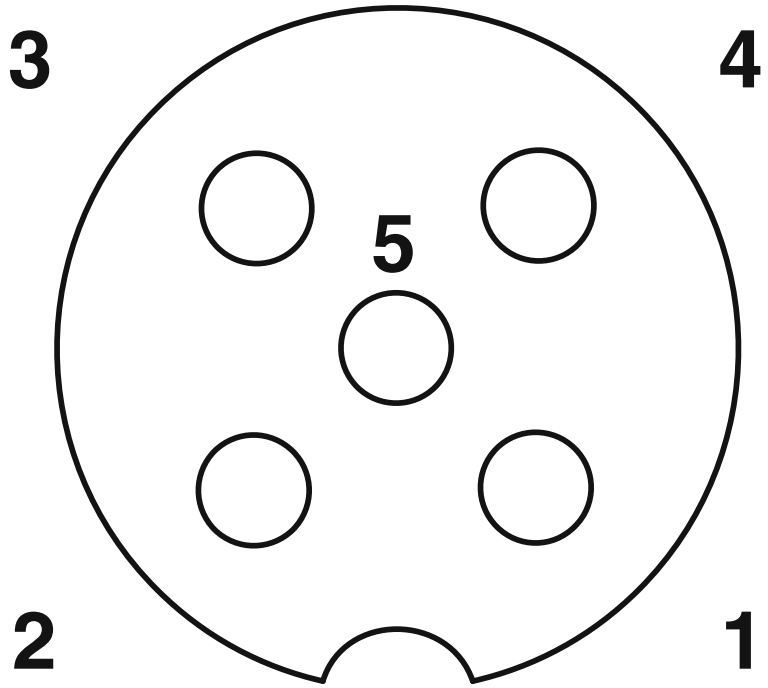

Pin assignment M12 socket, 5-pos., A-coded, socket side view

Schematic diagram

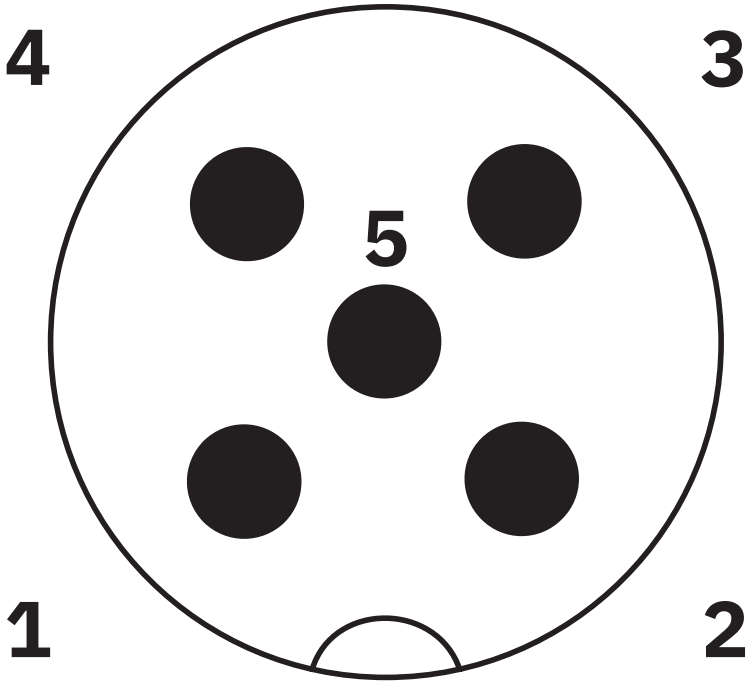

Pin assignment M12 male connector, 5-pos., A-coded, male side

Dimensional drawing

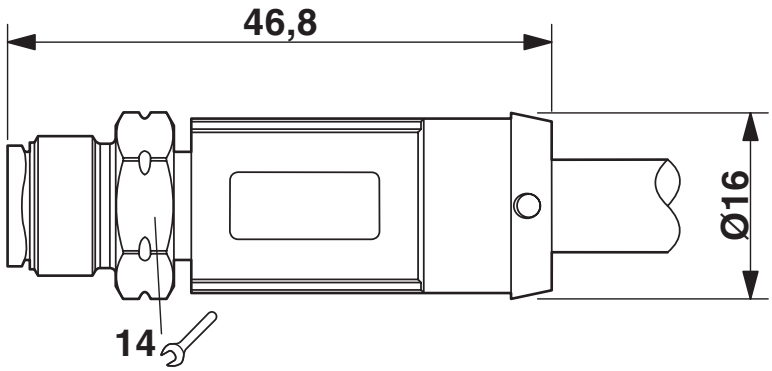

Plug, M12 x 1, straight, shielded

Dimensional drawing

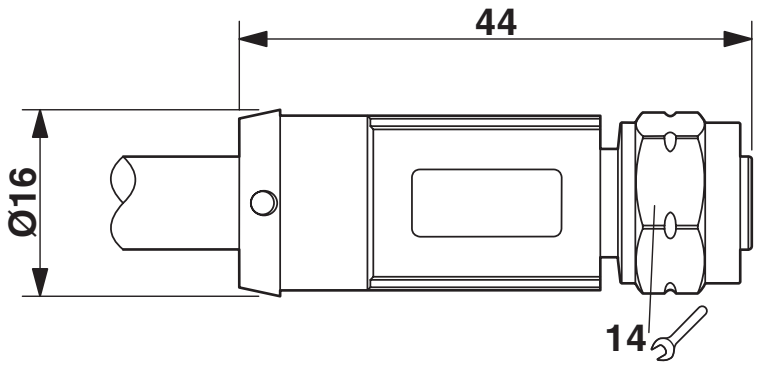

M12 x 1 socket, straight

Approvals

To download certificates, visit the product detail page: https://www.phoenixcontact.com/us/products/1410467

EAC-RoHS
Approval ID: RU D-DE.HB35.B.00387

Classifications

ECLASS

ECLASS-11.0	27060307
ECLASS-12.0	27060307
ECLASS-13.0	27060307

ETIM

ETIM 9.0	EC001855

UNSPSC

UNSPSC 21.0	26121600

Environmental product compliance

EU RoHS

Fulfills EU RoHS substance requirements	Yes, No exemptions

China RoHS

Environment friendly use period (EFUP)	EFUP-E
	No hazardous substances above the limits

EU REACH SVHC

REACH candidate substance (CAS No.)	No substance above 0.1 wt%

Accessories

TSD 04 SAC - Torque screwdriver

1208429

https://www.phoenixcontact.com/us/products/1208429

Torque screwdriver, with preset torque of 0.4 Nm and 4 mm hexagonal drive for M12 connectors

TSD-M 1,2NM - Torque screwdriver

1212224

https://www.phoenixcontact.com/us/products/1212224

Torque screw driver, accuracy as per EN ISO 6789 standard, adjustable from 0. 3 - 1.2 Nm

TSD-M SAC-BIT ADAPTER - Adapter insert

1212600

https://www.phoenixcontact.com/us/products/1212600

Adapter bit for TSD-M...torque tools, E6.3-1/4" drive with 4 mm hexagon to accommodate SAC bits

SAC BIT M12-W14 - Tool

1212513

https://www.phoenixcontact.com/us/products/1212513

Nut for assembling sensor/actuator cables with M12 connector and M12 connectors for assembly, with a hexagonal knurl wrench size of 14 mm, with 4 mm hexagonal drive

Phoenix Contact 2024 © - all rights reserved
https://www.phoenixcontact.com

Phoenix Contact USA
586 Fulling Mill Road
Middletown, PA 17057, United States
(+717) 944-1300
info@phoenixcon.com