EMSTBVA 2,5/ 5-G-5,08 - PCB header

1859548

https://www.phoenixcontact.com/pc/products/1859548

Please be informed that the data shown in this PDF document is generated from our online catalog. Please find the complete data in the user documentation. Our general terms of use for downloads are valid.

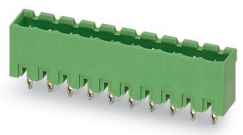

PCB headers, nominal cross section: 2.5 mm^2, color: green, nominal current: 12 A, rated voltage (III/2): 320 V, contact surface: Tin, contact connection type: Pin, number of potentials: 5, number of rows: 1, number of positions: 5, number of connections: 5, product range: EMSTBVA 2,5/..-G, pitch: 5.08 mm, mounting: Press-in technology, pin layout: Linear pinning, solder pin [P]: 3.9 mm, number of solder pins per potential: 1, plug-in system: COMBICON MSTB 2,5, Pin connector pattern alignment: Standard, locking: without, mounting: without, type of packaging: packed in cardboard

Your advantages

- Long-term stable press-in connection ensures high holding force without thermal load
- Maximum flexibility when it comes to device design – one header for connectors with different connection technologies
- Vertical connection enables multi-row arrangement on the PCB
- Closed contour for optimum stability of the plug-in connection

Commercial data

Item number	1859548
Packing unit	50 pc
Minimum order quantity	1 pc
Product key	AAC1EH
Catalog page	Page 311 (C-1-2013)
GTIN	4017918132965
Weight per piece (including packing)	2.096 g
Weight per piece (excluding packing)	2.096 g
Customs tariff number	85366930
Country of origin	DE

Technical data

Product properties

Product type	PCB headers
Product family	EMSTBVA 2,5/..-G
Product line	COMBICON Connectors M
Type	Standard
Number of positions	5
Pitch	5.08 mm
Number of connections	5
Number of rows	1
Number of potentials	5
Mounting flange	without
Pin layout	Linear pinning
Solder pins per potential	1

Electrical properties

Nominal current I_N	12 A
Nominal voltage U_N	320 V
Contact resistance	1.1 mΩ
Rated voltage (III/3)	200 V
Rated surge voltage (III/3)	4 kV
Rated voltage (III/2)	320 V
Rated surge voltage (III/2)	4 kV
Rated voltage (II/2)	320 V
Rated surge voltage (II/2)	4 kV

Mounting

Mounting type	Press-in technology
Pin layout	Linear pinning

Material specifications

Material data - contact

Note	WEEE/RoHS-compliant, free of whiskers according to IEC 60068-2-82/JEDEC JESD 201
Contact material	Cu alloy
Surface characteristics	Tin-plated
Metal surface contact area (top layer)	Tin (1 - 2 µm Sn)
Metal surface contact area (middle layer)	Nickel (2 - 3 µm Ni)
Metal surface soldering area (top layer)	Tin (1 - 2 µm Sn)
Metal surface soldering area (middle layer)	Nickel (2 - 3 µm Ni)

Material data - housing

Color ()	()

Insulating material	PBT
Insulating material group	IIIa
CTI according to IEC 60112	225
Flammability rating according to UL 94	V0

Notes

Notes on operation	In accordance with IEC 61984, COMBICON connectors have no switching power (COC). During designated use, they must not be plugged in or disconnected when carrying voltage or under load.

Dimensions

Dimensional drawing	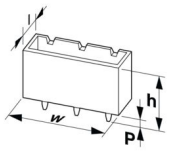
Pitch	5.08 mm
Width [w]	27.4 mm
Height [h]	15.9 mm
Length [l]	8.6 mm
Installed height	12 mm
Solder pin length [P]	3.9 mm

PCB design

Hole diameter	1.6 mm

Mechanical tests

Insertion and withdrawal forces

Result	Test passed
No. of cycles	25
Insertion strength per pos. approx.	5 N
Withdraw strength per pos. approx.	4 N

Electrical tests

Insulation resistance

Specification	IEC 60512-2:1985-00
Insulation resistance, neighboring positions	10^{12} Ω

Air clearances and creepage distances |

Specification	IEC 60664-1:2007-04
Insulating material group	IIIa
Comparative tracking index (IEC 60112)	CTI 225
Rated insulation voltage (III/3)	200 V
Rated surge voltage (III/3)	4 kV

minimum clearance value - non-homogenous field (III/3)	3 mm
minimum creepage distance (III/3)	3.2 mm
Rated insulation voltage (III/2)	320 V
Rated surge voltage (III/2)	4 kV
minimum clearance value - non-homogenous field (III/2)	3 mm
minimum creepage distance (III/2)	3.2 mm
Rated insulation voltage (II/2)	320 V
Rated surge voltage (II/2)	4 kV
minimum clearance value - non-homogenous field (II/2)	3 mm
minimum creepage distance (II/2)	3.2 mm

Environmental and real-life conditions

Vibration test

Specification	IEC 60068-2-6:1982 + AMD 2:1985
Frequency	10 - 150 - 10 Hz
Sweep speed	1 octave/min
Amplitude	0.35 mm (10 Hz ... 60.1 Hz)
Acceleration	5g (60.1 Hz ... 150 Hz)
Test duration per axis	2.5 h

Durability test

Specification	DIN VDE 0627:1993-05
Impulse withstand voltage at sea level	4.8 kV
Contact resistance R_1	1.1 mΩ
Contact resistance R_2	1.5 mΩ
Insertion/withdrawal cycles	25

Climatic test

Specification	DIN VDE 0627:1993-05
Corrosive stress	0.2 dm^3 SO_2 on 300 dm^3/40 °C/1 cycle
Thermal stress	100 °C/168 h
Power-frequency withstand voltage	2.21 kV

Ambient conditions

Ambient temperature (operation)	-40 °C ... 100 °C (dependent on the derating curve)
Ambient temperature (storage/transport)	-40 °C ... 70 °C
Relative humidity (storage/transport)	30 % ... 70 %
Ambient temperature (assembly)	-5 °C ... 100 °C

Packaging specifications

Type of packaging	packed in cardboard

Drawings

Dimensional drawing

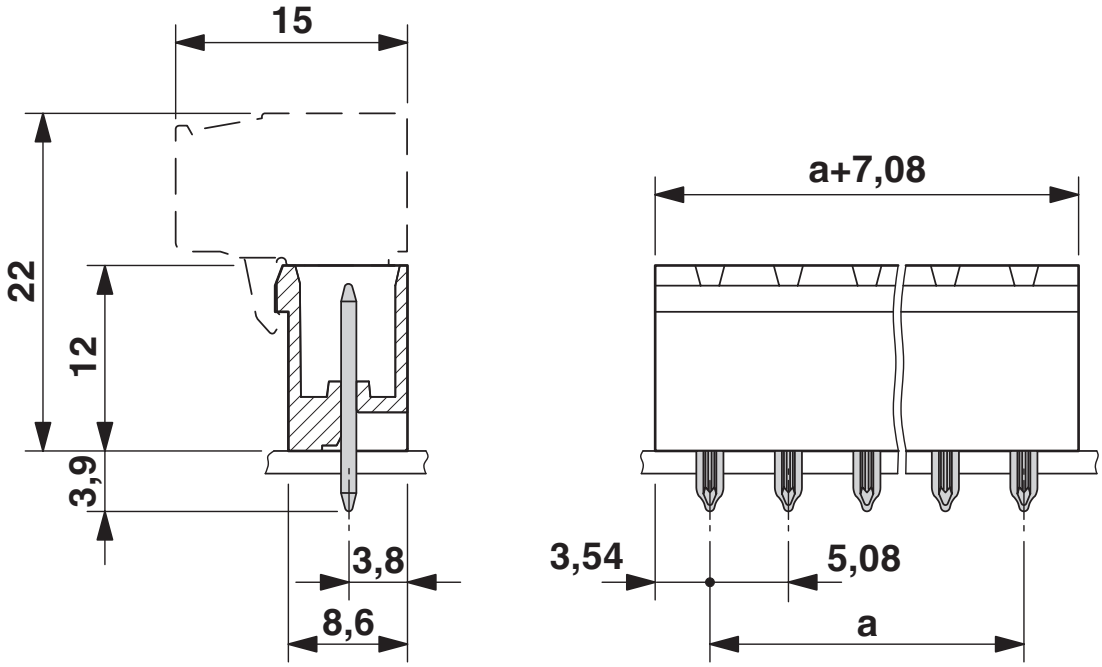

Drilling plan/solder pad geometry

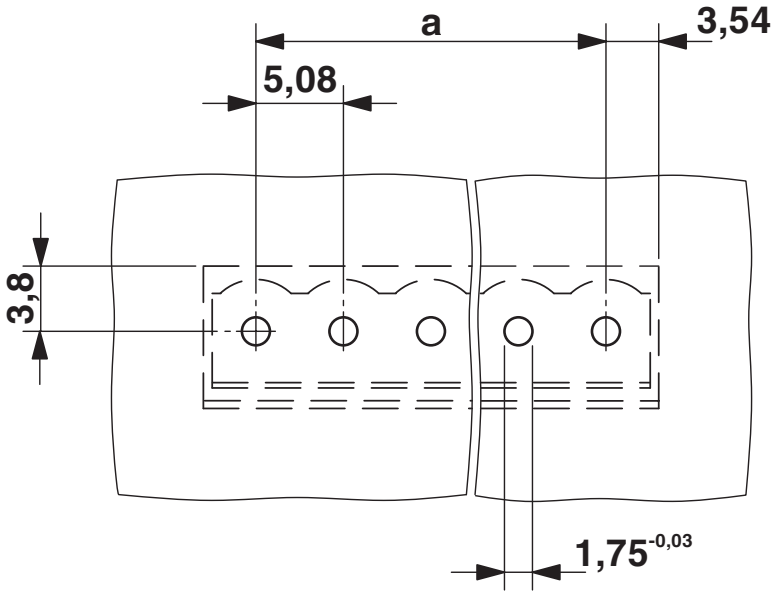

Diagram

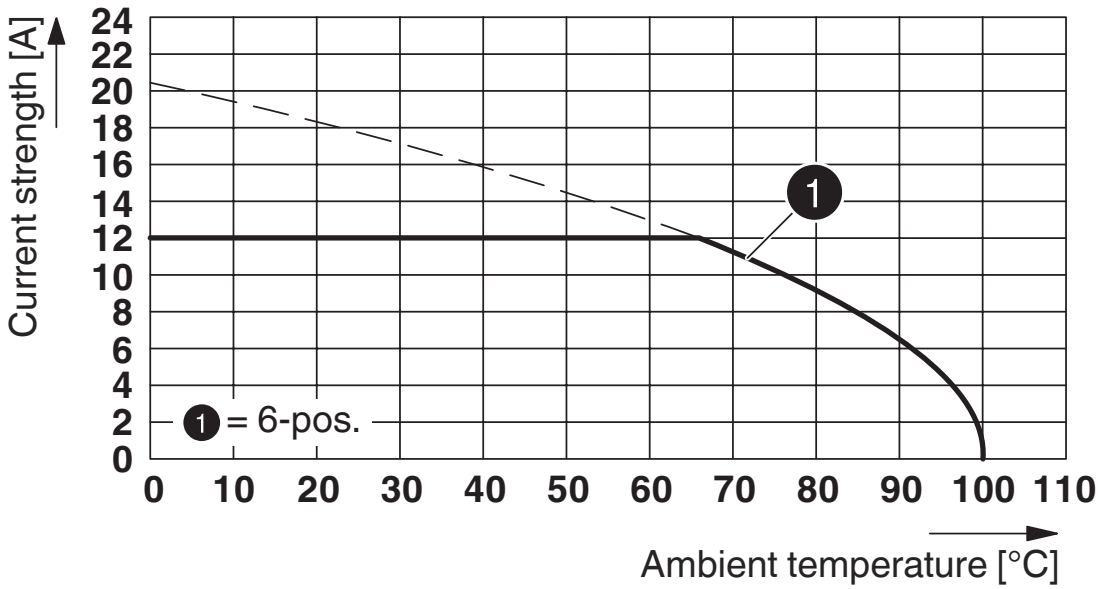

Type: MSTB 2,5/..-ST(-5,08) with EMSTBVA 2,5/...-G(-5,08)

Drilling plan/solder pad geometry

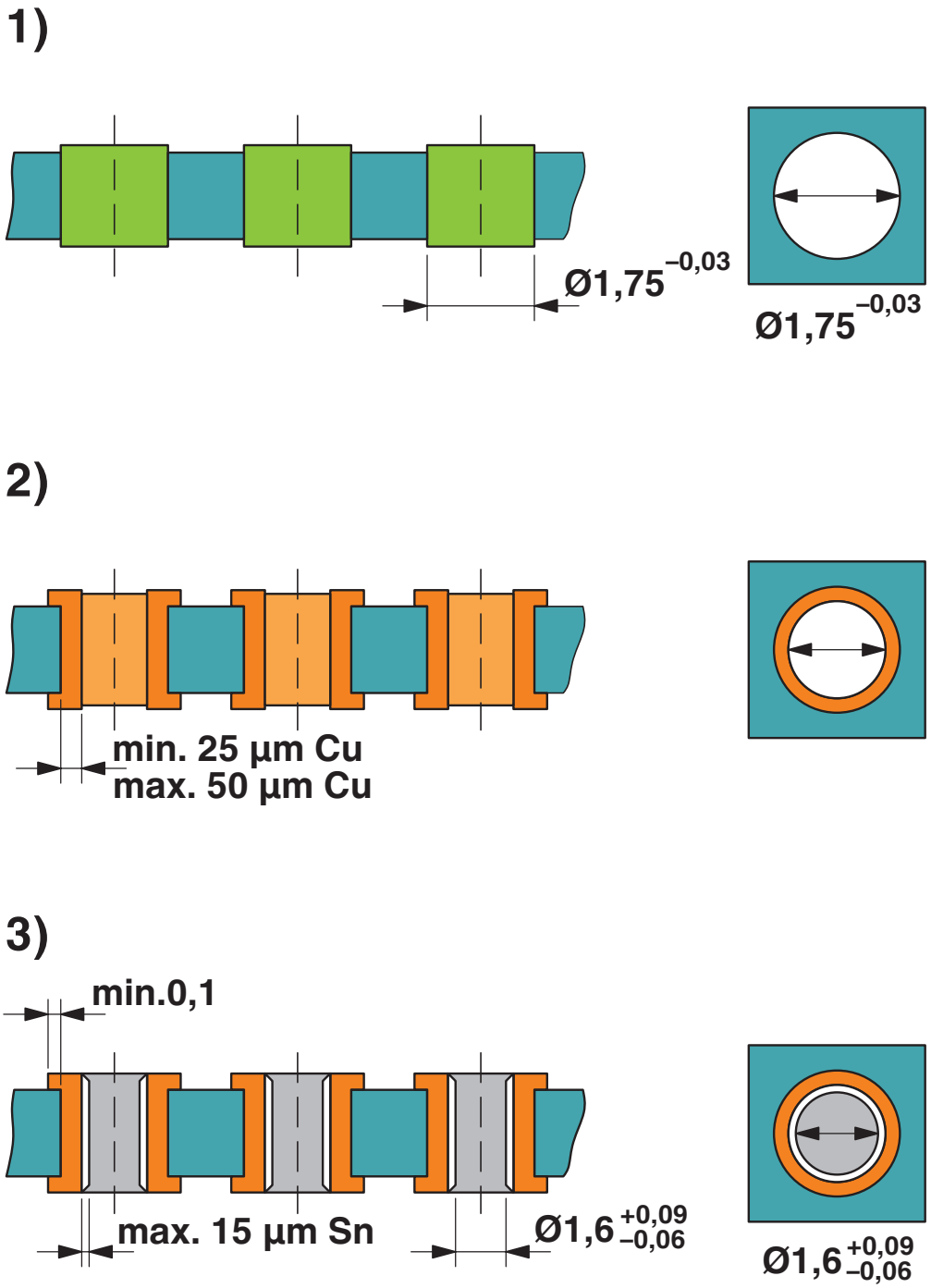

Drill hole layout in FR4 or EP-GC basic material

Environmental product compliance

EU RoHS

Fulfills EU RoHS substance requirements	Yes, No exemptions

China RoHS

Environment friendly use period (EFUP)	EFUP-E
	No hazardous substances above the limits

EU REACH SVHC

REACH candidate substance (CAS No.)	No substance above 0.1 wt%

Phoenix Contact 2024 © - all rights reserved
https://www.phoenixcontact.com

PHOENIX CONTACT GmbH & Co. KG
Flachsmarktstraße 8
D-32825 Blomberg
+49 (0) 5235-3 00
info@phoenixcontact.com