UKH 70-3L-F - High-current terminal block

3076484

https://www.phoenixcontact.com/pc/products/3076484

Please be informed that the data shown in this PDF document is generated from our online catalog. Please find the complete data in the user documentation. Our general terms of use for downloads are valid.

High-current terminal block, nom. voltage: 1000 V, nominal current: 192 A, number of connections: 6, number of positions: 3, connection method: Screw connection, Rated cross section: 70 mm^2, cross section: 16 mm^2 - 95 mm^2, mounting type: direct screw connection, color: gray

Your advantages

- Reliable cable connection is ensured by three-point centering of the conductor in the prismatic sleeve base
- Low contact resistance of the contact surface due to ribbing
- Screw locking by means of spring-loaded elements in the clamping part

Commercial data

Item number	3076484
Packing unit	4 pc
Minimum order quantity	4 pc
Product key	BE1311
Catalog page	Page 191 (C-1-2019)
GTIN	4046356654067
Weight per piece (including packing)	472.275 g
Weight per piece (excluding packing)	472.275 g
Customs tariff number	85369010
Country of origin	CN

Technical data

Product properties

Product type	High current terminal block
Number of positions	3
Number of connections	6
Number of rows	1
Potentials	3

Insulation characteristics

Overvoltage category	III
Degree of pollution	3

Electrical properties

Rated surge voltage	8 kV
Maximum power dissipation for nominal condition	6.27 W

Connection data

Number of connections per level	6
Nominal cross section	70 mm²

Level 1 above 1 below 1

Screw thread	M8
Tightening torque	8 ... 10 Nm
Stripping length	24 mm
Internal cylindrical gage	A11
Connection in acc. with standard	IEC 60947-7-1
Conductor cross section rigid	16 mm² ... 95 mm²
Cross section AWG	4 ... 3/0 (converted acc. to IEC)
Conductor cross section flexible	25 mm² ... 70 mm²
Conductor cross section, flexible [AWG]	3 ... 2/0 (converted acc. to IEC)
Conductor cross-section flexible (ferrule without plastic sleeve)	16 mm² ... 70 mm²
Flexible conductor cross section (ferrule with plastic sleeve)	16 mm² ... 70 mm²
2 conductors with same cross section, solid	16 mm² ... 25 mm²
2 conductors with same cross section, flexible	16 mm² ... 25 mm²
2 conductors with same cross section, flexible, with ferrule without plastic sleeve	16 mm² ... 25 mm²
Nominal current	192 A
Maximum load current	192 A (in case of a 70 mm² conductor cross section, the maximum load current must not be exceeded by the total current of all connected conductors.)
Nominal voltage	1000 V
Note	Note: Product releases, connection cross sections and notes on connecting aluminum cables can be found in the download area.
Nominal cross section	70 mm²

Dimensions

Dimensional drawing	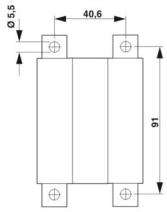
Width	60.9 mm
Height	80 mm

Material specifications

Color	gray
Flammability rating according to UL 94	V0
Insulating material group	I
Insulating material	PA
Static insulating material application in cold	-60 °C
Temperature index of insulation material (DIN EN 60216-1 (VDE 0304-21))	130 °C
Relative insulation material temperature index (Elec., UL 746 B)	130 °C
Fire protection for rail vehicles (DIN EN 45545-2) R22	HL 1 - HL 3
Fire protection for rail vehicles (DIN EN 45545-2) R23	HL 1 - HL 3
Fire protection for rail vehicles (DIN EN 45545-2) R24	HL 1 - HL 3
Fire protection for rail vehicles (DIN EN 45545-2) R26	HL 1 - HL 3
Calorimetric heat release NFPA 130 (ASTM E 1354)	28 MJ/kg
Surface flammability NFPA 130 (ASTM E 162)	passed
Specific optical density of smoke NFPA 130 (ASTM E 662)	passed
Smoke gas toxicity NFPA 130 (SMP 800C)	passed

Electrical tests

Surge voltage test

Test voltage setpoint	9.8 kV
Result	Test passed

Temperature-rise test

Requirement temperature-rise test	Increase in temperature ≤ 45 K
Result	Test passed
Short-time withstand current 70 mm²	8.4 kA
Result	Test passed

Power-frequency withstand voltage

Test voltage setpoint	2.2 kV
Result	Test passed

Mechanical properties

Mechanical data

Open side panel	No

Mechanical tests

Mechanical strength

Result	Test passed

Attachment on the carrier

DIN rail/fixing support	NS 32/NS 35
Test force setpoint	10 N
Result	Test passed

Test for conductor damage and slackening

Rotation speed	10 (+/- 2) rpm
Revolutions	135
Conductor cross section/weight	16 mm² / 2.9 kg
	70 mm²/10.4 kg
	95 mm²/14 kg
Result	Test passed

Environmental and real-life conditions

Needle-flame test

Time of exposure	30 s
Result	Test passed

Oscillation/broadband noise

Specification	DIN EN 50155 (VDE 0115-200):2022-06
Spectrum	Service life test category 2, bogie-mounted
Frequency	f_1 = 5 Hz to f_2 = 250 Hz
ASD level	6.12 (m/s²)²/Hz
Acceleration	3.12g
Test duration per axis	5 h
Test directions	X-, Y- and Z-axis
Result	Test passed

Shocks

Specification	DIN EN 50155 (VDE 0115-200):2022-06
Pulse shape	Half-sine
Acceleration	5g
Shock duration	30 ms
Number of shocks per direction	3
Test directions	X-, Y- and Z-axis (pos. and neg.)
Result	Test passed

Ambient conditions

Ambient temperature (storage/transport)	-25 °C ... 60 °C (for a short time, not exceeding 24 h, -60 °C to +70 °C)
Ambient temperature (assembly)	-5 °C ... 70 °C
Ambient temperature (actuation)	-5 °C ... 70 °C
Permissible humidity (storage/transport)	30 % ... 70 %

Standards and regulations

Connection in acc. with standard	IEC 60947-7-1

Mounting

Mounting type	direct screw connection

Drawings

Schematic diagram

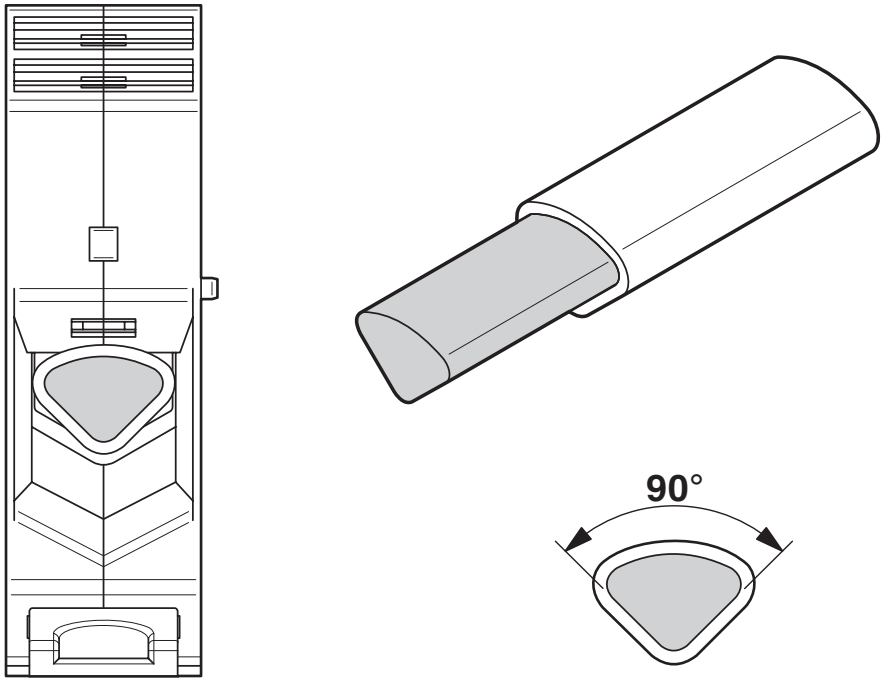

Connecting aluminum cables. Further notes can be found in the download area

Circuit diagram

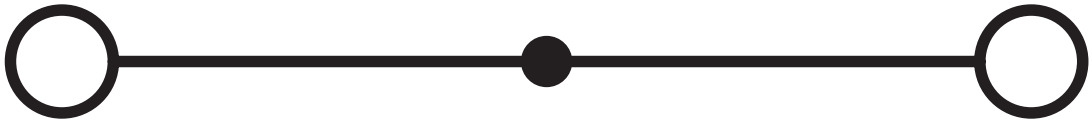

Dimensional drawing

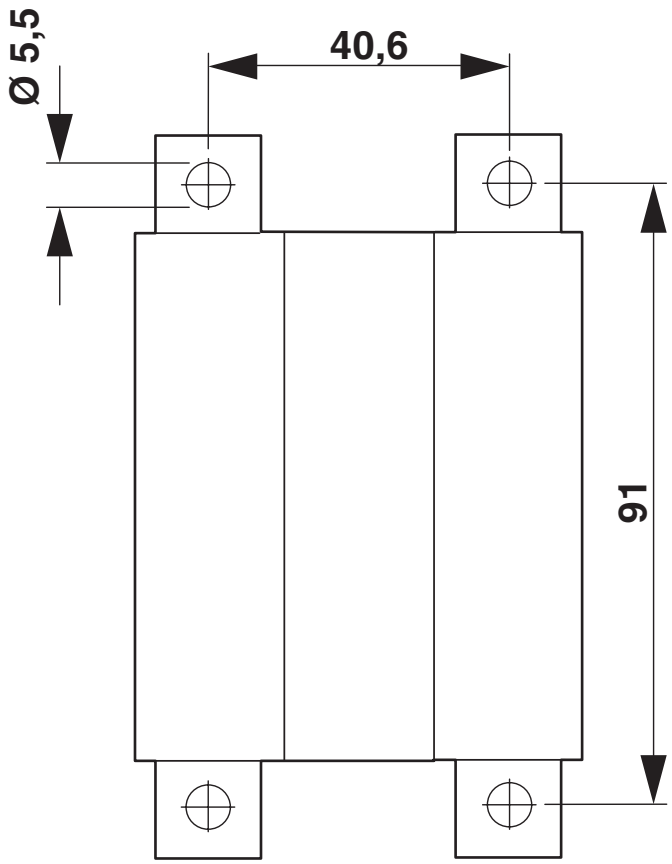

Classifications

ECLASS

ECLASS-11.0	27141120

ETIM

ETIM 8.0	EC000897

UNSPSC

UNSPSC 21.0	39121400

Environmental product compliance

EU RoHS

Fulfills EU RoHS substance requirements	Yes, No exemptions

China RoHS

Environment friendly use period (EFUP)	EFUP-E
	No hazardous substances above the limits

EU REACH SVHC

REACH candidate substance (CAS No.)	No substance above 0.1 wt%

Accessories

Note: Applying some accessories below might limit this product.

FBI 2-20 N - Fixed bridge

3213195

https://www.phoenixcontact.com/pc/products/3213195

Fixed bridge, pitch: 20 mm, number of positions: 2, color: silver

Max. current carrying capacity: 192 A

FBI 3-20 N - Fixed bridge

3213205

https://www.phoenixcontact.com/pc/products/3213205

Fixed bridge, pitch: 20 mm, number of positions: 3, color: silver

Max. current carrying capacity: 192 A

FBI 2-20 N EX - Fixed bridge

3213210

https://www.phoenixcontact.com/pc/products/3213210

Fixed bridge, number of positions: 2, color: silver

Max. current carrying capacity: 180 A

FBI 3-20 N EX - Fixed bridge

3213211

https://www.phoenixcontact.com/pc/products/3213211

Fixed bridge, number of positions: 3, color: silver

Max. current carrying capacity: 180 A

AGK 10-UKH 50 - Pick-off terminal block

3001763

https://www.phoenixcontact.com/pc/products/3001763

Pick-off terminal block, nom. voltage: 1000 V, nominal current: 57 A, number of connections: 1, connection method: Screw connection, Rated cross section: 10 mm^2, cross section: 0.5 mm^2 - 10 mm^2, color: gray

UKH 50 EP - Insertion profile

3009228

https://www.phoenixcontact.com/pc/products/3009228

Insertion profile, color: silver

X-PEN 0,35 - Marker pen

0811228

https://www.phoenixcontact.com/pc/products/0811228

Marker pen without ink cartridge, for manual labeling of markers, labeling extremely wipe-proof, line thickness 0.35 mm

SF-THEX 6-200 - Screwdriver

1212642

https://www.phoenixcontact.com/pc/products/1212642

T-handle screwdriver, for Allen screws, hexagonal (with chamfer), size: hex 6 x 200 mm, ergonomically shaped handle, matt chrome-plated

WS-2K - Warning label

1004513

https://www.phoenixcontact.com/pc/products/1004513

Adhesive warning plate, self-adhesive, black print: lightning flash with mixed verson - "Vorsicht Spannung - Attention Danger" size of label: 32 x 26 mm

WS-4K - Warning label

1004584

https://www.phoenixcontact.com/pc/products/1004584

Adhesive warning plate, self-adhesive, black print: lightning flash with mixed verson - "Vorsicht Spannung - Attention Danger" size of label: 13 x 23.5 mm

ZB 10:UNBEDRUCKT - Zack marker strip

1053001

https://www.phoenixcontact.com/pc/products/1053001

Zack marker strip, Strip, white, unlabeled, can be labeled with: PLOTMARK, CMS-P1-PLOTTER, mounting type: snapped, for terminal block width: 10.2 mm, lettering field size: 10.5 x 10.15 mm, Number of individual labels: 10

ZB 10 CUS - Zack marker strip

0824941

https://www.phoenixcontact.com/pc/products/0824941

Zack marker strip, can be ordered: Strip, white, labeled according to customer specifications, mounting type: snap into tall marker groove, for terminal block width: 10.2 mm, lettering field size: 10,15 x 10,5 mm, Number of individual labels: 10

ZB10,LGS:FORTL.ZAHLEN - Zack marker strip

1053014

https://www.phoenixcontact.com/pc/products/1053014

Zack marker strip, Strip, white, labeled, can be labeled with: CMS-P1-PLOTTER, printed horizontally: consecutive numbers 1 ... 10, 11 ... 20, etc. up to 91 ... 100, mounting type: snapped, for terminal block width: 10.2 mm, lettering field size: 10,15 x 10,5 mm, Number of individual labels: 10

ZB10,QR:FORTL.ZAHLEN - Zack marker strip

1053027

https://www.phoenixcontact.com/pc/products/1053027

Zack marker strip, Strip, white, labeled, can be labeled with: CMS-P1-PLOTTER, Printed vertically: consecutive numbers 1 ... 10, 11 ... 20, etc. up to 91 ... 100, mounting type: snapped, for terminal block width: 10.2 mm, lettering field size: 10,15 x 10,5 mm, Number of individual labels: 10

ZB10,LGS:L1-N,PE - Marker for terminal blocks

1053412

https://www.phoenixcontact.com/pc/products/1053412

Marker for terminal blocks, Strip, white, labeled, can be labeled with: CMS-P1-PLOTTER, horizontal: L1, L2, L3, N, PE, L1, L2, L3, N, PE, mounting type: snapped, for terminal block width: 10.2 mm, lettering field size: 10,15 x 10,5 mm, Number of individual labels: 10

ZB10,LGS:U-N - Marker for terminal blocks

1053438

https://www.phoenixcontact.com/pc/products/1053438

Marker for terminal blocks, Strip, white, labeled, can be labeled with: CMS-P1-PLOTTER, horizontal: U, V, W, N, GND, U, V, W, N, GND, mounting type: snapped, for terminal block width: 10.2 mm, lettering field size: 10,15 x 10,5 mm, Number of individual labels: 10

UC-TM 10 - Marker for terminal blocks

0818069

https://www.phoenixcontact.com/pc/products/0818069

Marker for terminal blocks, Sheet, white, unlabeled, can be labeled with: BLUEMARK ID COLOR, BLUEMARK ID, BLUEMARK CLED, PLOTMARK, CMS-P1-PLOTTER, mounting type: snapped, for terminal block width: 10.2 mm, lettering field size: 9.6 x 10.5 mm, Number of individual labels: 48

UC-TM 10 CUS - Marker for terminal blocks

0824605

https://www.phoenixcontact.com/pc/products/0824605

Marker for terminal blocks, can be ordered: by sheet, white, labeled according to customer specifications, mounting type: snap into tall marker groove, for terminal block width: 10.2 mm, lettering field size: 9.6 x 10.5 mm, Number of individual labels: 48

UCT-TM 10 - Marker for terminal blocks

0829142

https://www.phoenixcontact.com/pc/products/0829142

Marker for terminal blocks, Sheet, white, unlabeled, can be labeled with: TOPMARK NEO, TOPMARK LASER, BLUEMARK ID COLOR, BLUEMARK ID, BLUEMARK CLED, THERMOMARK PRIME, THERMOMARK CARD 2.0, THERMOMARK CARD, mounting type: snapped, for terminal block width: 10.2 mm, lettering field size: 8.9 x 9.6 mm, Number of individual labels: 36

UCT-TM 10 CUS - Marker for terminal blocks

0829623

https://www.phoenixcontact.com/pc/products/0829623

Marker for terminal blocks, can be ordered: by sheet, white, labeled according to customer specifications, mounting type: snap into tall marker groove, for terminal block width: 10.2 mm, lettering field size: 8.9 x 9.6 mm, Number of individual labels: 36

TMT 10 R - Marker for terminal blocks

0816210

https://www.phoenixcontact.com/pc/products/0816210

Marker for terminal blocks, Roll, white, unlabeled, can be labeled with: THERMOMARK ROLL 2.0, THERMOMARK ROLL, THERMOMARK ROLL X1, THERMOMARK ROLLMASTER 300/600, THERMOMARK X1.2, THERMOMARK S1.1, perforated, mounting type: snapped, snap into flat marker groove, for terminal block width: 10.2 mm, lettering field size: 6.35 x 10.15 mm, Number of individual labels: 10000

TMT 10 R CUS - Marker for terminal blocks

0824500

https://www.phoenixcontact.com/pc/products/0824500

Marker for terminal blocks, can be ordered: by line, white, labeled according to customer specifications, mounting type: snap into universal marker groove, snap into flat marker groove, for terminal block width: 10.2 mm, lettering field size: 6.35 x 10.15 mm

Phoenix Contact 2024 © - all rights reserved
https://www.phoenixcontact.com

PHOENIX CONTACT GmbH & Co. KG
Flachsmarktstraße 8
D-32825 Blomberg
+49 (0) 5235-3 00
info@phoenixcontact.com