SIEMENS

Data sheet US2:52PR8BTXB

	30mm Command/52, Chrome Finish Heavy Duty,Watertight/Oiltight Metal Operator, Round Illuminated Twist-to-Release Full Voltage, 6V AC LED Lamp Mushroom Head Cap Small 1.79" (45 mm) Plastic Cap, Amber 2 Position Maintained, Twist-to-Release UL Listed, CSA Certified NEMA 1,3,3R,4,4X,12,13 & Automotive Standards
design of the product	Actuator round
Enclosure	
number of command points	1
delivery state as a kit	No
Actuator	
product extension optional light source	Yes
color of the actuating element	amber
material of the actuating element	plastic
type of unlocking device	rotate-to-unlatch mechanism
number of switching positions	2
Front ring	
product component front ring	Yes
design of the front ring	standard
material of the front ring	metal
color of the front ring	chrome
Holder	
material of the holder	Metal
Contact block/ lampholder	
socket design	BA 9s with LED
number of lampholders	1
Display	
number of LED modules	1
General technical data	
product component	
● lamp transformer	No
● light source	Yes
degree of pollution	1
type of voltage	
● of the operating voltage	AC/DC
● of the input voltage	AC/DC
surge voltage resistance rated value	4 kV
protection class IP	IP66
● of the terminal	IP20
Supply voltage	
type of voltage of the supply voltage of the light source	AC/DC
supply voltage of the light source at AC at 60 Hz	
● rated value	8 ... 6 V
supply voltage of the light source at DC	
● rated value	8 ... 6 V
Connections/ Terminals	
type of electrical connection	screw-type terminals
● of modules and accessories	Screw-type terminal
tightening torque of the screws in the bracket	20 N·m
tightening torque [lbf·in] with screw-type terminals	8 ... 8 lbf·in
Lamp	
type of light source	LED
color of the light source	yellow
Safety related data	

Subject to change without notice
© Copyright Siemens

touch protection against electrical shock	finger-safe
Ambient conditions	
ambient temperature	
● during operation	-35 ... +70 °C
● during storage	-40 ... +85 °C
Installation/ mounting/ dimensions	
shape of the installation opening	round
Certificates/ approvals	
Further information	

Siemens has decided to exit the Russian market (see here).
https://press.siemens.com/global/en/pressrelease/siemens-wind-down-russian-business

Siemens is working on the renewal of the current EAC certificates.
Please contact your local Siemens office on the status of validity of the EAC certification if you intend to import or offer to supply these products to an EAC relevant market (other than the sanctioned EAEU member states Russia or Belarus).

Information on the packaging
https://support.industry.siemens.com/cs/ww/en/view/109813875

Information- and Downloadcenter (Catalogs, Brochures,…)
https://www.siemens.com/ic10

Industry Mall (Online ordering system)
https://mall.industry.siemens.com/mall/en/en/Catalog/product?mlfb=US2:52PR8BTXB

Cax online generator
http://support.automation.siemens.com/WW/CAXorder/default.aspx?lang=en&mlfb=US2:52PR8BTXB

Service&Support (Manuals, Certificates, Characteristics, FAQs,...)
https://support.industry.siemens.com/cs/ww/en/ps/US2:52PR8BTXB

Image database (product images, 2D dimension drawings, 3D models, device circuit diagrams, EPLAN macros, ...)
http://www.automation.siemens.com/bilddb/cax_de.aspx?mlfb=US2:52PR8BTXB&lang=en

Subject to change without notice
© Copyright Siemens

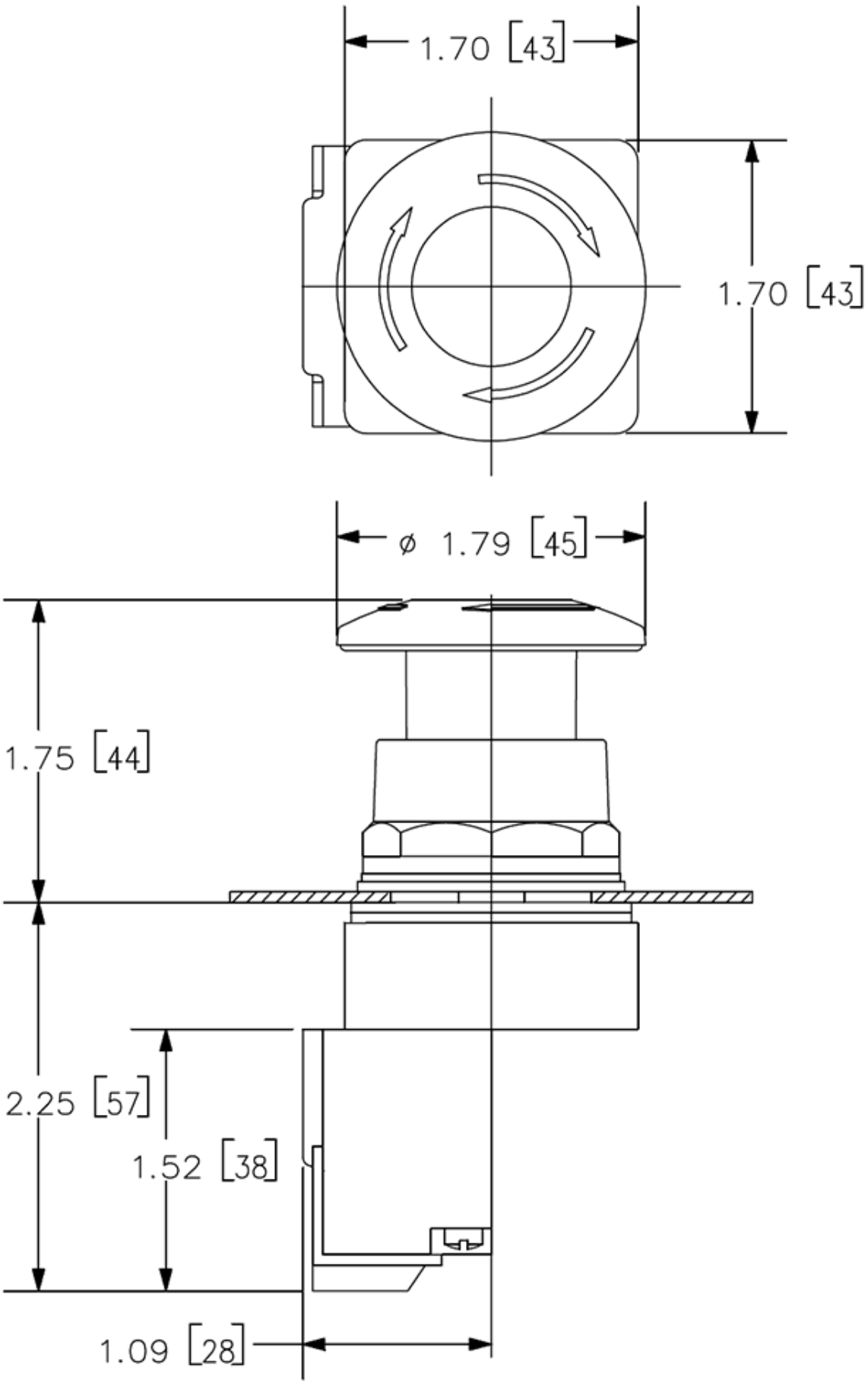

last modified: 5/31/2021

Subject to change without notice
© Copyright Siemens

Subject to change without notice
© Copyright Siemens