Product data sheet

Specifications

Operating mechanism, flange mounted, variable depth, handle mechanism, 6in handle, NEMA 4X enclosure

9422A2

Product availability: Stock - Normally stocked in distribution facility

Price*: 301.50 USD

Main

Product	Handle Mechanism
For Use With	Disconnect switches (30...200 A)

Complementary

Product Type	Variable depth
Product destination	disconnect switches (30...200 A)
Enclosure Types	NEMA 4/4X enclosures
Handle Length	6 in (152.4 mm)

Ordering and shipping details

Category	US10CP121732
Discount Schedule	0CP1
GTIN	785901739807
Returnability	Yes
Country of origin	MX

Packing Units

Unit Type of Package 1	PCE
Number of Units in Package 1	1
Package 1 Height	1.800 in (4.572 cm)
Package 1 Width	3.800 in (9.652 cm)
Package 1 Length	9.50 in (24.13 cm)
Package 1 Weight	2.80 lb(US) (1.27 kg)

Contractual warranty

Warranty	18 months

Price is “List Price” and may be subject to a trade discount – check with your local distributor or retailer for actual price.

Disclaimer: This documentation is not intended as a substitute for and is not to be used for determining suitability or reliability of these products for specific user applications

Sustainability

Green Premium™ label is Schneider Electric's commitment to delivering products with best-in-class environmental performance. Green Premium promises compliance with the latest regulations, transparency on environmental impacts, as well as circular and low-CO_2 products.

Guide to assessing product sustainability is a white paper that clarifies global eco-label standards and how to interpret environmental declarations.

Learn more about Green Premium >

Guide to assess a product's sustainability >

Well-being performance

Reach Free Of Svhc	
Toxic Heavy Metal Free	
Mercury Free	
Rohs Exemption Information	Yes
Pvc Free	

Reach Regulation	REACh Declaration
Eu Rohs Directive	Compliant EU RoHS Declaration
China Rohs Regulation	China RoHS declaration Pro-active China RoHS declaration (out of China RoHS legal scope)
California Proposition 65	WARNING: This product can expose you to chemicals including: Lead and lead compounds, which is known to the State of California to cause cancer and birth defects or other reproductive harm. For more information go to www.P65Warnings.ca.gov

Dimensions Drawings
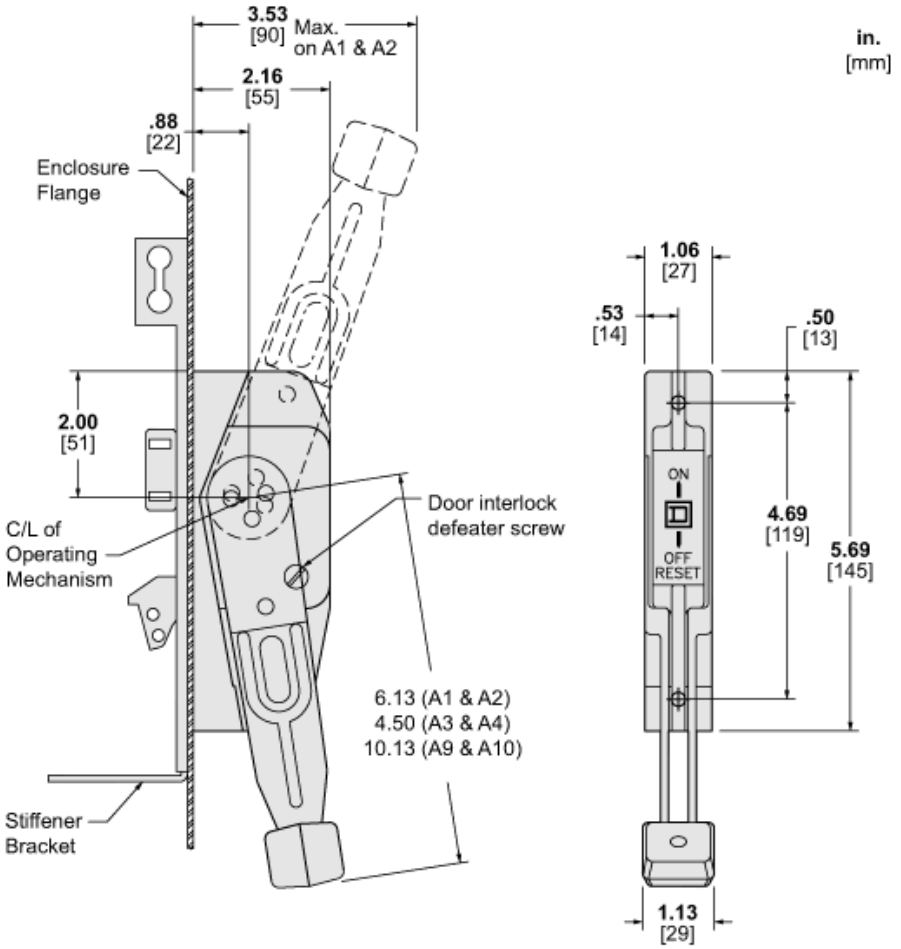
Approximate Dimensions