IDEC

*Think Automation and beyond...*

# ø22 mm
# CW Series Flush Silhouette Switches

## Double contact block

Only 59.9 mm behind the panel

## Single contact block

Shortest in its class

Only 39.9 mm behind the panel

IDEC CORPORATION

GOOD DESIGN

# Safety in style and

## ø22 mm CW Series
## Flush Silhouette Switches

Double Contact Block

### New double contact blocks with four-contact configurations.

(Illuminated pushbuttons, pushbuttons, selector switches, key selector switches)

Double contact blocks

Single contact blocks

Shortest in its class (as of March 2013)

### Short depth behind the panel for compact equipment.

Double: 59.9 mm (maintained: 64.6 mm)  Single: 39.9 mm (maintained: 44.6 mm)

Switching capacity is 120V AC, 10A (resistive load). The compact style requires less depth behind the panel.
Can be used with IDEC's FB and other 22 mm control boxes. No transformer needed for any voltage.

Double contact block

59.9 mm

Single contact block

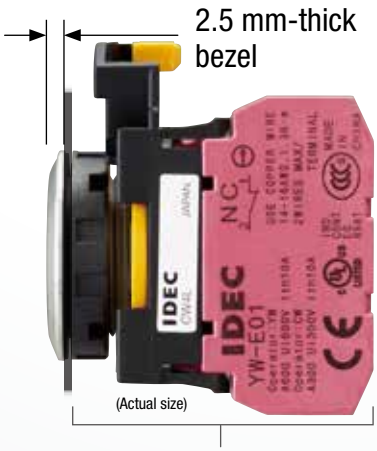


39.9 mm

Fits in small space

*Four-contact illuminated pushbutton*

Conventional

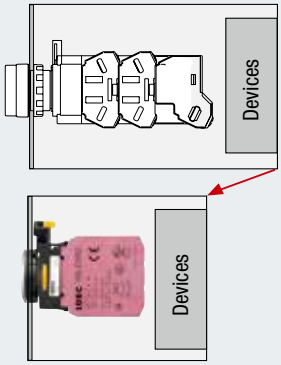


40% less space
50% less weight

CW series double contact block

*Two-contact illuminated pushbutton*

Conventional

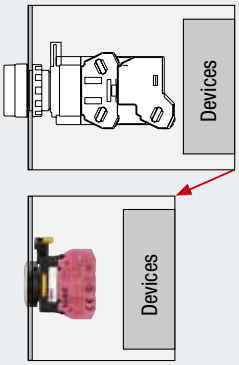


50% less space
59% less weight

CW series single contact block

# sophistication

## Sleek and stylish switches and pilot lights with a 2.5 mm-thick bezel

The CW series gives a sleek, stylish image to your machines or control panels. The surface is safer with less chance of unexpected operation or accidents by hitting the projections, and also is cleaner with less dust build-up.

Safety

## Third-generation safety construction

### Two-action removal of contact blocks

IDEC's original two-action push-turn locking lever provides a higher level of safety by preventing unexpected release of the locking lever. Whether the contact block is installed securely can be checked easily from the back of the panel, with the position of the locking lever.

### Locking lever integrated with guard

Prevents locking lever from unexpected release or damage by trapped wires.

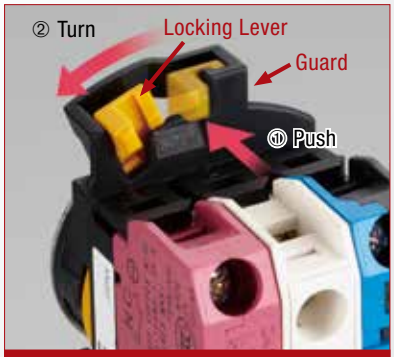


Removing contact blocks

### IP20 Finger-safe Terminal

Finger-safe, IP20 terminal prevents electrical shock.

## Variety

Illuminated Pushbuttons (round flush or extended)

See page 8.

Pilot lights (round flush or extended)

See page 10.

Pushbuttons (round flush or extended)

See page 11.

Selector Switches (knob or lever) 2- and 3-position

Knob Lever

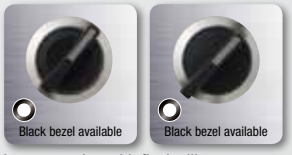


Low extension with flush silhouette.

See page 12.

Key Selector Switches Wave key 7 different key numbers

See page 14.

Hard to duplicate, wave-key ensures a high level of safety.

## Colors

**Illuminated Pushbuttons/Pilot Lights**

Amber (A) · Blue (S) · Green (G) · Red (R) · Pure White (PW) · Yellow (Y)

**Pushbuttons**

Black · Blue · Green · Red · White · Yellow

**Bezels**

Metallic · Black (plastic)

# ø22 Flush Silhouette Switches CW Series

## Flush bezel projects only 2.5 mm from front of panel
## Only 39.9 mm depth behind the panel (single contact block, momentary).

- ø22.3 mm mounting hole compliant with IEC 60947-5-1
- 3.5-mm operator travel for pushbuttons ensures comfortable and reliable operation.
- Black plastic and metallic bezels available.
- Four-contact configuration is available with double contact blocks.
- Direct opening NC contact ensures shutdown without failure.
- Seven different keys can be chosen for key selector switches.
- 10A contact rating. Up to three contact blocks for non-illuminated and two contact blocks for illuminated units can be connected.
- Contact blocks can be removed by the two-action locking lever integrated with a guard, ensuring safety.
- IP20 finger-safe screw terminals
- IP66/67, UL Type 4X degree of protection from panel front (see Table 1).

| Applicable Standards | Mark | File No. or Organization |
|---|---|---|
| UL508<br>CSA C22.2 No.14 | c UL us LISTED | UL/c-UL File No. E68961 |
| EN60947-5-1 | CE | EU Low Voltage Directive |
| GB14048.5 | CCC | No. 2012010305589209<br>(Pilot lights: No. 2012010304567962) |

## Contact Ratings

| | | | | | | |
|---|---|---|---|---|---|---|
| Rated Insulation Voltage (Ui) | | | | 300V | | |
| Rated Thermal Current (Ith) | | | | 10A | | |
| Rated Operating Voltage (Ue) | | | | 24V | 120V | 240V |
| Rated Operating Current (Ie) | Electrical Life 50,000 operations | AC 50/60 Hz | Resistive Load (AC-12) | 10A | 10A | 6A |
| | | | Inductive Load (AC-15) | 10A | 6A | 3A |
| | | DC | Resistive Load (DC-12) | 8A | 2.2A | 1.1A |
| | | | Inductive Load (DC-13) | 4A | 1.1A | 0.55A |
| | Electrical Life 100,000 operations | AC 50/60 Hz | Resistive Load (AC-12) | 5A | 5A | 3A |
| | | | Inductive Load (AC-15) | 5A | 3A | 1.5A |
| | | DC | Resistive Load (DC-12) | 4A | 1.1A | 0.55A |
| | | | Inductive Load (DC-13) | 2A | 0.55A | 0.27A |
| Contact Material | | | | Silver | | |

- Minimum applicable load (reference value): 3V AC/DC, 5 mA
  (Applicable range is subject to the operating conditions and load.)

Note: The operational current represents the classification by making and breaking currents (IEC 60947-5-1).

- UL, c-UL rating: A300, CCC rating: A300

### Table 1 (Degree of Protection)

| | IP65 | IP66 | IP67 | UL Type 4X |
|---|---|---|---|---|
| Illuminated Pushbutton | Yes | Yes (Note) | Yes (Note) | Yes (Note) |
| Pilot Light | Yes | Yes | No | Yes |
| Pushbutton | Yes | Yes (Note) | Yes (Note) | Yes (Note) |
| Selector Switch | Yes | Yes | Yes | Yes |
| Key Selector Switch | Yes | Yes | No | Yes |

Note: When used with rubber boot (CW9Z-D11, -D12)

## Specifications

| | | |
|---|---|---|
| Operating Temperature | Non-illuminated: –25 to +60°C (no freezing)<br>LED illuminated: –25 to +55°C (no freezing) | |
| Operating Humidity | 45 to 85% RH (no condensation) | |
| Storage Temperature | –40 to +80°C (no freezing) | |
| Contact Resistance | 50 mΩ maximum (initial value) | |
| Insulation Resistance | 100 MΩ minimum (500V DC megger) | |
| Overvoltage Category | II (IEC 60664-1) | |
| Impulse Withstand Voltage | 2.5 kV (IEC 60664-1/60947-5-1) | |
| Pollution Degree | 3 (IEC 60947-5-1) | |
| Vibration Resistance | Operating extremes: 5 to 55Hz, amplitude 0.5 mm<br>Damage limits: 30 Hz, amplitude 1.5 mm | |
| Shock Resistance | Operating extremes: 100 m/s$^2$<br>Damage limits: 1000 m/s$^2$ | |
| Mechanical Life (minimum operations) | Illuminated pushbutton/pushbutton<br>Momentary: 2,000,000 (single contact block)<br>1,000,000 (double contact block)<br>Maintained: 250,000 (single contact block)<br>100,000 (double contact block)<br>Selector switch: 250,000 (single contact block)<br>100,000 (double contact block)<br>Key selector switch: 250,000 (single contact block)<br>100,000 (double contact block) | |
| Electrical Life (minimum operations) | Single contact block | 50,000 (see Contact Ratings)<br>100,000 (see Contact Ratings) |
| | Double contact block | 25,000 (see Contact Ratings)<br>50,000 (see Contact Ratings) |
| | Switching frequency<br>Momentary: 1800 operations/h<br>Maintained: 900 operations/h | |
| Degree of Protection (IEC 60529) | Panel front: See table to the left<br>Terminal: IP20 (IEC 60529) | |
| Short-circuit Protection | 250V/10A fuse<br>(Type aM IEC 60269-1, IEC 602069-2) | |
| Electrical Shock Protection | Class II (IEC 61140) | |
| Terminal Style | Screw terminal (M3.5 slotted Phillips screw)<br>(Ring terminal cannot be used.) | |
| Bezel Material | Polyamide | |
| Applicable Wire Size | Up to 2 wires of 2 mm$^2$ (solid wire ø1.6) maximum (14 to 16AWG) | |
| Recommended Tightening Torque | Terminal: 1.0 to 1.3 N·m<br>Locking ring: 1.2 N·m | |

## Weight (Examples)

| | |
|---|---|
| Illuminated Pushbutton | 46g (CW1L-M1E02QH, 2 contacts)<br>62g (CW1L-M1E22QH, 4 contacts) |
| Pilot Light | 27g (CW1P-1EQH) |
| Pushbutton | 45g (CW1B-M1E03, 3 contacts)<br>52g (CW1B-M1E22, 4 contacts) |
| Selector Switch | 48g (CW1S-2E03, 3 contacts)<br>55g (CW1S-2E22, 4 contacts) |
| Key Selector Switch | 61g (CW1K-2AE03, 3 contacts)<br>68g (CW1K-2AE22, 4 contacts) |

## Direct Opening of Key Selector Switch

| Applicable Type | 2-position (3NC) | 3-position (2NC) |
|---|---|---|
| Minimum Operator Angle for Direct Opening Action | 90° | 45° |
| Minimum Operator Torque for Direct Opening Action | 0.2 N·m | 0.3 N·m |
| Maximum Operator Angle | 90° | 45° |

## LED Module

| | | | | | | |
|---|---|---|---|---|---|---|
| Rated Insulation Voltage (Ui) | 250V | | | | | |
| Rated Operating Voltage (Ue) | 6V AC/DC | 12V AC/DC | 24V AC/DC | 100/120V AC (50/60 Hz sine wave) | 200/220V AC (50/60 Hz sine wave) | 230/240V AC (50/60 Hz sine wave) |
| Operating Voltage Range | 6V AC/DC±10% | 12V AC/DC ±10% | 24V AC/DC ±10% | 100/120V AC ±10% | 200/220V AC ±10% | 230/240V AC ±10% |
| Illumination Color Code ② | A (amber), G (green), PW (pure white), R (red), S (blue) | | | | | |
| LED Module Part No. | CW-EAQ2② | CW-EAQ3② | CW-EAQ4② | CW-EAQH② | CW-EAQM② | CW-EAQM4② |
| Current Draw | 15 mA | 15 mA | 16.5 mA | 18 mA | 20 mA | 18 mA |
| Life (reference value) | Approx. 30,000 hours<br>(the illuminance is reduced to 50% of the initial intensity when used on complete DC at 25°C.) | | | | | |
| Internal Circuit | 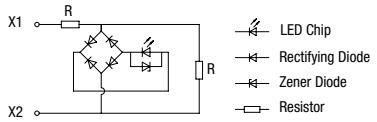 | | | 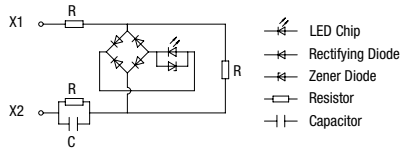 | | |

- Specify an illumination color code in place of ② in the Part No.
- Use the pure white (PW) LED module for yellow illumination.

## Contact Blocks

| | Single Contact Block | | Double Contact Block | | |
|---|---|---|---|---|---|
| Contact | 1NO | 1NC | 2NO | 2NC | 1NO-1NC |
| Part No. | YW-E10R | YW-E01 | YW-EW2R0 | YW-EW02 | YW-EW1R1 |
| Shape | | | | | |
| Housing Color | Blue/Black | Reddish Purple | Blue/Black | Reddish Purple | Reddish Purple/Blue |
| Push Rod Color | Black | Red | Black | Red | Gray |
| Terminal No. | 3-4 | 1-2 | 1st tier: 13-14<br>2nd tier: 23-24 | 1st tier: 11-12<br>2nd tier: 21-22 | 1st tier: (NO) 13-14<br>2nd tier: (NC) 21-22 |
| Weight (approx.) | 11g | | 19g | | |

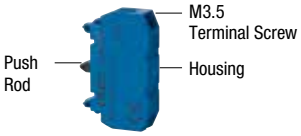


Single Contact Block
**YW-E10R**

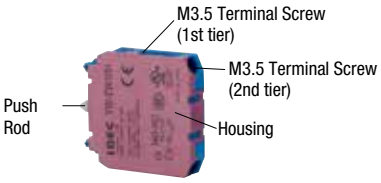


Double Contact Block
**YW-EW1R1**

## Mounting Hole Layout

### IEC 60947-5-1 compliant

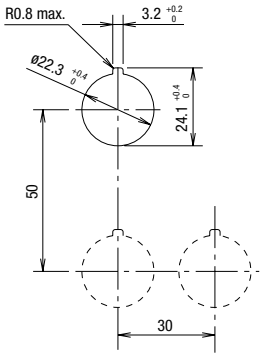


Note: Determine mounting centers to ensure easy operation.

## Part No. Development

Note: Please use these charts to interpret the part numbers as all combinations are not possible to be created.

### Illuminated Pushbuttons

C W 1 L - M 1 E 10 Q4 ②

**Bezel Color**

| Code | Bezel Color |
|---|---|
| 1 | Black |
| 4 | Metallic |

**Operation**

| Code | Operation |
|---|---|
| M | Momentary |
| A | Maintained |

**Shape**

| Code | Shape |
|---|---|
| 1 | Round Flush |
| 2 | Round Extended |

**Option**

| Code | Option | Part No. Example |
|---|---|---|
| W | White lens type (when light is off) | CW1L-M1E10Q4W② |

- For white lens, clear lens is used instead of colored lens for amber, green, red, and blue illuminated pushbuttons. Amber, green, red, or blue LED units are used.

**Illumination Color**

| Code | Color | Code | Color |
|---|---|---|---|
| A | Amber | R | Red |
| G | Green | S | Blue |
| PW | Pure White | Y | Yellow |

**Rated Voltage**

| Code | Rated Voltage | Code | Rated Voltage |
|---|---|---|---|
| Q2 | 6V AC/DC | QH | 100/120V AC |
| Q3 | 12V AC/DC | QM | 200/220V AC |
| Q4 | 24V AC/DC | QM4 | 230/240V AC |

**Contact Configuration**

| Code | Contact Configuration | Code | Contact Configuration |
|---|---|---|---|
| 10 | 1NO | 20 | 2NO |
| 01 | 1NC | 02 | 2NC |
| 11 | 1NO-1NC | 22 | 2NO-2NC |

### Pilot Lights

C W 1 P - 1 E Q4 ②

**Bezel Color**

| Code | Bezel Color |
|---|---|
| 1 | Black |
| 4 | Metallic |

**Shape**

| Code | Shape |
|---|---|
| 1 | Round Flush |
| 2 | Round Extended |

**Option**

| Code | Option | Part No. Example |
|---|---|---|
| W | White lens type (when light is off) | CW1P-1EQ4W② |

- For white lens, clear lens is used instead of colored lens for amber, green, red, and blue illuminated pushbuttons. Amber, green, red, or blue LED units are used.

**Illumination Color**

| Code | Color | Code | Color |
|---|---|---|---|
| A | Amber | R | Red |
| G | Green | S | Blue |
| PW | Pure White | Y | Yellow |

**Rated Voltage**

| Code | Rated Voltage | Code | Rated Voltage |
|---|---|---|---|
| Q2 | 6V AC/DC | QH | 100/120V AC |
| Q3 | 12V AC/DC | QM | 200/220V AC |
| Q4 | 24V AC/DC | QM4 | 230/240V AC |

### Pushbuttons

C W 1 B - M 1 E 10 ①

**Bezel Color**

| Code | Bezel Color |
|---|---|
| 1 | Black |
| 4 | Metallic |

**Operation**

| Code | Operation |
|---|---|
| M | Momentary |
| A | Maintained |

**Operation**

| Code | Shape |
|---|---|
| 1 | Round Flush |
| 2 | Round Extended |

**Button Color**

| Code | Color | Code | Color |
|---|---|---|---|
| A | Amber | R | Red |
| B | Black | S | Blue |
| G | Green | Y | Yellow |

**Contact Configuration**

| Code | Contact Configuration | Code | Contact Configuration |
|---|---|---|---|
| 10 | 1NO | 02 | 2NC |
| 01 | 1NC | 21 | 2NO-1NC |
| 11 | 1NO-1NC | 22 | 2NO-2NC |
| 12 | 1NO-2NC | 30 | 3NO |
| 20 | 2NO | 03 | 3NC |

## Selector Switches

**CW 1 S-2 L E 10**

### Bezel Color

| Code | Bezel Color |
|---|---|
| 1 | Black |
| 4 | Metallic |

### Contact Configuration

See page 12 and 13.

### Operator

| Code | Shape |
|---|---|
| Blank | Knob |
| L | Lever |

### Positions

2-position

| Code | Position | Code | Positions |
|---|---|---|---|
| 2 | Maintained | 21 | Spring return from right |

3-position

| Code | Position | Code | Positions | Code | Position | Code | Positions |
|---|---|---|---|---|---|---|---|
| 3 | Maintained | 31 | Spring return from right | 32 | Spring return from left | 33 | Spring return two-way |

## Key Selector Switches

**CW 1 K-2 A E 10 - 1H**

### Bezel Color

| Code | Bezel Color |
|---|---|
| 1 | Black |
| 4 | Metallic |

### Key

| Code | Bezel Color |
|---|---|
| Blank | Standard |
| 1H to 2H | Reversible Key |
| 3H to 6H | Non-reversible Key |

### Positions

| Code | Bezel Color |
|---|---|
| 2 | 90º 2-position, maintained |
| 21 | 90º 2-position, spring return from right |
| 3 | 45º 3-position, maintained |
| 31 | 45º 3-position, spring return from right |
| 32 | 45º 3-position, spring return from left |
| 33 | 45º 3-position, spring return two-way |

### Contact Configuration

See page 14 and 15.

### Key Removal Position

2-position

| Code | Position | Code | Positions | Code | Positions |
|---|---|---|---|---|---|
| A | Maintained | B | Removable in left only | C | Removable in right only |

❶⓪❷: Key retained position

| Spring Return from right |
|---|
| |

Note: The key cannot be removed in a spring return position.

3-position

| Code | Position | Code | Positions | Code | Positions | Code | Positions |
|---|---|---|---|---|---|---|---|
| A | Maintained | B | Removable in left and center | C | Removable in right and center | D | Removable in center only |
| E | Maintained (removable in right and left) | G | Removable in left only | H | Removable in right only | | |

❶⓪❷: Key retained position

| Spring Return from right | Spring Return from left | Spring Return two-way |
|---|---|---|
| | | |

Note: The key cannot be removed in a spring return position.

## Illuminated Pushbuttons

Package quantity: 1

| Shape | Operation | Operating Voltage | Contact Configuration | Part No. Black Bezel | Part No. Metallic Bezel | Illumination Color Code ② |
|---|---|---|---|---|---|---|
| Round Flush<br>CW□L-M1<br>CW□L-A1 | Momentary | 6V AC/DC | 1NO | CW1L-M1E10Q2② | CW4L-M1E10Q2② | Specify an illumination color code in place of ② in the Part No.<br>A: amber<br>G: green<br>PW: pure white<br>R: red<br>S: blue<br>Y: yellow |
| | | | 1NC | CW1L-M1E01Q2② | CW4L-M1E01Q2② | |
| | | | 1NO-1NC | CW1L-M1E11Q2② | CW4L-M1E11Q2② | |
| | | | 2NO | CW1L-M1E20Q2② | CW4L-M1E20Q2② | |
| | | | 2NC | CW1L-M1E02Q2② | CW4L-M1E02Q2② | |
| | | | 2NO-2NC | CW1L-M1E22Q2② | CW4L-M1E22Q2② | |
| | | 12V AC/DC | 1NO | CW1L-M1E10Q3② | CW4L-M1E10Q3② | |
| | | | 1NC | CW1L-M1E01Q3② | CW4L-M1E01Q3② | |
| | | | 1NO-1NC | CW1L-M1E11Q3② | CW4L-M1E11Q3② | |
| | | | 2NO | CW1L-M1E20Q3② | CW4L-M1E20Q3② | |
| | | | 2NC | CW1L-M1E02Q3② | CW4L-M1E02Q3② | |
| | | | 2NO-2NC | CW1L-M1E22Q3② | CW4L-M1E22Q3② | |
| | | 24V AC/DC | 1NO | CW1L-M1E10Q4② | CW4L-M1E10Q4② | |
| | | | 1NC | CW1L-M1E01Q4② | CW4L-M1E01Q4② | |
| | | | 1NO-1NC | CW1L-M1E11Q4② | CW4L-M1E11Q4② | |
| | | | 2NO | CW1L-M1E20Q4② | CW4L-M1E20Q4② | |
| | | | 2NC | CW1L-M1E02Q4② | CW4L-M1E02Q4② | |
| | | | 2NO-2NC | CW1L-M1E22Q4② | CW4L-M1E22Q4② | |
| | | 100/120V AC | 1NO | CW1L-M1E10QH② | CW4L-M1E10QH② | |
| | | | 1NC | CW1L-M1E01QH② | CW4L-M1E01QH② | |
| | | | 1NO-1NC | CW1L-M1E11QH② | CW4L-M1E11QH② | |
| | | | 2NO | CW1L-M1E20QH② | CW4L-M1E20QH② | |
| | | | 2NC | CW1L-M1E02QH② | CW4L-M1E02QH② | |
| | | | 2NO-2NC | CW1L-M1E22QH② | CW4L-M1E22QH② | |
| | | 200/220V AC | 1NO | CW1L-M1E10QM② | CW4L-M1E10QM② | |
| | | | 1NC | CW1L-M1E01QM② | CW4L-M1E01QM② | |
| | | | 1NO-1NC | CW1L-M1E11QM② | CW4L-M1E11QM② | |
| | | | 2NO | CW1L-M1E20QM② | CW4L-M1E20QM② | |
| | | | 2NC | CW1L-M1E02QM② | CW4L-M1E02QM② | |
| | | | 2NO-2NC | CW1L-M1E22QM② | CW4L-M1E22QM② | |
| | | 230/240V AC | 1NO | CW1L-M1E10QM4② | CW4L-M1E10QM4② | |
| | | | 1NC | CW1L-M1E01QM4② | CW4L-M1E01QM4② | |
| | | | 1NO-1NC | CW1L-M1E11QM4② | CW4L-M1E11QM4② | |
| | | | 2NO | CW1L-M1E20QM4② | CW4L-M1E20QM4② | |
| | | | 2NC | CW1L-M1E02QM4② | CW4L-M1E02QM4② | |
| | | | 2NO-2NC | CW1L-M1E22QM4② | CW4L-M1E22QM4② | |
| | Maintained | 6V AC/DC | 1NO | CW1L-A1E10Q2② | CW4L-A1E10Q2② | Specify an illumination color code in place of ② in the Part No.<br>A: amber<br>G: green<br>PW: pure white<br>R: red<br>S: blue<br>Y: yellow |
| | | | 1NC | CW1L-A1E01Q2② | CW4L-A1E01Q2② | |
| | | | 1NO-1NC | CW1L-A1E11Q2② | CW4L-A1E11Q2② | |
| | | | 2NO | CW1L-A1E20Q2② | CW4L-A1E20Q2② | |
| | | | 2NC | CW1L-A1E02Q2② | CW4L-A1E02Q2② | |
| | | | 2NO-2NC | CW1L-A1E22Q2② | CW4L-A1E22Q2② | |
| | | 12V AC/DC | 1NO | CW1L-A1E10Q3② | CW4L-A1E10Q3② | |
| | | | 1NC | CW1L-A1E01Q3② | CW4L-A1E01Q3② | |
| | | | 1NO-1NC | CW1L-A1E11Q3② | CW4L-A1E11Q3② | |
| | | | 2NO | CW1L-A1E20Q3② | CW4L-A1E20Q3② | |
| | | | 2NC | CW1L-A1E02Q3② | CW4L-A1E02Q3② | |
| | | | 2NO-2NC | CW1L-A1E22Q3② | CW4L-A1E22Q3② | |
| | | 24V AC/DC | 1NO | CW1L-A1E10Q4② | CW4L-A1E10Q4② | |
| | | | 1NC | CW1L-A1E01Q4② | CW4L-A1E01Q4② | |
| | | | 1NO-1NC | CW1L-A1E11Q4② | CW4L-A1E11Q4② | |
| | | | 2NO | CW1L-A1E20Q4② | CW4L-A1E20Q4② | |
| | | | 2NC | CW1L-A1E02Q4② | CW4L-A1E02Q4② | |
| | | | 2NO-2NC | CW1L-A1E22Q4② | CW4L-A1E22Q4② | |
| | | 100/120V AC | 1NO | CW1L-A1E10QH② | CW4L-A1E10QH② | |
| | | | 1NC | CW1L-A1E01QH② | CW4L-A1E01QH② | |
| | | | 1NO-1NC | CW1L-A1E11QH② | CW4L-A1E11QH② | |
| | | | 2NO | CW1L-A1E20QH② | CW4L-A1E20QH② | |
| | | | 2NC | CW1L-A1E02QH② | CW4L-A1E02QH② | |
| | | | 2NO-2NC | CW1L-A1E22QH② | CW4L-A1E22QH② | |
| | | 200/220V AC | 1NO | CW1L-A1E10QM② | CW4L-A1E10QM② | |
| | | | 1NC | CW1L-A1E01QM② | CW4L-A1E01QM② | |
| | | | 1NO-1NC | CW1L-A1E11QM② | CW4L-A1E11QM② | |
| | | | 2NO | CW1L-A1E20QM② | CW4L-A1E20QM② | |
| | | | 2NC | CW1L-A1E02QM② | CW4L-A1E02QM② | |
| | | | 2NO-2NC | CW1L-A1E22QM② | CW4L-A1E22QM② | |
| | | 230/240V AC | 1NO | CW1L-A1E10QM4② | CW4L-A1E10QM4② | |
| | | | 1NC | CW1L-A1E01QM4② | CW4L-A1E01QM4② | |
| | | | 1NO-1NC | CW1L-A1E11QM4② | CW4L-A1E11QM4② | |
| | | | 2NO | CW1L-A1E20QM4② | CW4L-A1E20QM4② | |
| | | | 2NC | CW1L-A1E02QM4② | CW4L-A1E02QM4② | |
| | | | 2NO-2NC | CW1L-A1E22QM4② | CW4L-A1E22QM4② | |

(black bezel)

(metallic bezel)

- See page 21 for replacement LED modules.
- Marking film can be inserted to indicate legends. See page 23.
- See page 16 for dimensions.
- White lens type (when light is off) are available. Clear lens is used instead of colored lens for amber, green, red, and blue illuminated pushbuttons. Amber, green, red, or blue LED units are used. To specify, add W before the color code in Part No.
  Example:
  **CW1L-M1E10Q2WR**
- A dummy block is installed when one contact block is used.

## Illuminated Pushbuttons

Package quantity: 1

| Shape | Operation | Operating Voltage | Contact Configuration | Part No. Black Bezel | Part No. Metallic Bezel | Illumination Color Code ② |
|---|---|---|---|---|---|---|
| Round Extended<br>CW□L-M2<br>CW□L-A2 | Momentary | 6V AC/DC | 1NO | CW1L-M2E10Q2② | CW4L-M2E10Q2② | Specify an illumination color code in place of ② in the Part No.<br><br>A: amber<br>G: green<br>PW: pure white<br>R: red<br>S: blue<br>Y: yellow |
| | | | 1NC | CW1L-M2E01Q2② | CW4L-M2E01Q2② | |
| | | | 1NO-1NC | CW1L-M2E11Q2② | CW4L-M2E11Q2② | |
| | | | 2NO | CW1L-M2E20Q2② | CW4L-M2E20Q2② | |
| | | | 2NC | CW1L-M2E02Q2② | CW4L-M2E02Q2② | |
| | | | 2NO-2NC | CW1L-M2E22Q2② | CW4L-M2E22Q2② | |
| | | 12V AC/DC | 1NO | CW1L-M2E10Q3② | CW4L-M2E10Q3② | |
| | | | 1NC | CW1L-M2E01Q3② | CW4L-M2E01Q3② | |
| | | | 1NO-1NC | CW1L-M2E11Q3② | CW4L-M2E11Q3② | |
| | | | 2NO | CW1L-M2E20Q3② | CW4L-M2E20Q3② | |
| | | | 2NC | CW1L-M2E02Q3② | CW4L-M2E02Q3② | |
| | | | 2NO-2NC | CW1L-M2E22Q3② | CW4L-M2E22Q3② | |
| | | 24V AC/DC | 1NO | CW1L-M2E10Q4② | CW4L-M2E10Q4② | |
| | | | 1NC | CW1L-M2E01Q4② | CW4L-M2E01Q4② | |
| | | | 1NO-1NC | CW1L-M2E11Q4② | CW4L-M2E11Q4② | |
| | | | 2NO | CW1L-M2E20Q4② | CW4L-M2E20Q4② | |
| | | | 2NC | CW1L-M2E02Q4② | CW4L-M2E02Q4② | |
| | | | 2NO-2NC | CW1L-M2E22Q4② | CW4L-M2E22Q4② | |
| | | 100/120V AC | 1NO | CW1L-M2E10QH② | CW4L-M2E10QH② | |
| | | | 1NC | CW1L-M2E01QH② | CW4L-M2E01QH② | |
| | | | 1NO-1NC | CW1L-M2E11QH② | CW4L-M2E11QH② | |
| | | | 2NO | CW1L-M2E20QH② | CW4L-M2E20QH② | |
| | | | 2NC | CW1L-M2E02QH② | CW4L-M2E02QH② | |
| | | | 2NO-2NC | CW1L-M2E22QH② | CW4L-M2E22QH② | |
| | | 200/220V AC | 1NO | CW1L-M2E10QM② | CW4L-M2E10QM② | |
| | | | 1NC | CW1L-M2E01QM② | CW4L-M2E01QM② | |
| | | | 1NO-1NC | CW1L-M2E11QM② | CW4L-M2E11QM② | |
| | | | 2NO | CW1L-M2E20QM② | CW4L-M2E20QM② | |
| | | | 2NC | CW1L-M2E02QM② | CW4L-M2E02QM② | |
| | | | 2NO-2NC | CW1L-M2E22QM② | CW4L-M2E22QM② | |
| | | 230/240V AC | 1NO | CW1L-M2E10QM4② | CW4L-M2E10QM4② | |
| | | | 1NC | CW1L-M2E01QM4② | CW4L-M2E01QM4② | |
| | | | 1NO-1NC | CW1L-M2E11QM4② | CW4L-M2E11QM4② | |
| | | | 2NO | CW1L-M2E20QM4② | CW4L-M2E20QM4② | |
| | | | 2NC | CW1L-M2E02QM4② | CW4L-M2E02QM4② | |
| | | | 2NO-2NC | CW1L-M2E22QM4② | CW4L-M2E22QM4② | |
| | Maintained | 6V AC/DC | 1NO | CW1L-A2E10Q2② | CW4L-A2E10Q2② | Specify an illumination color code in place of ② in the Part No.<br><br>A: amber<br>G: green<br>PW: pure white<br>R: red<br>S: blue<br>Y: yellow |
| | | | 1NC | CW1L-A2E01Q2② | CW4L-A2E01Q2② | |
| | | | 1NO-1NC | CW1L-A2E11Q2② | CW4L-A2E11Q2② | |
| | | | 2NO | CW1L-A2E20Q2② | CW4L-A2E20Q2② | |
| | | | 2NC | CW1L-A2E02Q2② | CW4L-A2E02Q2② | |
| | | | 2NO-2NC | CW1L-A2E22Q2② | CW4L-A2E22Q2② | |
| | | 12V AC/DC | 1NO | CW1L-A2E10Q3② | CW4L-A2E10Q3② | |
| | | | 1NC | CW1L-A2E01Q3② | CW4L-A2E01Q3② | |
| | | | 1NO-1NC | CW1L-A2E11Q3② | CW4L-A2E11Q3② | |
| | | | 2NO | CW1L-A2E20Q3② | CW4L-A2E20Q3② | |
| | | | 2NC | CW1L-A2E02Q3② | CW4L-A2E02Q3② | |
| | | | 2NO-2NC | CW1L-A2E22Q3② | CW4L-A2E22Q3② | |
| | | 24V AC/DC | 1NO | CW1L-A2E10Q4② | CW4L-A2E10Q4② | |
| | | | 1NC | CW1L-A2E01Q4② | CW4L-A2E01Q4② | |
| | | | 1NO-1NC | CW1L-A2E11Q4② | CW4L-A2E11Q4② | |
| | | | 2NO | CW1L-A2E20Q4② | CW4L-A2E20Q4② | |
| | | | 2NC | CW1L-A2E02Q4② | CW4L-A2E02Q4② | |
| | | | 2NO-2NC | CW1L-A2E22Q4② | CW4L-A2E22Q4② | |
| | | 100/120V AC | 1NO | CW1L-A2E10QH② | CW4L-A2E10QH② | |
| | | | 1NC | CW1L-A2E01QH② | CW4L-A2E01QH② | |
| | | | 1NO-1NC | CW1L-A2E11QH② | CW4L-A2E11QH② | |
| | | | 2NO | CW1L-A2E20QH② | CW4L-A2E20QH② | |
| | | | 2NC | CW1L-A2E02QH② | CW4L-A2E02QH② | |
| | | | 2NO-2NC | CW1L-A2E22QH② | CW4L-A2E22QH② | |
| | | 200/220V AC | 1NO | CW1L-A2E10QM② | CW4L-A2E10QM② | |
| | | | 1NC | CW1L-A2E01QM② | CW4L-A2E01QM② | |
| | | | 1NO-1NC | CW1L-A2E11QM② | CW4L-A2E11QM② | |
| | | | 2NO | CW1L-A2E20QM② | CW4L-A2E20QM② | |
| | | | 2NC | CW1L-A2E02QM② | CW4L-A2E02QM② | |
| | | | 2NO-2NC | CW1L-A2E22QM② | CW4L-A2E22QM② | |
| | | 230/240V AC | 1NO | CW1L-A2E10QM4② | CW4L-A2E10QM4② | |
| | | | 1NC | CW1L-A2E01QM4② | CW4L-A2E01QM4② | |
| | | | 1NO-1NC | CW1L-A2E11QM4② | CW4L-A2E11QM4② | |
| | | | 2NO | CW1L-A2E20QM4② | CW4L-A2E20QM4② | |
| | | | 2NC | CW1L-A2E02QM4② | CW4L-A2E02QM4② | |
| | | | 2NO-2NC | CW1L-A2E22QM4② | CW4L-A2E22QM4② | |

(black bezel)

(metallic bezel)

- See page 21 for replacement LED modules.
- Marking film can be inserted to indicate legends. See page 23.
- See page 16 for dimensions.
- White lens type (when light is off) are available. Clear lens is used instead of colored lens for amber, green, red, and blue illuminated pushbuttons. Amber, green, red, or blue LED units are used. To specify, add W before the color code in Part Number. Example: **CW1L-M2E10Q2WR**
- A dummy block is installed when one contact block is used.

## Pilot Lights

Package quantity: 1

| Shape | Operating Voltage | Part No. | | Illumination Color Code ② |
|---|---|---|---|---|
| | | Black Bezel | Metallic Bezel | |
| Round Flush<br>CW□P-1<br> <br>(black bezel)<br> <br>(metallic bezel) | 6V AC/DC | CW1P-1EQ2② | CW4P-1EQ2② | A: amber<br>G: green<br>PW: pure white<br>R: red<br>S: blue<br>Y: yellow |
| | 12V AC/DC | CW1P-1EQ3② | CW4P-1EQ3② | |
| | 24V AC/DC | CW1P-1EQ4② | CW4P-1EQ4② | |
| | 100/120V AC | CW1P-1EQH② | CW4P-1EQH② | |
| | 200/220V AC | CW1P-1EQM② | CW4P-1EQM② | |
| | 230/240V AC | CW1P-1EQM4② | CW4P-1EQM4② | |
| Round Extended<br>CW□P-2<br> <br>(black bezel)<br> <br>(metallic bezel) | 6V AC/DC | CW1P-2EQ2② | CW4P-2EQ2② | A: amber<br>G: green<br>PW: pure white<br>R: red<br>S: blue<br>Y: yellow |
| | 12V AC/DC | CW1P-2EQ3② | CW4P-2EQ3② | |
| | 24V AC/DC | CW1P-2EQ4② | CW4P-2EQ4② | |
| | 100/120V AC | CW1P-2EQH② | CW4P-2EQH② | |
| | 200/220V AC | CW1P-2EQM② | CW4P-2EQM② | |
| | 230/240V AC | CW1P-2EQM4② | CW4P-2EQM4② | |

- Specify an illumination color code in place of ② in the Part No.
- See page 16 for dimensions.
- See page 21 for replacement LED modules.
- Two dummy blocks are installed.

## Pushbuttons

Package quantity: 1

| Shape | Operation | Contact Configuration | Part No. Black Bezel | Part No. Metallic Bezel | Button Color Code ① |
|---|---|---|---|---|---|
| Round Flush<br>CW□B-M1<br>CW□B-A1<br> <br>(black bezel)<br> <br>(metallic bezel) | Momentary | 1NO | CW1B-M1E10① | CW4B-M1E10① | B: black<br>G: green<br>R: red<br>S: blue<br>W: white<br>Y: yellow |
| | | 1NC | CW1B-M1E01① | CW4B-M1E01① | |
| | | 1NO-1NC | CW1B-M1E11① | CW4B-M1E11① | |
| | | 2NO | CW1B-M1E20① | CW4B-M1E20① | |
| | | 2NC | CW1B-M1E02① | CW4B-M1E02① | |
| | | 2NO-1NC | CW1B-M1E21① | CW4B-M1E21① | |
| | | 1NO-2NC | CW1B-M1E12① | CW4B-M1E12① | |
| | | 3NO | CW1B-M1E30① | CW4B-M1E30① | |
| | | 3NC | CW1B-M1E03① | CW4B-M1E03① | |
| | | 2NO-2NC | CW1B-M1E22① | CW4B-M1E22① | |
| | Maintained | 1NO | CW1B-A1E10① | CW4B-A1E10① | B: black<br>G: green<br>R: red<br>S: blue<br>W: white<br>Y: yellow |
| | | 1NC | CW1B-A1E01① | CW4B-A1E01① | |
| | | 1NO-1NC | CW1B-A1E11① | CW4B-A1E11① | |
| | | 2NO | CW1B-A1E20① | CW4B-A1E20① | |
| | | 2NC | CW1B-A1E02① | CW4B-A1E02① | |
| | | 2NO-1NC | CW1B-A1E21① | CW4B-A1E21① | |
| | | 1NO-2NC | CW1B-A1E12① | CW4B-A1E12① | |
| | | 3NO | CW1B-A1E30① | CW4B-A1E30① | |
| | | 3NC | CW1B-A1E03① | CW4B-A1E03① | |
| | | 2NO-2NC | CW1B-A1E22① | CW4B-A1E22① | |
| Round Extended<br>CW□B-M2<br>CW□B-A2<br> <br>(black bezel)<br> <br>(metallic bezel) | Momentary | 1NO | CW1B-M2E10① | CW4B-M2E10① | B: black<br>G: green<br>R: red<br>S: blue<br>W: white<br>Y: yellow |
| | | 1NC | CW1B-M2E01① | CW4B-M2E01① | |
| | | 1NO-1NC | CW1B-M2E11① | CW4B-M2E11① | |
| | | 2NO | CW1B-M2E20① | CW4B-M2E20① | |
| | | 2NC | CW1B-M2E02① | CW4B-M2E02① | |
| | | 2NO-1NC | CW1B-M2E21① | CW4B-M2E21① | |
| | | 1NO-2NC | CW1B-M2E12① | CW4B-M2E12① | |
| | | 3NO | CW1B-M2E30① | CW4B-M2E30① | |
| | | 3NC | CW1B-M2E03① | CW4B-M2E03① | |
| | | 2NO-2NC | CW1B-M2E22① | CW4B-M2E22① | |
| | Maintained | 1NO | CW1B-A2E10① | CW4B-A2E10① | B: black<br>G: green<br>R: red<br>S: blue<br>W: white<br>Y: yellow |
| | | 1NC | CW1B-A2E01① | CW4B-A2E01① | |
| | | 1NO-1NC | CW1B-A2E11① | CW4B-A2E11① | |
| | | 2NO | CW1B-A2E20① | CW4B-A2E20① | |
| | | 2NC | CW1B-A2E02① | CW4B-A2E02① | |
| | | 2NO-1NC | CW1B-A2E21① | CW4B-A2E21① | |
| | | 1NO-2NC | CW1B-A2E12① | CW4B-A2E12① | |
| | | 3NO | CW1B-A2E30① | CW4B-A2E30① | |
| | | 3NC | CW1B-A2E03① | CW4B-A2E03① | |
| | | 2NO-2NC | CW1B-A2E22① | CW4B-A2E22① | |

- Specify a button color code in place of ① in the Part No.
- See page 17 for dimensions.
- Two or one dummy block is installed when one or two contact blocks are used, respectively.
- Contact configurations 2NO-1NC, 1NO-2C, 3NO, and 3NC are available for momentary pushbuttons only.

## Selector Switches

Package quantity: 1

| Shape | CW□S (Knob Operator) (black bezel) (metallic bezel) |
|---|---|

| No. of Positions | Contact Configuration (Code) | Contact Block: Mounting Position | Contact Block: Contact | Operator Position: L | Operator Position: R | Maintained | Spring return from right |
|---|---|---|---|---|---|---|---|
| 90° 2-position | 1NO (10) | 1 | NO | | ● | CW□S-2E10 | CW□S-21E10 |
| | | 2 | — | Dummy | | | |
| | | 3 | — | Dummy | | | |
| | 1NC (01) | 1 | — | Dummy | | CW□S-2E01 | CW□S-21E01 |
| | | 2 | — | Dummy | | | |
| | | 3 | NC | ● | | | |
| | 1NO-1NC (11) | 1 | NO | | ● | CW□S-2E11 | CW□S-21E11 |
| | | 2 | — | Dummy | | | |
| | | 3 | NC | ● | | | |
| | 2NO (20) | 1 | NO | | ● | CW□S-2E20 | CW□S-21E20 |
| | | 2 | — | Dummy | | | |
| | | 3 | NO | | ● | | |
| | 2NC (02) | 1 | NC | ● | | CW□S-2E02 | CW□S-21E02 |
| | | 2 | — | Dummy | | | |
| | | 3 | NC | ● | | | |
| | 2NO-1NC (21) | 1 | NO | | ● | CW□S-2E21 | CW□S-21E21 |
| | | 2 | NO | | ● | | |
| | | 3 | NC | ● | | | |
| | 1NO-2NC (12) | 1 | NO | | ● | CW□S-2E12 | CW□S-21E12 |
| | | 2 | NC | ● | | | |
| | | 3 | NC | ● | | | |
| | 3NO (30) | 1 | NO | | ● | CW□S-2E30 | CW□S-21E30 |
| | | 2 | NO | | ● | | |
| | | 3 | NO | | ● | | |
| | 3NC (03) | 1 | NC | ● | | CW□S-2E03 | CW□S-21E03 |
| | | 2 | NC | ● | | | |
| | | 3 | NC | ● | | | |
| | 2NO-2NC (22) | 1 | NO/NC: NO | | ● | CW□S-2E22 | CW□S-21E22 |
| | | | NO/NC: NC | ● | | | |
| | | 2 | — | Dummy | | | |
| | | 3 | NO/NC: NO | | ● | | |
| | | | NO/NC: NC | ● | | | |
| | 4NO (40) | 1 | 2NO: NO | | ● | CW□S-21E40 | CW□S-21E40 |
| | | | 2NO: NO | | ● | | |
| | | 2 | — | Dummy | | | |
| | | 3 | 2NO: NO | | ● | | |
| | | | 2NO: NO | | ● | | |

- Specify a bezel color code in place of □ in the Part No.: 1 (black bezel), 4 (metallic bezel)
- Lever operator is also available. For dimensions, see page 18.
- When ordering a lever operator selector switch, designate **L** before **E** in the Part No. of knob operator selector switches.

[Example] **CW1S-2E10** → **CW1S-2LE10**

Knob Operator  Lever Operator

Lever Operator

**CW1S-∗LE** (black bezel)

**CW4S-∗LE** (metallic bezel)

**Contact Block Mounting Position**

1 2 3

Package quantity: 1

| No. of Positions | Contact Configuration (Code) | Contact Block: Mounting Position | Contact Block: Contact | Operator Position: L | Operator Position: C | Operator Position: R | Maintained | Spring return from right | Spring return from left | Spring return two-way |
|---|---|---|---|---|---|---|---|---|---|---|
| 45° 3-position | 1NO-1NC (11) | 1 | NO | ● | | | CW□S-3E11 | CW□S-31E11 | CW□S-32E11 | CW□S-33E11 |
| | | 2 | — | Dummy | | | | | | |
| | | 3 | NC | ▬ | | | | | | |
| | 1NO-1NC (11N1) | 1 | NC | | ▬ | | CW□S-3E11N1 | CW□S-31E11N1 | CW□S-32E11N1 | CW□S-33E11N1 |
| | | 2 | — | Dummy | | | | | | |
| | | 3 | NO | | | ● | | | | |
| | 1NO-1NC (11N2) | 1 | NO | ● | | | CW□S-3E11N2 | CW□S-31E11N2 | CW□S-32E11N2 | CW□S-33E11N2 |
| | | 2 | NC | | ● | | | | | |
| | | 3 | — | Dummy | | | | | | |
| | 1NO-1NC (11N3) | 1 | — | Dummy | | | CW□S-3E11N3 | CW□S-31E11N3 | CW□S-32E11N3 | CW□S-33E11N3 |
| | | 2 | NC | | ● | | | | | |
| | | 3 | NO | | | ● | | | | |
| | 1NO-1NC (11N4) | 1 | — | Dummy | | | CW□S-3E11N4 | CW□S-31E11N4 | CW□S-32E11N4 | CW□S-33E11N4 |
| | | 2 | NO | ● | | ● | | | | |
| | | 3 | NC | ▬ | | | | | | |
| | 2NO (20) | 1 | NO | ● | | | CW□S-3E20 | CW□S-31E20 | CW□S-32E20 | CW□S-33E20 |
| | | 2 | — | Dummy | | | | | | |
| | | 3 | NO | | | ● | | | | |
| | 2NO (20N1) | 1 | — | Dummy | | | CW□S-3E20N1 | CW□S-31E20N1 | CW□S-32E20N1 | CW□S-33E20N1 |
| | | 2 | NO | ● | | ● | | | | |
| | | 3 | NO | | | ● | | | | |
| | 2NC (02) | 1 | NC | | ▬ | | CW□S-3E02 | CW□S-31E02 | CW□S-32E02 | CW□S-33E02 |
| | | 2 | — | Dummy | | | | | | |
| | | 3 | NC | ▬ | | | | | | |
| | 2NC (02N1) | 1 | — | Dummy | | | CW□S-3E02N1 | CW□S-31E02N1 | CW□S-32E02N1 | CW□S-33E02N1 |
| | | 2 | NC | | ● | | | | | |
| | | 3 | NC | ▬ | | | | | | |
| | 2NO-1NC (21) | 1 | NO | ● | | | CW□S-3E21 | CW□S-31E21 | CW□S-32E21 | CW□S-33E21 |
| | | 2 | NO | ● | | ● | | | | |
| | | 3 | NC | ▬ | | | | | | |
| | 2NO-1NC (21N1) | 1 | NO | ● | | | CW□S-3E21N1 | CW□S-31E21N1 | CW□S-32E21N1 | CW□S-33E21N1 |
| | | 2 | NC | | ● | | | | | |
| | | 3 | NO | | | ● | | | | |
| | 1NO-2NC (12) | 1 | NO | ● | | | CW□S-3E12 | CW□S-31E12 | CW□S-32E12 | CW□S-33E12 |
| | | 2 | NC | | ● | | | | | |
| | | 3 | NC | ▬ | | | | | | |
| | 1NO-2NC (12N1) | 1 | NC | | ▬ | | CW□S-3E12N1 | CW□S-31E12N1 | CW□S-32E12N1 | CW□S-33E12N1 |
| | | 2 | NO | ● | | ● | | | | |
| | | 3 | NC | ▬ | | | | | | |
| | 3NO (30) | 1 | NO | ● | | | CW□S-3E30 | CW□S-31E30 | CW□S-32E30 | CW□S-33E30 |
| | | 2 | NO | ● | | ● | | | | |
| | | 3 | NO | | | ● | | | | |
| | 3NC (03) | 1 | NC | | ▬ | | CW□S-3E03 | CW□S-31E03 | CW□S-32E03 | CW□S-33E03 |
| | | 2 | NC | | ● | | | | | |
| | | 3 | NC | ▬ | | | | | | |
| | 2NO-2NC (22) | 1 | NO/NC: NO | ● | | | CW□S-3E22 | CW□S-31E22 | CW□S-32E22 | CW□S-33E22 |
| | | | NO/NC: NC | | ▬ | | | | | |
| | | 2 | — | Dummy | | | | | | |
| | | 3 | NO/NC: NO | | | ● | | | | |
| | | | NO/NC: NC | ▬ | | | | | | |
| | 4NO (40) | 1 | 2NO: NO | ● | | | CW□S-3E40 | CW□S-31E40 | CW□S-32E40 | CW□S-33E40 |
| | | | 2NO: NO | ● | | | | | | |
| | | 2 | — | Dummy | | | | | | |
| | | 3 | 2NO: NO | | | ● | | | | |
| | | | 2NO: NO | | | ● | | | | |
| | 2NO-2NC (22N2) | 1 | 2NC: NC | | ▬ | | CW□S-3E22N2 | CW□S-31E22N2 | CW□S-32E22N2 | CW□S-33E22N2 |
| | | | 2NC: NC | | ▬ | | | | | |
| | | 2 | — | Dummy | | | | | | |
| | | 3 | 2NO: NC | | | ● | | | | |
| | | | 2NO: NC | | | ● | | | | |

- Specify a bezel color code in place of □ in the Part No.: 1 (black bezel), 4 (metallic bezel) • For the contact block mounting position, see page 12.
- Lever operator is also available. For dimensions, see page 18.
- When ordering a lever operator selector switch, designate **L** before **E** in the Part No. of knob operator selector switches.

[Example] **CW1S-3E11** → **CW1S-3LE11**
Knob Operator Lever Operator

## Key Selector Switches

Package quantity: 1

| Shape | CW□K (black bezel) (metallic bezel) |
|---|---|

| No. of Positions | Contact Configuration (Code) | Contact Block: Mounting Position | Contact Block: Contact | | Operator Position: L | Operator Position: R | L R Maintained | L R Spring return from right |
|---|---|---|---|---|---|---|---|---|
| 90° 2-position | 1NO (10) | 1 | NO | | | ● | CW□K-2AE10 | CW□K-21BE10 |
| | | 2 | — | | Dummy | | | |
| | | 3 | — | | Dummy | | | |
| | 1NC (01) | 1 | — | | Dummy | | CW□K-2AE01 | CW□K-21BE01 |
| | | 2 | — | | Dummy | | | |
| | | 3 | NC | | ● | | | |
| | 1NO-1NC (11) | 1 | NO | | | ● | CW□K-2AE11 | CW□K-21BE11 |
| | | 2 | — | | Dummy | | | |
| | | 3 | NC | | ● | | | |
| | 2NO (20) | 1 | NO | | | ● | CW□K-2AE20 | CW□K-21BE20 |
| | | 2 | — | | Dummy | | | |
| | | 3 | NO | | | ● | | |
| | 2NC (02) | 1 | NC | | ● | | CW□K-2AE02 | CW□K-21BE02 |
| | | 2 | — | | Dummy | | | |
| | | 3 | NC | | ● | | | |
| | 2NO-1NC (21) | 1 | NO | | | ● | CW□K-2AE21 | CW□K-21BE21 |
| | | 2 | NO | | | ● | | |
| | | 3 | NC | | ● | | | |
| | 1NO-2NC (12) | 1 | NO | | | ● | CW□K-2AE12 | CW□K-21BE12 |
| | | 2 | NC | | ● | | | |
| | | 3 | NC | | ● | | | |
| | 3NO (30) | 1 | NO | | | ● | CW□K-2AE30 | CW□K-21BE30 |
| | | 2 | NO | | | ● | | |
| | | 3 | NO | | | ● | | |
| | 3NC (03) | 1 | NC | | ● | | CW□K-2AE03 | CW□K-21BE03 |
| | | 2 | NC | | ● | | | |
| | | 3 | NC | | ● | | | |
| | 2NO-2NC (22) | 1 | NO/NC | NO | | ● | CW□K-2AE22 | CW□K-21BE22 |
| | | | | NC | ● | | | |
| | | 2 | — | | Dummy | | | |
| | | 3 | NO/NC | NO | | ● | | |
| | | | | NC | ● | | | |
| | 4NO (40) | 1 | 2NO | NO | | ● | CW□K-2AE40 | CW□K-21BE40 |
| | | | | NO | | ● | | |
| | | 2 | — | | Dummy | | | |
| | | 3 | 2NO | NO | | ● | | |
| | | | | NO | | ● | | |

- Specify a bezel color code in place of □ in the Part No.: 1 (black bezel), 4 (metallic bezel)
- On the spring-returned types, the key can be released only from the maintained position. On the maintained types, the key can be released from every position. Key retained positions are also available. See below.
- Two keys are supplied. • Key cylinder material: Metal
- Besides the standard key (key number 0H), six other keys are also available. See below.
- For the contact block mounting position, see page 12. • For dimensions, see page 19.
- When ordering an optional key or optional key retained positions, specify designation codes as shown below:

[Example] **CW1K-2AE10-1H**

(blank): Standard key (0H, reversible)
1H to 2H: Reversible key
3H to 6H: Non-reversible key

Note:
Key number is indicated on the key cylinder.
Standard keys do not have a key number indication.

Key removal position code

2-position
A: Removable in all positions
B: Removable in left only
C: Removable in right only

3-position
A: Removable in all positions
B: Removable in left and center
C: Removable in right and center
D: Removable in center only
E: Removable in right and left
G: Removable in left only
H: Removable in right only

Note: Key is retained in the spring-returned position.

Package quantity: 1

| No. of Positions | Contact Configuration | Contact Block: Mounting Position | Contact Block: Contact | Operator Position: L | C | R | Maintained | Spring return from right | Spring return from left | Spring return two-way |
|---|---|---|---|---|---|---|---|---|---|---|
| 45° 3-position | 1NO-1NC (11) | 1 | NO | ● | | | CW□K-3AE11 | CW□K-31BE11 | CW□K-32CE11 | CW□K-33DE11 |
| | | 2 | — | Dummy | | | | | | |
| | | 3 | NC | ▬ | ▬ | | | | | |
| | 1NO-1NC (11N1) | 1 | NC | | ▬ | ▬ | CW□K-3AE11N1 | CW□K-31BE11N1 | CW□K-32CE11N1 | CW□K-33DE11N1 |
| | | 2 | — | Dummy | | | | | | |
| | | 3 | NO | | | ● | | | | |
| | 1NO-1NC (11N2) | 1 | NO | ● | | | CW□K-3AE11N2 | CW□K-31BE11N2 | CW□K-32CE11N2 | CW□K-33DE11N2 |
| | | 2 | NC | | ● | | | | | |
| | | 3 | — | Dummy | | | | | | |
| | 1NO-1NC (11N3) | 1 | — | Dummy | | | CW□K-3AE11N3 | CW□K-31BE11N3 | CW□K-32CE11N3 | CW□K-33DE11N3 |
| | | 2 | NC | | ● | | | | | |
| | | 3 | NO | | | ● | | | | |
| | 1NO-1NC (11N4) | 1 | — | Dummy | | | CW□K-3AE11N4 | CW□K-31BE11N4 | CW□K-32CE11N4 | CW□K-33DE11N4 |
| | | 2 | NO | ● | | ● | | | | |
| | | 3 | NC | ▬ | ▬ | | | | | |
| | 2NO (20) | 1 | NO | ● | | | CW□K-3AE20 | CW□K-31BE20 | CW□K-32CE20 | CW□K-33DE20 |
| | | 2 | — | Dummy | | | | | | |
| | | 3 | NO | | | ● | | | | |
| | 2NO (20N1) | 1 | — | Dummy | | | CW□K-3AE20N1 | CW□K-31BE20N1 | CW□K-32CE20N1 | CW□K-33DE20N1 |
| | | 2 | NO | ● | | ● | | | | |
| | | 3 | NO | | | ● | | | | |
| | 2NC (02) | 1 | NC | | ▬ | ▬ | CW□K-3AE02 | CW□K-31BE02 | CW□K-32CE02 | CW□K-33DE02 |
| | | 2 | — | Dummy | | | | | | |
| | | 3 | NC | ▬ | ▬ | | | | | |
| | 2NC (02N1) | 1 | — | Dummy | | | CW□K-3AE02N1 | CW□K-31BE02N1 | CW□K-32CE02N1 | CW□K-33DE02N1 |
| | | 2 | NC | | ● | | | | | |
| | | 3 | NC | ▬ | ▬ | | | | | |
| | 2NO-1NC (21) | 1 | NO | ● | | | CW□K-3AE21 | CW□K-31BE21 | CW□K-32CE21 | CW□K-33DE21 |
| | | 2 | NO | ● | | ● | | | | |
| | | 3 | NC | ▬ | ▬ | | | | | |
| | 2NO-1NC (21N1) | 1 | NO | ● | | | CW□K-3AE21N1 | CW□K-31BE21N1 | CW□K-32CE21N1 | CW□K-33DE21N1 |
| | | 2 | NC | | ● | | | | | |
| | | 3 | NO | | | ● | | | | |
| | 1NO-2NC (12) | 1 | NO | ● | | | CW□K-3AE12 | CW□K-31BE12 | CW□K-32CE12 | CW□K-33DE12 |
| | | 2 | NC | | ● | | | | | |
| | | 3 | NC | ▬ | ▬ | | | | | |
| | 1NO-2NC (12N1) | 1 | NC | | ▬ | ▬ | CW□K-3AE12N1 | CW□K-31BE12N1 | CW□K-32CE12N1 | CW□K-33DE12N1 |
| | | 2 | NO | ● | | ● | | | | |
| | | 3 | NC | ▬ | ▬ | | | | | |
| | 3NO (30) | 1 | NO | ● | | | CW□K-3AE30 | CW□K-31BE30 | CW□K-32CE30 | CW□K-33DE30 |
| | | 2 | NO | ● | | ● | | | | |
| | | 3 | NO | | | ● | | | | |
| | 3NC (03) | 1 | NC | | ▬ | ▬ | CW□K-3AE03 | CW□K-31BE03 | CW□K-32CE03 | CW□K-33DE03 |
| | | 2 | NC | | ● | | | | | |
| | | 3 | NC | ▬ | ▬ | | | | | |
| | 2NO-2NC (22) | 1 | NO/NC NO | ● | | | CW□K-3AE22 | CW□K-31BE22 | CW□K-32CE22 | CW□K-33DE22 |
| | | | NO/NC NC | | ▬ | ▬ | | | | |
| | | 2 | — | Dummy | | | | | | |
| | | 3 | NO/NC NO | | | ● | | | | |
| | | | NO/NC NC | ▬ | ▬ | | | | | |
| | 4NO (40) | 1 | 2NO NO | ● | | | CW□K-3AE40 | CW□K-31BE40 | CW□K-32CE40 | CW□K-33DE40 |
| | | | 2NO NO | ● | | | | | | |
| | | 2 | — | Dummy | | | | | | |
| | | 3 | 2NO NO | | | ● | | | | |
| | | | 2NO NO | | | ● | | | | |
| | 2NO-2NC (22N2) | 1 | 2NC NC | | ▬ | ▬ | CW□K-3AE22N2 | CW□K-31BE22N2 | CW□K-32CE22N2 | CW□K-33DE22N2 |
| | | | 2NC NC | | ▬ | ▬ | | | | |
| | | 2 | — | Dummy | | | | | | |
| | | 3 | 2NO NO | | | ● | | | | |
| | | | 2NO NO | | | ● | | | | |

- Specify a bezel color code in place of □ in the Part No.: 1 (black bezel), 4 (metallic bezel)
- On the spring-returned types, the key can be released only from the maintained position. On the maintained types, the key can be released from every position. Key retained positions are also available. See page 14.
- Two keys are supplied. • Key cylinder material: Metal
- Besides the standard key (key number 0H), six other keys are also available. See page 14.
- For the contact block mounting position, see right.
- For dimensions, see page 19.

Contact Block Mounting Position

## Dimensions

All dimensions in mm.

### Illuminated Pushbuttons

See page 5 for mounting hole layout.

#### 1 to 2 contacts

**Round Flush**

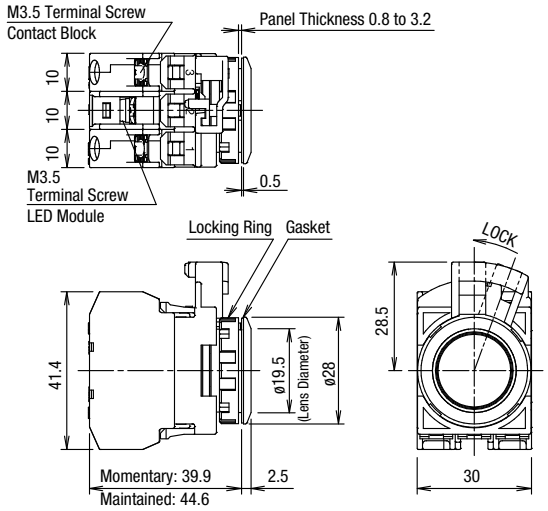


**Round Extended**

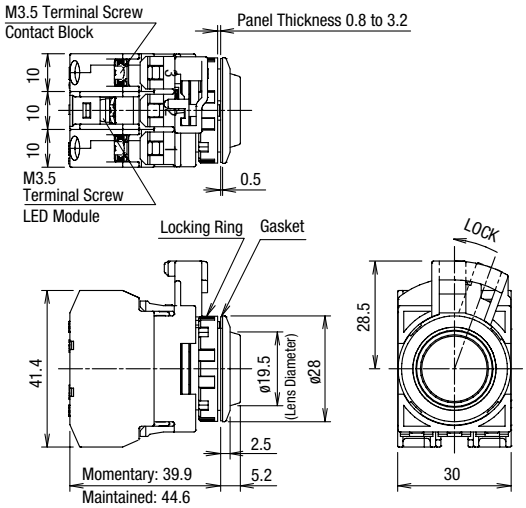


#### 4 contacts

**Round Flush**

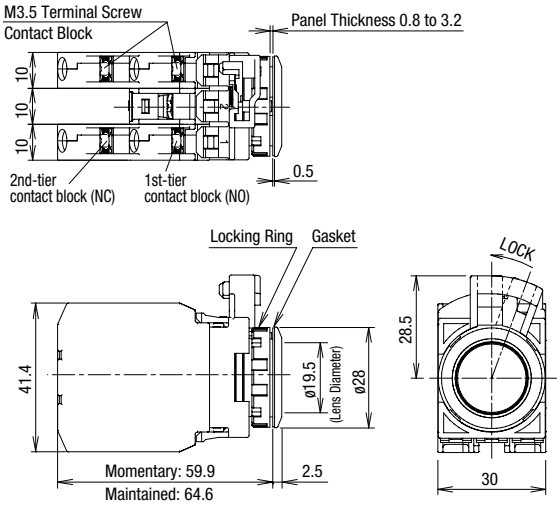


**Round Extended**

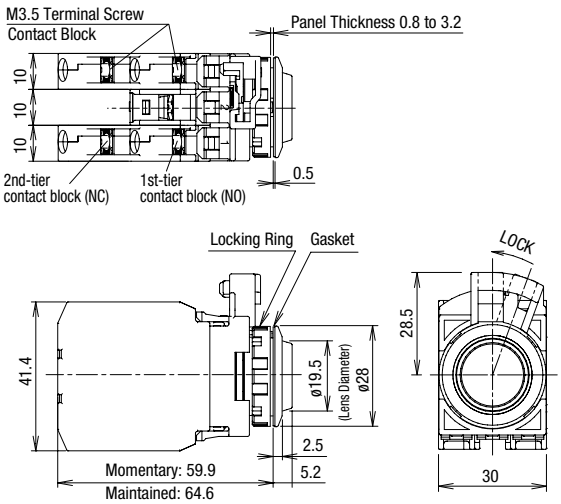


### Pilot Lights

**Round Flush**

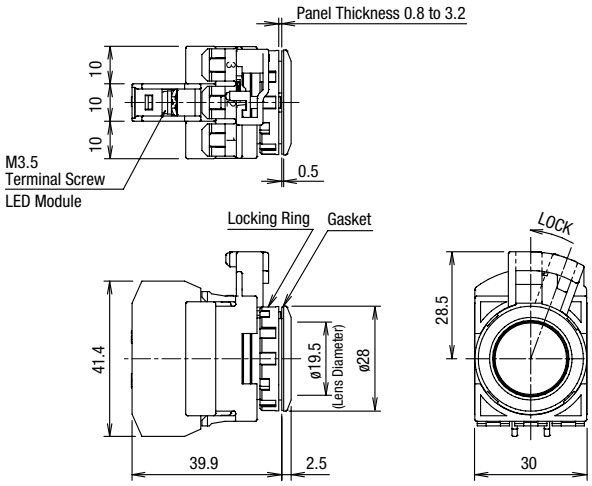


**Round Extended**

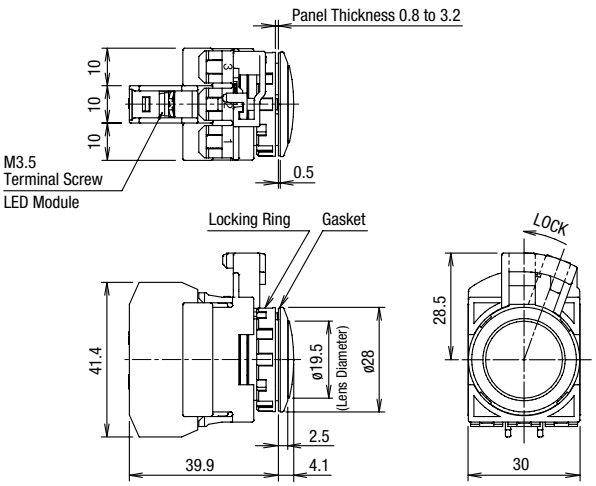

## Pushbuttons

All dimensions in mm.

See page 5 for mounting hole layout.

### 1 to 3 contacts

#### Round Flush

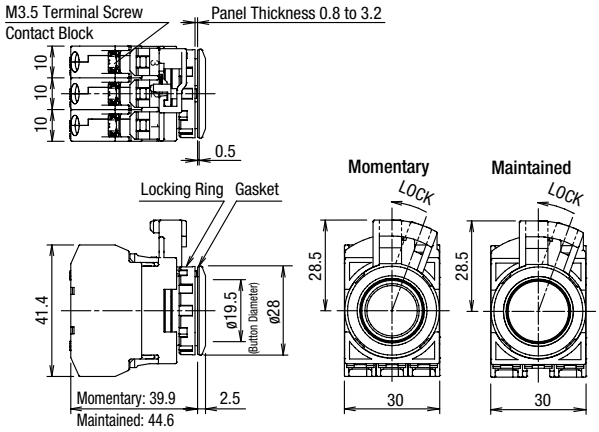


#### Round Extended

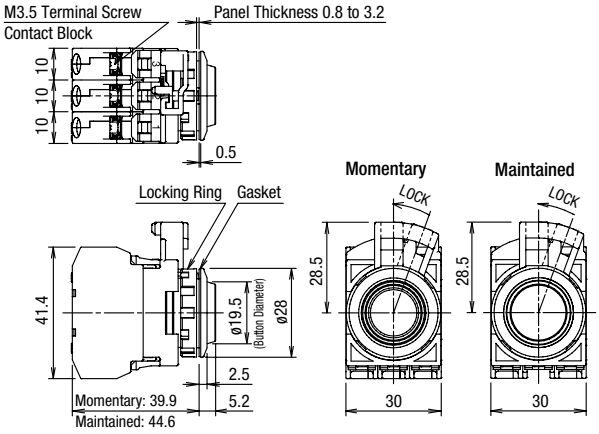


### 4 contacts

#### Round Flush

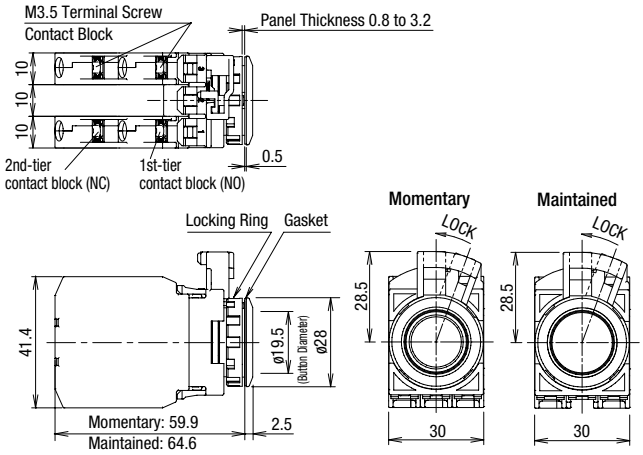


#### Round Extended

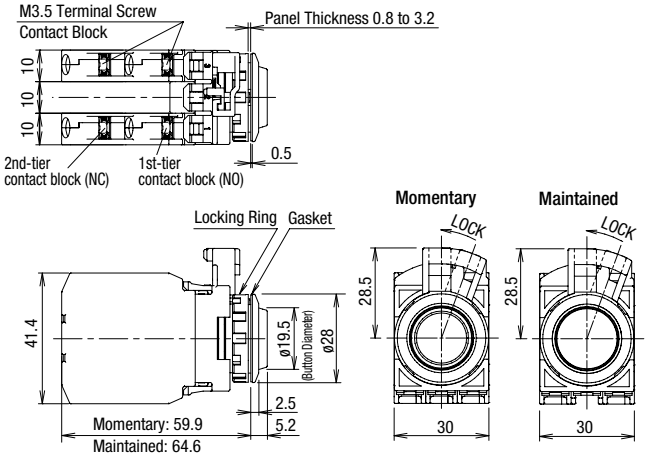

## Selector Switches

All dimensions in mm.

See page 5 for mounting hole layout.

### 1 to 3 contacts

#### Knob Operator

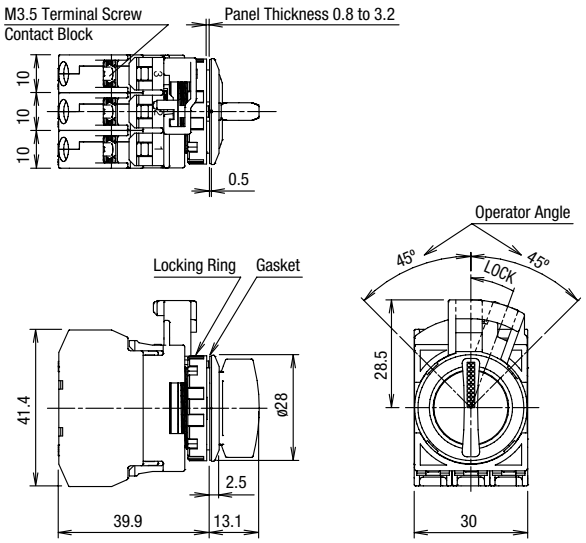


#### Lever Operator

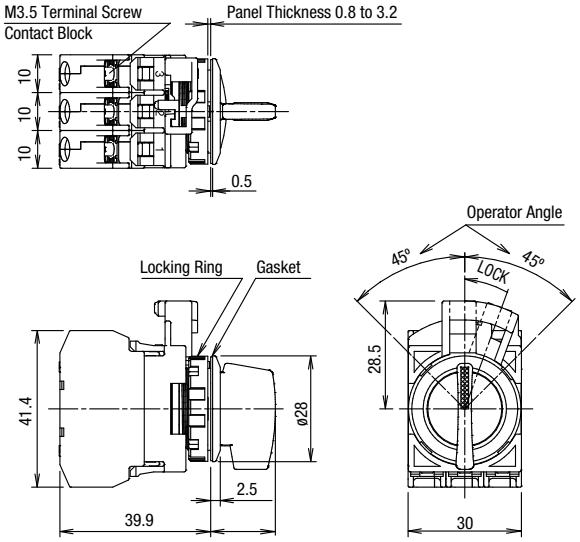


### 4 contacts

#### Knob Operator

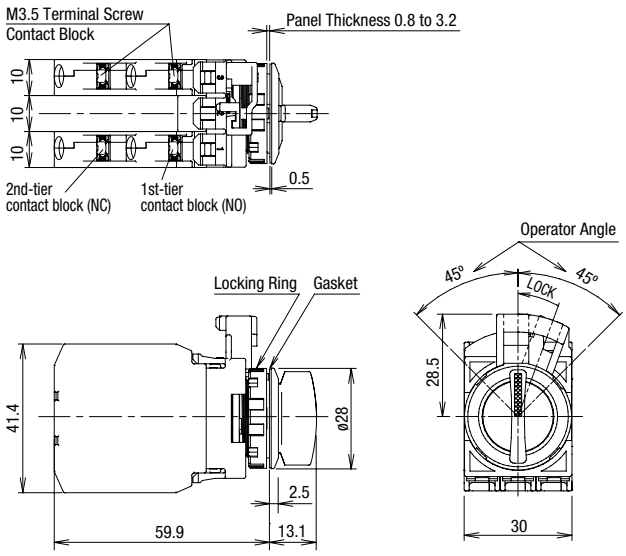


#### Lever Operator

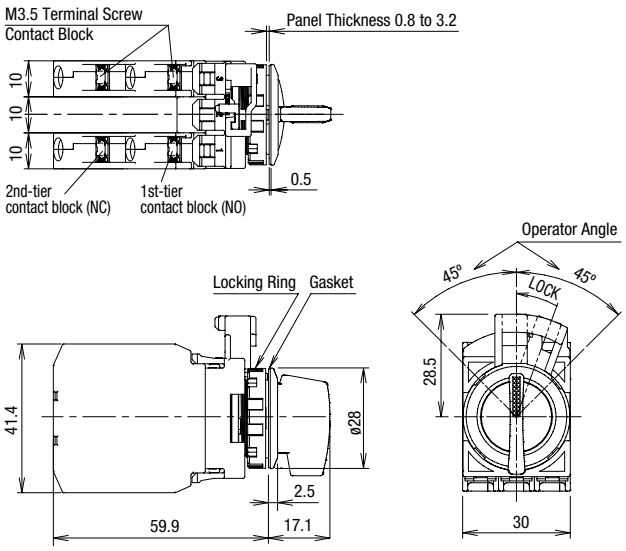

## Key Selector Switches

### 1 to 3 contacts

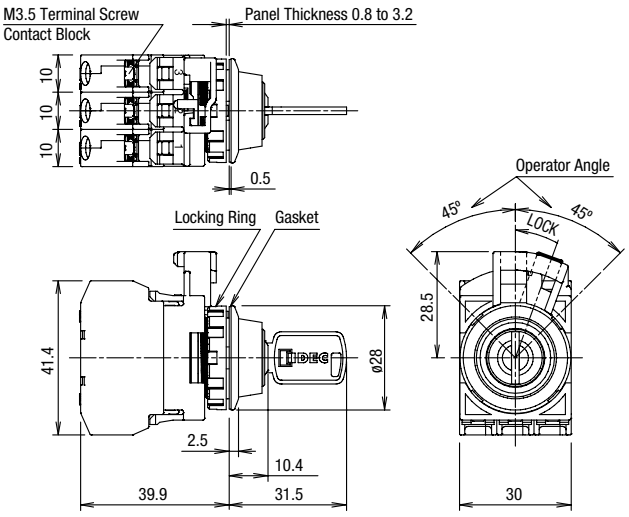


Key No: 0H to 2H (reversible key)

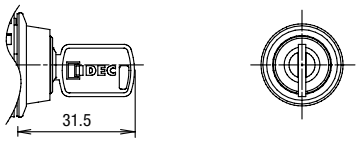


Key No: 3H to 6H (non-reversible key)

### 4 contacts

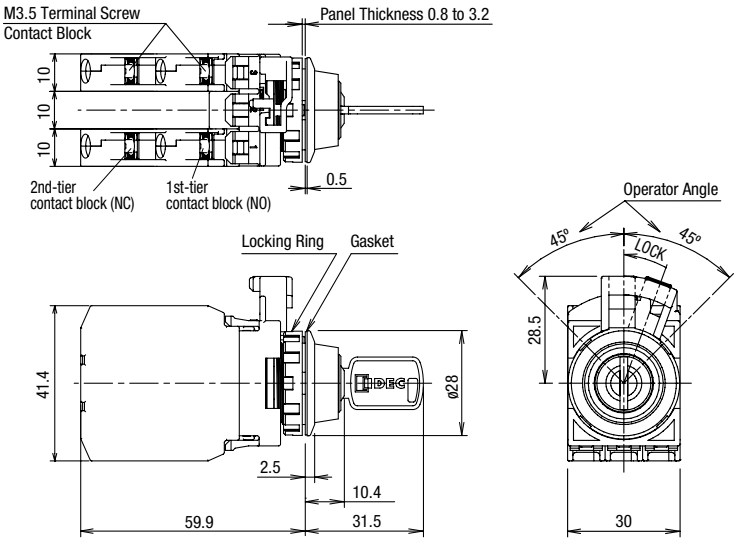


Key No: 0H to 2H (reversible key)

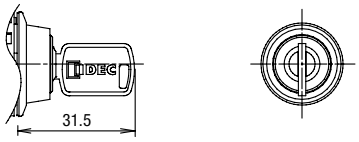


Key No: 3H to 6H (non-reversible key)

## Keys

All dimensions in mm.

### Reversible Key

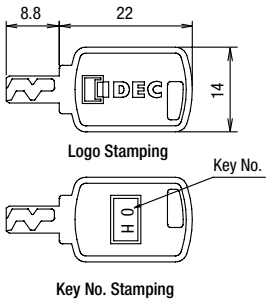


### Non-reversible Key

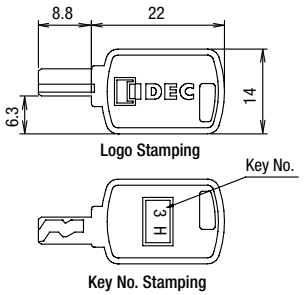


See page 5 for mounting hole layout.

## Accessories

| Shape | Material | Part No. | Package Quantity | Remarks |
|---|---|---|---|---|
| Locking Ring Wrench | Brass | MW9Z-T1 | 1 | • Used to tighten the locking ring when installing the CW series control unit in a panel cut-out.<br>• Weight: Approx 150 g 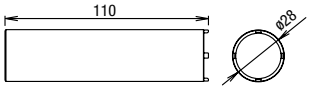  |
| Mounting Hole Plug | Polyamide (black) | LW9Z-BP1 | 1 | • Used to plug an unnecessary ø22.3 mm hole in the panel.<br>• Degree of protection: IP65<br>• Panel thickness: 0.8 to 6.0 mm 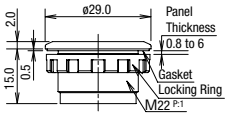  |
| Rubber Boot<br>1 | 1 For round flush | Rubber (Transparent silicon rubber) | CW9Z-D11 | 1 | • Degree of protection: IP66/67 UL Type 4X<br>• Panel thickness: 0.8 to 3.2 mm<br>• Use with round extended illuminated push-buttons/pushbuttons. 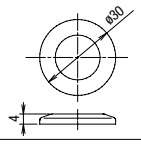  |
| 2 | 2 For round extended | | CW9Z-D12 | 1 | 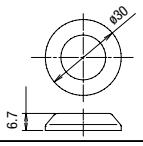  |

## Nameplates

| Description | Legend | Material | Part No. | Ordering No. | Package Quantity | Dimensions (mm) |
|---|---|---|---|---|---|---|
| CWAM | Order marking plate (HWNP) separately. | Plastic (black) | CWAM | CWAM | 1 | • Marking plate HWNP is necessary.<br>• Degree of protection: IP65<br>• Do not remove the gasket on the operator. 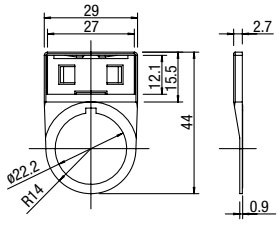 <br>• Cannot be used with HW/FB series control box types. |
| | | | | CWAMPN10 | 10 | |

## Making Plate

| Description | Material | Part No. | Ordering No. | Package Quantity | Dimensions (mm) |
|---|---|---|---|---|---|
| HWNP | Aluminum (black) 1.0 mm thick | HWNP-∗ | HWNP-∗ | 1 | • White legend on black background. 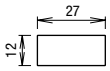  |
| | | | HWNP-∗PN10 | 10 | • Engraving area: W25, H7<br>• Thickness: 1.0 mm |

• Specify a legend code in place of ∗ in the Ordering No.

## Legends

| Code | Legend |
|---|---|
| 0 | (blank) |
| 1 | ON |
| 2 | OFF |
| 3 | START |

| Code | Legend |
|---|---|
| 4 | STOP |
| 31 | OFF-ON |
| 33 | HAND-AUTO |
| 53 | HAND-OFF-AUTO |

## Maintenance Parts

Used for replacement only. Do not use the maintenance parts to remodel or expand the CW series control units.

| Shape | | Material | Part No. | Ordering No. | Package Quantity | Remarks |
|---|---|---|---|---|---|---|
| Button<br>1 2 | 1 For round flush | Polyarylate ø19.5 H3.5 | CW9Z-B11① | CW9Z-B11①PN05 | 5 | • For maintained pushbuttons.<br>• Specify a button color code in place of ① in the Part No.<br>B (black), G (green), R (red), S (blue), W (white), Y (yellow) |
| | 2 For round extended | Polyarylate ø19.5 H6.2 | CW9Z-B12① | CW9Z-B12①PN05 | 5 | |
| Lens<br>2<br>1 3 | 1 Round Flush | Polyalylate | CW9Z-L11② | CW9Z-L11②PN05 | 5 | Color code ②: A (amber), C (clear), G (green), R (red), S (blue), Y (yellow)<br>Use a clear (C) lens for pure white (PW) illumination.<br>1: For illuminated pushbutton, pilot light<br>2: For illuminated pushbutton<br>3: For pilot light |
| | 2 Round Extended | Polyalylate | CW9Z-L12② | CW9Z-L12②PN05 | 5 | |
| | 3 Round Extended | Polyalylate | CW9Z-L15② | CW9Z-L15②PN05 | 5 | |
| Single Contact Block<br>Push rod Housing | | 1NO | YW-E10R | YW-E10R | 1 | Push rod color: black<br>Housing color: blue and black<br>Terminal No.: 3-4 |
| | | 1NC | YW-E01 | YW-E01 | 1 | Push rod color: red<br>Housing color: reddish purple<br>Terminal No.: 1-2 |
| Double Contact Block<br>Push rod Housing<br>(photo: YW-EW1R1) | | 2NO | YW-EW2R0 | YW-EW2R0 | 1 | Push rod color: black<br>Housing color: blue and black<br>Terminal No.<br>1st tier: 13-14<br>2nd tier: 23-24 |
| | | 2NC | YW-EW02 | YW-EW02 | 1 | Push rod color: red<br>Housing color: reddish purple<br>Terminal No.<br>1st tier: 11-12<br>2nd tier: 21-22 |
| | | 1NO, 1NC | YW-EW1R1 | YW-EW1R1 | 1 | Push rod color: gray<br>Housing color: reddish purple/blue<br>Terminal No.<br>1st tier: 13-14<br>2nd tier: 21-22 |
| Dummy Block | | Polyamide (black) | CW-DB | CW-DBPN05 | 5 | |
| Locking Ring | | Polyamide (black) | CW9Z-LN | CW9Z-LNPN05 | 5 | |
| Gasket | | Nitrile rubber | CW9Z-WM | CW9Z-WMPN10 | 10 | Waterproof gasket between CW control unit bezel and the mounting panel.<br>ø21.6 ±0.15<br>ø28.0 ±0.15<br>Thickness: 0.5 |
| Spare Key<br>Non-reversible<br>Reversible | | Zinc (nickel-plated) | LA9Z-SK-□ | LA9Z-SK-□PN02 | 2 | Specify a key No. in place of □.<br>0H: Standard key (reversible)<br>1H to 2H: Reversible key<br>3H to 6H: Non-reversible key<br>For dimensions, see page 19. |

## LED Module

Package quantity: 1

| Shape | Operating Voltage Range | Current Draw | Part No. | Illumination Color Code ② |
|---|---|---|---|---|
| | 6V AC/DC ±10% | 15 mA | CW-EAQ2② | Specify an illumination color code in place of ② in the Part No.<br>A: amber<br>G: green<br>PW: pure white<br>R: red<br>S: blue |
| | 12V AC/DC ±10% | 15 mA | CW-EAQ3② | |
| | 24V AC/DC ±10% | 16.5 mA | CW-EAQ4② | |
| | 100/120V AC ±10% | 18 mA | CW-EAQH② | |
| | 200/220V AC ±10% | 20 mA | CW-EAQM② | |
| | 230/240V AC ±10% | 18 mA | CW-EAQM4② | |

• Use a pure white (PW) LED module for yellow (Y) illumination.

## Safety Precautions

- Turn off the power to the CW series control units before installation, removal, wiring, and maintenance. Failure to turn power off may cause electrical shocks or fire hazard.
- For wiring, use wires of a proper size to meet the voltage and current requirements. Tighten the M3.5 terminal screws to a tightening torque of 1.0 to 1.3 N·m. Failure to tighten the terminal screws may cause overheating and fire.

## Operating Instructions

### Notes for Operation

- When using the CW series control units in a safety-related circuit of a control system, observe safety rules and regulations of each country concerning particular applications of the actual machines and facilities. Perform risk assessment before operation to ensure safety.

### Operating Conditions

- In corrosive gas or high-temperature, high-humidity atmosphere, contact failure due to corrosion or color change or breakage of the housing may occur.
- Main parts of the CW series control units are made of plastics. Do not scratch the surface with a sharp object or apply excessive shocks or load, otherwise the control units may be damaged. In particular, keep the button, lens, and bezel from such damage, otherwise appearance and function may be impaired.
- Do not apply detergents, cutting oils, or chemicals which may impair the function and appearance of the CW series control units.

### Removing and Installing the Contact Unit

1. To remove the contact block from the operator, push the yellow locking lever and turn it to the left.

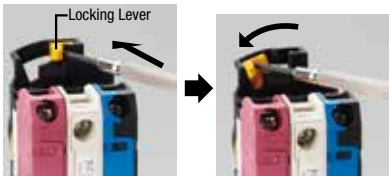


2. To install, align the TOP marking on the operator with the TOP marking on the contact block mounting adaptor, and turn the locking lever to the right.

### Panel Mounting

Remove the contact block from the operator. Remove the locking ring from the operator. Insert the operator into the panel cut-out from the front, tighten the locking ring from the back, then install the contact block to the operator.

### Installation in Panel Cut-out

Remove the locking ring from the operator. With the anti-rotation projection on the operator aligned with the recess in the mounting hole, insert the operator into the mounting hole. Tighten the locking ring from the rear of the panel.

### Note for Panel Mounting

When installing the operator in a panel cut-out, use the optional locking ring wrench (MW9Z-T1) to tighten the locking ring to a recommended tightening torque of 1.2 N·m. Do not use pliers and do not tighten excessively, otherwise the operator may be damaged.

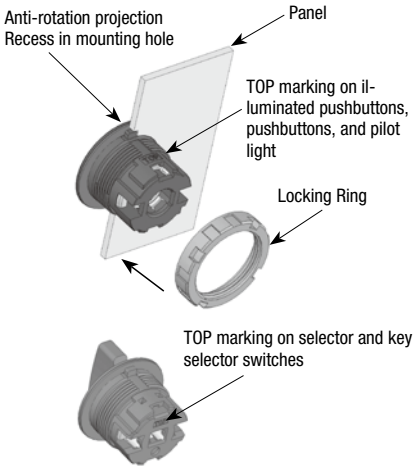


### Mounting Hole

1. Mounting hole dimensions are in compliance with IEC 60947-5-1.
2. If the anti-rotation projection is removed from the bezel, CW series control units can be mounted in ø22.3 mm mounting holes. To remove the anti-rotation projection, remove the gasket and use cutting pliers to break the projection.

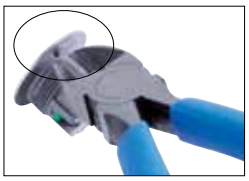

## Operating Instructions

### Pushbuttons (momentary)

Momentary pushbutton caps cannot be removed. Do not tamper with the pushbutton caps using a screwdriver or pliers, otherwise the pushbutton caps may be damaged.

### Pushbuttons (maintained) / Illuminated Pushbuttons / Pilot Lights

#### Removing the button/lens

To remove the button or lens from a pushbutton, illuminated pushbutton or pilot light, insert a flat screwdriver under the flange of the lens at 90° from the TOP marking and twist the screwdriver.

Do not insert the screwdriver too deeply and do not apply excessive force to the lens, otherwise the bezel surface may be damaged.

**[Screwdriver Insertion Direction]**

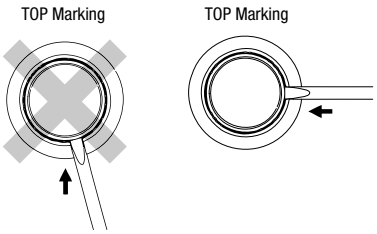


**[Screwdriver Insertion Angle]**

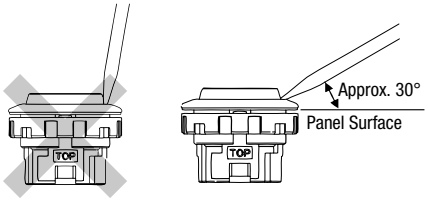


### Installing the Lens

Turn the groove in the lens to the TOP marking on the operator housing. With the groove aligned with the ridge, press the lens in.

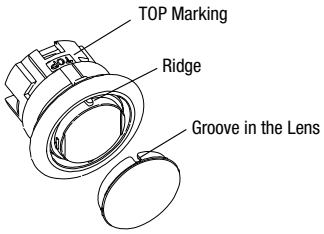


### Marking

Marking plates are not available for CW series illuminated pushbuttons and pilot lights. Marking film can be inserted to indicate legends.

#### Applicable Marking Film Size

| Illuminated Pushbutton (Round Flush)<br>Pilot Light (Round Flush,<br>Round Extended) | Illuminated Pushbutton<br>(Round Extended) |
|---|---|
| 13.8<br>ø15.9 | 12.6<br>ø15.9 |

Thickness: 0.2 mm maximum
Film material: Polyester (recommended)
Note: Film is not supplied and must be prepared by the user.

## Installing the Rubber Boot

When using in places where the switches are subjected to water splash or an excessive amount of dust, make sure to use the optional rubber boot. Mount the rubber boot so that the protrusion at the bottom surface of the operator fits with the recess on the operator, placing the rubber boot all around the operator sleeve. Make sure that the protrusion on the rubber boot and the recess on the operator is properly fitted, otherwise, the waterproof and dustproof characteristics are not ensured.

### How to Install the Rubber Boot

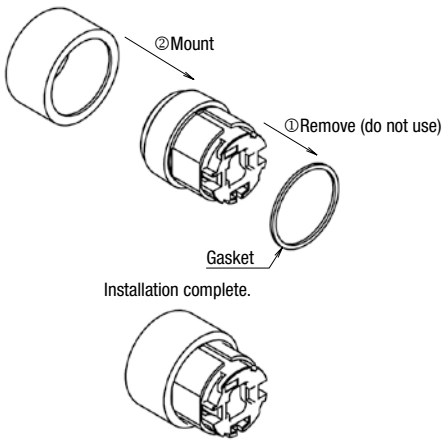


Note: Install the rubber boot before mounting the unit to the panel.

## Maintained

Do not replace the button/lens while the operator is latched. Otherwise the internal structure will be damaged.

## Selector Switches

Turn the selector operator or key to the detent positions.

## Key Selector Switches

To prevent malfunctions and damage, take the following precautions.

- Insert the key to the bottom before turning.
- Do not remove the key while turning.
- Besides the standard key (0H), six other keys are available. Use a key with a key selector switch of a matching number indicated on the key cylinder. Standard key does not have a key number indication.
- Keys are available in two shapes.
  Key numbers 0H (standard), 1H, and 2H are reversible keys.
  Key numbers 3H, 4H, 5H, and 6H are non-reversible keys. Make sure of correct insertion direction.

## Contact Blocks and LED Modules

To remove the contact block from the operator, insert a flat screwdriver under the latch and push down the screwdriver as shown below. Before removing the LED module, first remove all contact blocks, and remove the LED module in the same manner.

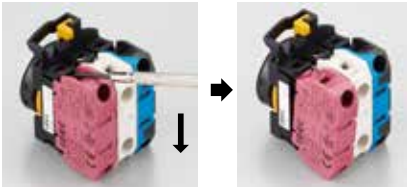

## Nameplate / Marking Plate

- Installing the marking plate on a nameplate

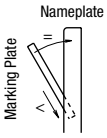


- To remove the marking plate, insert the flat screwdriver between the marking plate and nameplate.

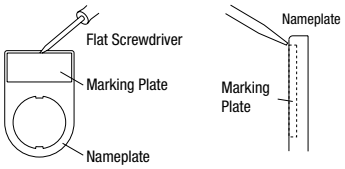


Note: When using a nameplate, the mounting panel thickness is 2.6 mm maximum.

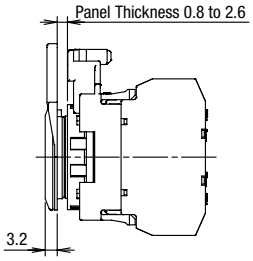


## Wiring

Applicable Wires

Stranded wire: 2.0 $mm^2$ maximum (14AWG)
Solid wire: ø1.6 mm maximum (16AWG)

One or two wires can be connected to the terminal.

### Applicable Crimping Terminals

[Spade terminal]

When using crimping terminals, be sure to use insulating tubes or use insulated crimping terminals.

Note: Ring terminals cannot be used.

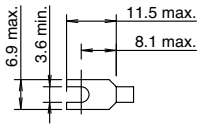


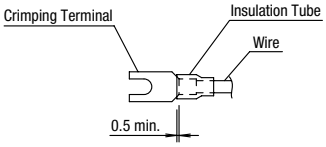


[Ferrule]

When connecting two ferrules to one terminal, use ferrules without insulation.

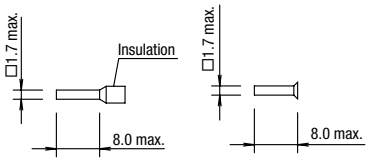


When using spade terminals or ferrules, insert them to the bottom.

[Solid Wire]

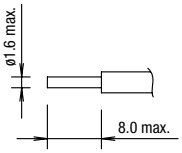



# IDEC CORPORATION

www.idec.com

**Head Office**
6-64, Nishi-Miyahara-2-Chome, Yodogawa-ku, Osaka 532-0004, Japan

| | | | | | | | |
|---|---|---|---|---|---|---|---|
| **USA** | IDEC Corporation | Tel: +1-408-747-0550 | opencontact@idec.com | **Hong Kong** | IDEC Izumi (H.K.) Co., Ltd. | Tel: +852-2803-8989 | info@hk.idec.com |
| **Germany** | APEM GmbH | Tel: +49-40-25 30 54 - 0 | service@eu.idec.com | **China/Shanghai** | IDEC (Shanghai) Corporation | Tel: +86-21-6135-1515 | idec@cn.idec.com |
| **Singapore** | IDEC Izumi Asia Pte. Ltd. | Tel: +65-6746-1155 | info@sg.idec.com | **China/Shenzhen** | IDEC (Shenzhen) Corporation | Tel: +86-755-8356-2977 | idec@cn.idec.com |
| **Thailand** | IDEC Asia (Thailand) Co., Ltd | Tel: +66-2-392-9765 | sales@th.idec.com | **China/Beijing** | IDEC (Beijing) Corporation | Tel: +86-10-6581-6131 | idec@cn.idec.com |
| **Australia** | IDEC Australia Pty. Ltd. | Tel: +61-3-8523-5900 | sales@au.idec.com | **Japan** | IDEC Corporation | Tel: +81-6-6398-2527 | marketing@idec.co.jp |
| **Taiwan** | IDEC Taiwan Corporation | Tel: +886-2-2698-3929 | service@tw.idec.com | | | | |


Specifications and other descriptions in this brochure are subject to change without notice.
2018 IDEC Corporation, All Rights Reserved.

EP1473-7 APRIL 2018