Fieldbus System

(Output device for driving 5 port solenoid valves)

New

CE c UL us

RoHS

Compact 28 mm (Actual size)

Space-saving Installation

EtherNet/IP™ added !

- **IP67***

  * For units with D-sub connector, and when connected to S0700 manifolds, it is IP40.

- **Drives up to 32 solenoids**

Daisy-chain wiring communication

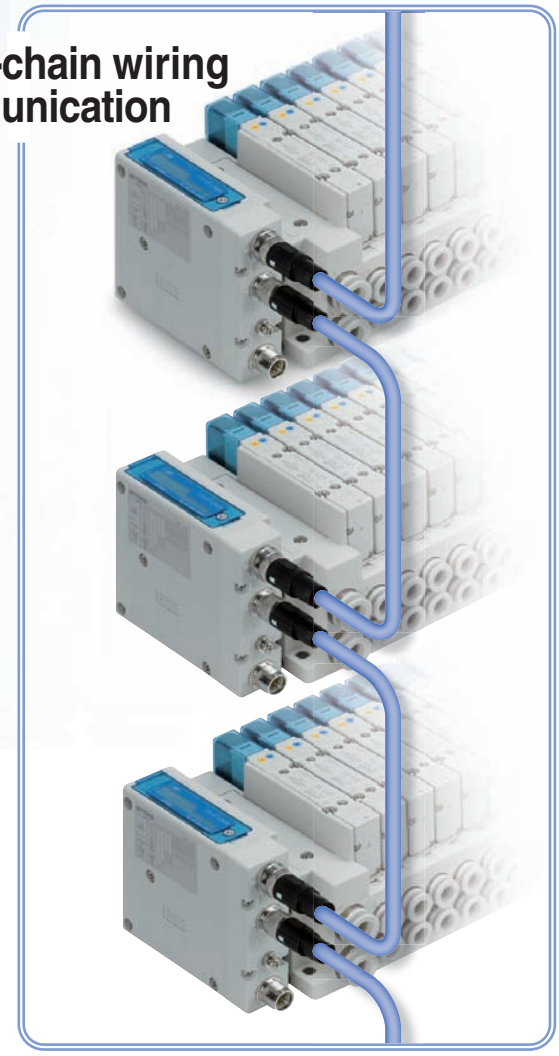

Applicable Fieldbus protocols

PROFIBUS® DeviceNet™ CC-Link

PROFINET® New EtherNet/IP™ EtherCAT®

Top ported valve	Bottom ported valve	Side ported valve Mixed valve sizes manifold	7 mm width valve
	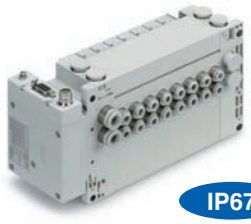		
IP67	IP67	IP67	IP40

Series EX260

SMC

CAT.NAS02-25B

Manifold length is shortened by the small fieldbus output module (SI unit).

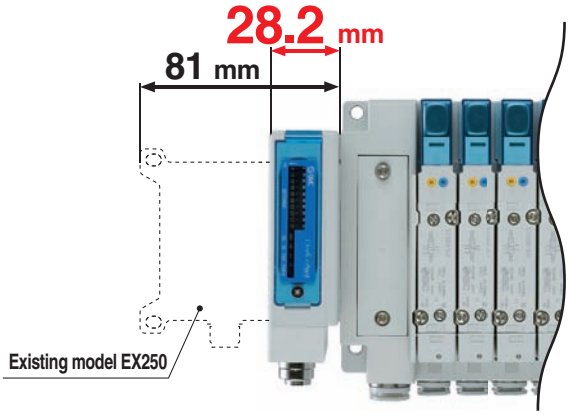

Wiring and piping from the same direction is possible. (for side ported)

Effective for installation in locations where space is limited above the valve.

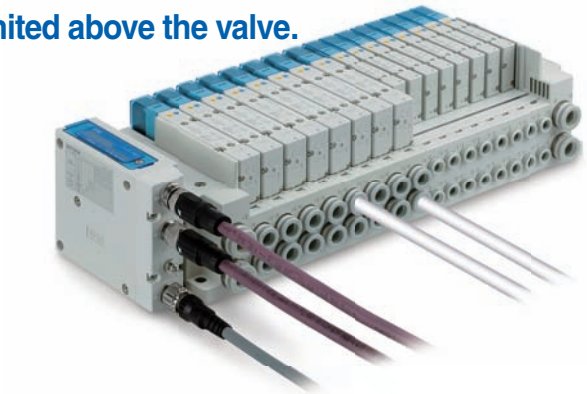

External branch connector is not necessary. Daisy-chain wiring is possible. Reduced wiring space

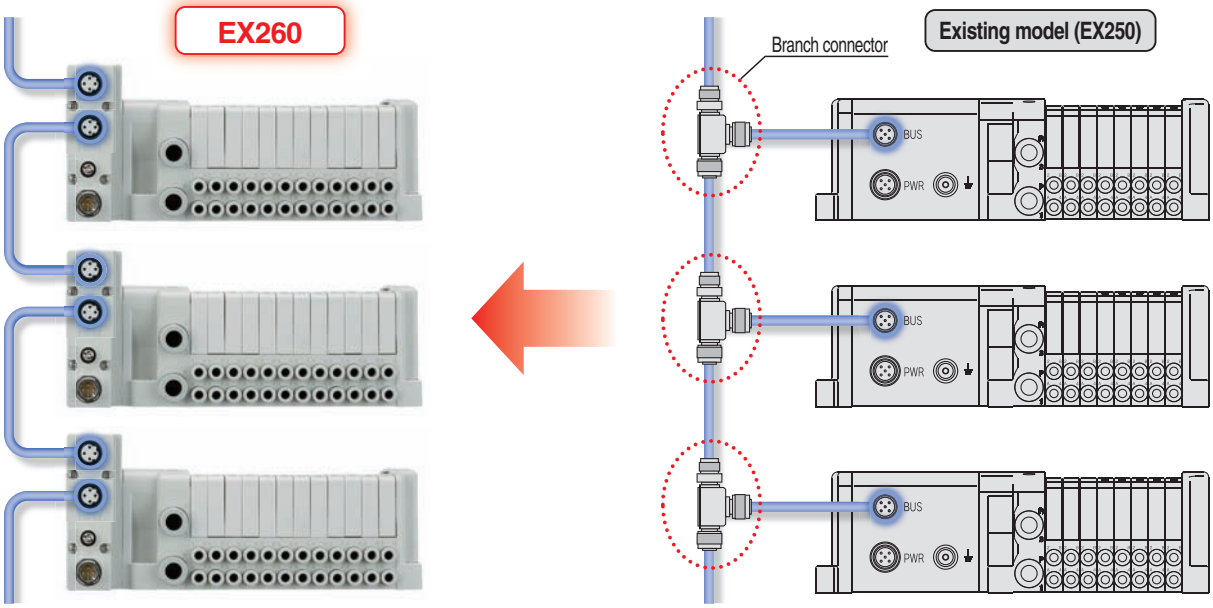

External terminating resistor is not necessary. (Only available for M12 PROFIBUS DP, CC-Link communication connectors)

ON/OFF switching is possible with an internal terminating resistor. External terminating resistor is not necessary.

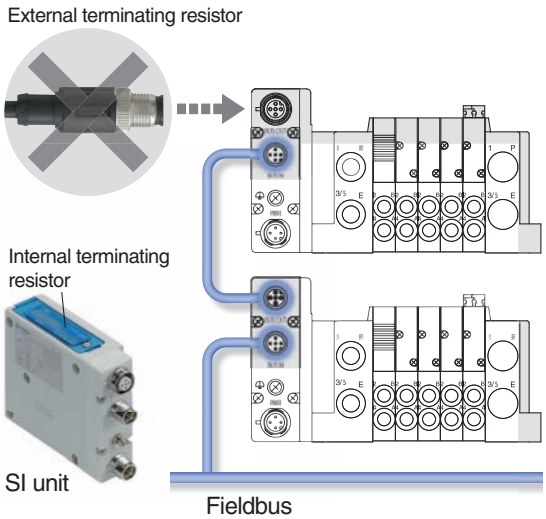

Product Specification Variations

	PROFIBUS	DeviceNet	CC-Link	PROFINET	EtherNet/IP	EtherCAT
Number of outputs	16 32	16 32	16 32	16 32	16 32	16 32
Output polarity	PNP NPN	PNP NPN	PNP NPN	PNP NPN	PNP NPN	PNP NPN
Communication connector	M12 D-sub	M12	M12	M12	M12	M12

■ Communication connector examples

M12 communication connector
(PROFIBUS DP)

D-sub communication connector
(PROFIBUS DP)

Series SY3000/5000

Valve piping direction variations

■ Piping is possible from 3 directions.

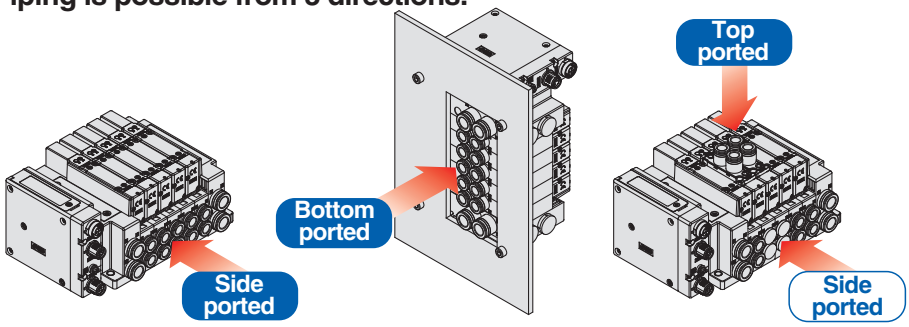

Mixed mounting of top ported and side ported is possible.

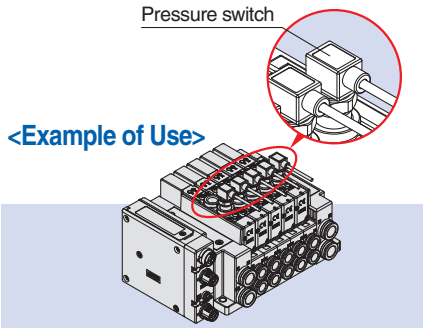

By mounting top ported valves on side ported and bottom ported type manifolds, it is possible to detect the output of the A/B port with a pressure switch.

Valves can be freely connected up to 24 stations.

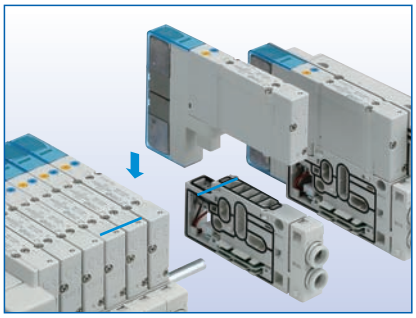

■ It is possible to connect only the number of valves required, from 1 to 24 stations, to suit the application. (Maximum number of solenoids connected: 32)

Mixed valve sizes manifold

■ Valves of different sizes, SY3000 and SY5000, can be mounted on the same manifold.

Series S0700

7 mm width valves can be connected.

■ It is possible to connect only the number of 7 mm width valves required, from 1 to 24 stations. (Maximum number of solenoids connected: 32)

● Applicable Valve Series

Series		Flow-rate characteristics (4/2→5/3) C [dm³/(s·bar)]	b	Maximum number of solenoids	Power consumption (W)	Enclosure	Standards	Page
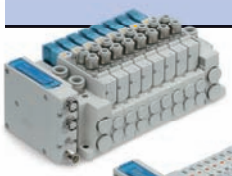	SY3000	1.6	0.19	32	0.35 (standard) 0.1 (with power-saving circuit)	IP67	CE	page 7
	SY5000	3.6	0.17					
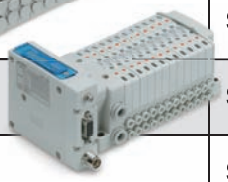	S0700	0.37	0.39	32	0.35	IP40	CE	page 38
	SV1000	1.1	0.35	32	0.6	IP67	CE UL	page 24
	SV2000	2.4	0.18					
	SV3000	4.3	0.21					
	VQC1000	1.0	0.30	24	0.4 (standard)	IP67	CE	page 29
	VQC2000	3.2	0.30					
	VQC4000	7.3	0.38		1.0 (standard)			

Note) For units with D-sub communication connector, it is IP40.

Fieldbus System Variations IP67/65 specification models

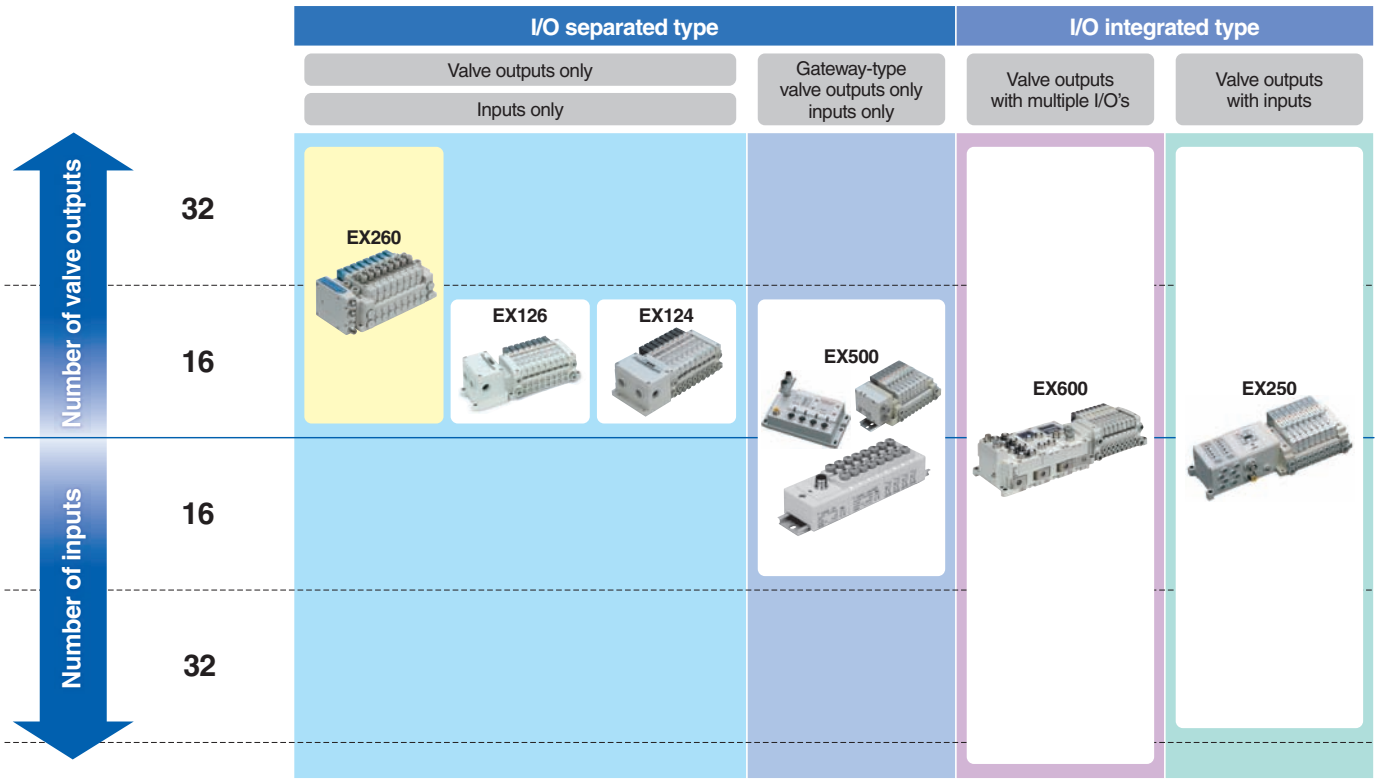

	Number of valve outputs		16			32	16 (total 64)	32	32
	Number of inputs		None				16 (total 64)	144	32
	SI unit series		EX260	EX126	EX124	EX260	EX500	EX600	EX250
Open network	PROFINET		●			●			
	EtherCAT		●			●		●	
	EtherNet/IP™		●			●	●	●	●
	PROFIBUS DP		●			●	●	●	●
	DeviceNet™		●		●	●	●	●	●
	CC-Link		●	●	●	●	●	●	●
	AS-Interface								●
	CANopen								●
	CompoNet™								
Applicable valve series	SY (Plug-in connector connecting base)	3000	●	●		●	●	●	●
		5000	●	●		●	●	●	●
	S0700 (Stacking base)	0700	●			●	●	●	●
	SV	1000	●	●		●	●	●	●
		2000	●	●		●	●	●	●
		3000	●	●		●	●	●	●
		4000					●		
	VQC	1000	●	●		●	●	●	●
		2000	●	●		●	●	●	●
		4000	●	●		●	●	●	●
	VQ	1000							
		2000			●				
		4000			●				
		5000			●				

Fieldbus System Variations IP20 specification models

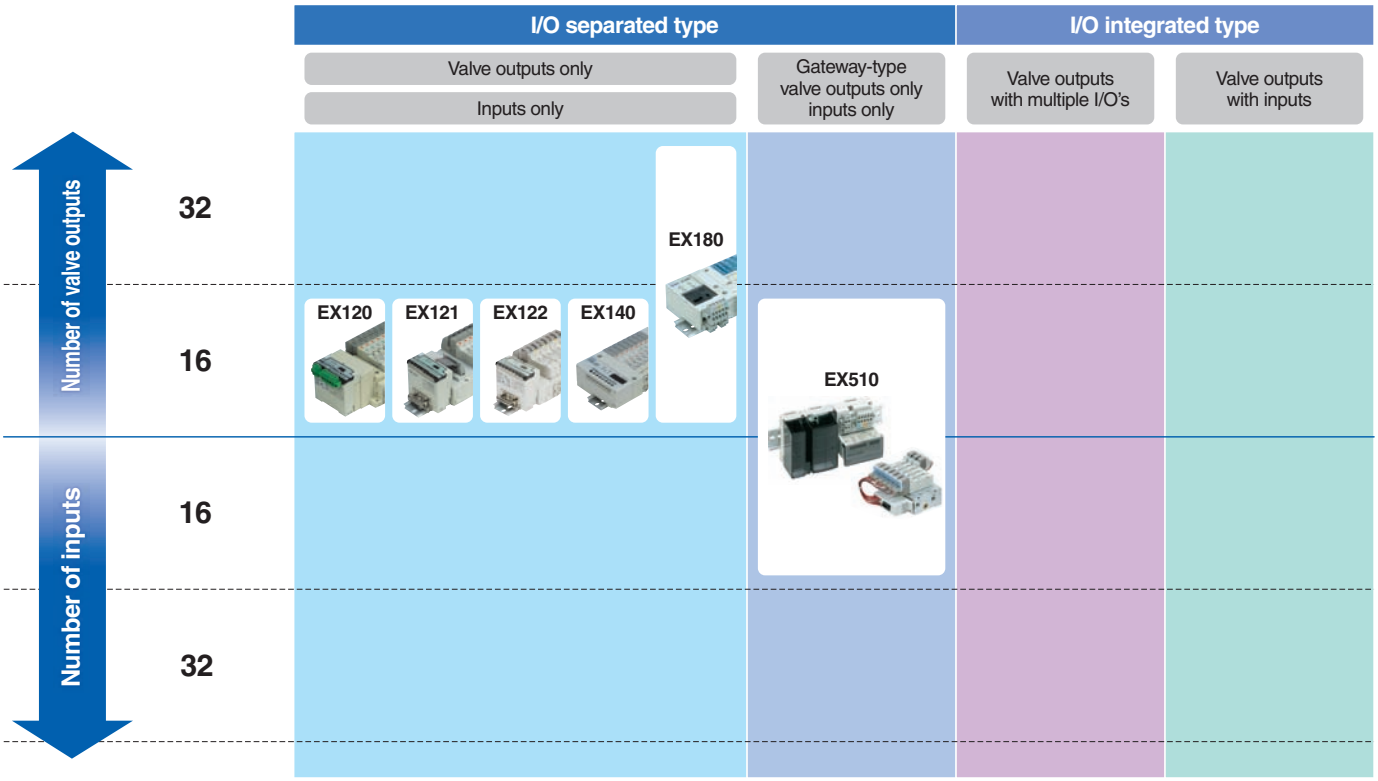

	Number of valve outputs		16				32	16 (total 64)
	Number of inputs		None					16 (total 64)
	SI unit series		EX120	EX121	EX122	EX140	EX180	EX510
Open network	PROFINET							
	EtherCAT							
	EtherNet/IP™							
	PROFIBUS DP							●
	DeviceNet™		●	●	●	●	●	●
	CC-Link		●	●	●	●	●	●
	AS-Interface							
	CANopen							
	CompoNet™		●	●	●			
Applicable valve series	SY (Plug-in connector connecting base)	3000	●					
		5000	●					
	SJ	2000					●	●
		3000					●	●
	SY (Plug-in metal base)	3000						●
		5000						●
	S0700 (Bar stock)	0700					●	●
	SY (Bar stock)	3000						●
		5000						●
		7000						●
	SY (Stacking base)	3000		●	●			●
		5000		●	●			●
		7000						●
	SV	1000	●					
		2000	●					
		3000	●					
		4000	●					
	VQ	1000	●					●
		2000	●					●
		4000						
		5000						
	SQ	1000				●		●
		2000				●		●
	SZ	3000				●		●
	VQZ	1000						●
		2000						●
		3000						●
	SYJ	3000						●
		5000						●
		7000						●

SI Unit Integrated-type/For Output

Series EX260

Note)

Compact design	Compact design for space saving
Number of outputs	Each 32/16 digital output type available in the series
Output polarity	Each negative common (PNP) / positive common (NPN) type available in the series
Enclosure	IP67 (For units with D-sub connector, and when connected with S0700 manifolds, it is IP40.)
Internal terminating resistor	ON/OFF switching is possible with an internal terminating resistor for communication. (Only for units compatible with M12 PROFIBUS DP, CC-Link communication connectors)

SY3000/5000

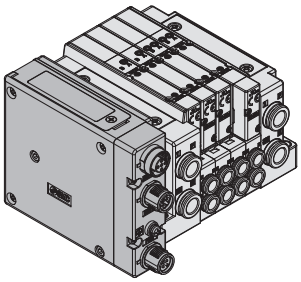

VQC1000/2000/4000

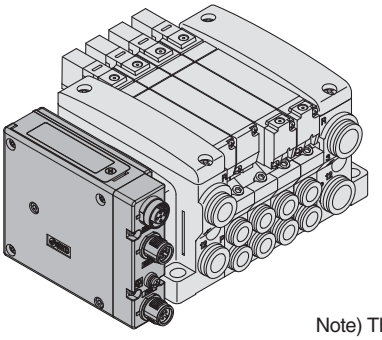

S0700

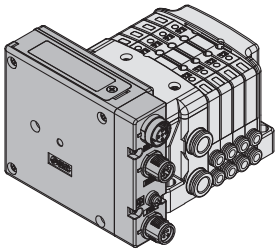

SV1000/2000/3000

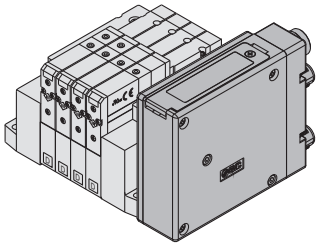

Note) The SY3000/5000, VQC1000/2000/4000, and S0700 are not yet UL-compatible.

How to Order SI Units

EX260 – S PR1

● **Communication protocol**

Symbol	Protocol	Number of outputs	SI unit output polarity	Communication connector	Manifold symbol
DN1	DeviceNet™	32	Source/PNP (Negative common)	M12	QAN
DN2			Sink/NPN (Positive common)		QA
DN3		16	Source/PNP (Negative common)		QBN
DN4			Sink/NPN (Positive common)		QB
PR1	PROFIBUS DP	32	Source/PNP (Negative common)	M12	NAN
PR2			Sink/NPN (Positive common)		NA
PR3		16	Source/PNP (Negative common)		NBN
PR4			Sink/NPN (Positive common)		NB
PR5		32	Source/PNP (Negative common)	D-sub Note)	NCN
PR6			Sink/NPN (Positive common)		NC
PR7		16	Source/PNP (Negative common)		NDN
PR8			Sink/NPN (Positive common)		ND
MJ1	CC-Link	32	Source/PNP (Negative common)	M12	VAN
MJ2			Sink/NPN (Positive common)		VA
MJ3		16	Source/PNP (Negative common)		VBN
MJ4			Sink/NPN (Positive common)		VB
EC1	EtherCAT	32	Source/PNP (Negative common)	M12	DAN
EC2			Sink/NPN (Positive common)		DA
EC3		16	Source/PNP (Negative common)		DBN
EC4			Sink/NPN (Positive common)		DB
PN1	PROFINET	32	Source/PNP (Negative common)	M12	FAN
PN2			Sink/NPN (Positive common)		FA
PN3		16	Source/PNP (Negative common)		FBN
PN4			Sink/NPN (Positive common)		FB
EN1	EtherNet/IP™	32	Source/PNP (Negative common)	M12	EAN
EN2			Sink/NPN (Positive common)		EA
EN3		16	Source/PNP (Negative common)		EBN
EN4			Sink/NPN (Positive common)		EB

Note) Enclosure is IP40 when the communication connector is D-sub.

SI Unit Specifications

Model		EX260-SPR1/3	EX260-SPR2/4	EX260-SPR5/7	EX260-SPR6/8	EX260-SDN1/3	EX260-SDN2/4	EX260-SMJ1/3	EX260-SMJ2/4
Applicable system	Protocol	PROFIBUS DP				DeviceNet™		CC-Link	
	Version Note 1)	DP-V0				Volume 1(Edition 3.5) Volume 3(Edition 1.5)		Ver.1.10	
	Configuration file Note 3)	GSD file				EDS file		—	
I/O occupation area (Inputs/Outputs)		SPR1: 0/32 SPR3: 0/16	SPR2: 0/32 SPR4: 0/16	SPR5: 0/32 SPR7: 0/16	SPR6: 0/32 SPR8: 0/16	SDN1: 0/32 SDN3: 0/16	SDN2: 0/32 SDN4: 0/16	SMJ1: 32/32 SMJ3: 32/32 (1 station, remote I/O stations)	SMJ2: 32/32 SMJ4: 32/32 (1 station, remote I/O stations)
Communication speed		9.6 k/19.2 k/45.45 k/93.75 k/ 187.5 k/500 k/1.5 M/3 M/6 M/12 Mbps				125 k/250 k/500 kbps		156 k/625 k/ 2.5 M/5 M/10 Mbps	
Power supply for control	Power supply voltage	21.6 to 26.4 VDC				—		21.6 to 26.4 VDC	
	Internal current consumption	100 mA or less				—		100 mA or less	
Power supply for output	Power supply voltage	—		22.8 to 26.4 VDC					
Power supply for communication	Power supply voltage	—				11 to 25 VDC		—	
	Internal current consumption					100 mA or less		—	
Communication connector specification		M12		D-sub		M12			
Terminating resistor switch		Built-in		None				Built-in	
Output	Output type	Source/PNP (Negative common)	Sink/NPN (Positive common)	Source/PNP (Negative common)	Sink/NPN (Positive common)	Source/PNP (Negative common)	Sink/NPN (Positive common)	Source/PNP (Negative common)	Sink/NPN (Positive common)
	Number of outputs	SPR1: 32 points SPR3: 16 points	SPR2: 32 points SPR4: 16 points	SPR5: 32 points SPR7: 16 points	SPR6: 32 points SPR8: 16 points	SDN1: 32 points SDN3: 16 points	SDN2: 32 points SDN4: 16 points	SMJ1: 32 points SMJ3: 16 points	SMJ2: 32 points SMJ4: 16 points
	Load	Solenoid valve with protective circuit for surge voltage of 24 VDC/1.5 W or less (SMC)							
	Supplied voltage	24 VDC							
	Supplied current	SPR1: Max. 2.0 A SPR3: Max. 1.0 A	SPR2: Max. 2.0 A SPR4: Max. 1.0 A	SPR5: Max. 2.0 A SPR7: Max. 1.0 A	SPR6: Max. 2.0 A SPR8: Max. 1.0 A	SDN1: Max. 2.0 A SDN3: Max. 1.0 A	SDN2: Max. 2.0 A SDN4: Max. 1.0 A	SMJ1: Max. 2.0 A SMJ3: Max. 1.0 A	SMJ2: Max. 2.0 A SMJ4: Max. 1.0 A
Environmental resistance	Enclosure	IP67		IP40		IP67			
	Operating temperature range	14 to 122°F (–10 to 50°C)							
	Operating humidity range	35 to 85%RH (No condensation)							
	Withstand voltage	500 VAC for 1 minute between terminals and housing							
	Insulation resistance	10 MΩ or more (500 VDC measured via megohmmeter) between terminals and housing							
Standards		CE marking, UL (CSA) compatible							
Weight		0.44 lbs (200 g)							
Accessories	Mounting screw	2 pcs.							
	Seal cap (for M12 connector socket)	EX9-AWTS (1 pc.)		—		EX9-AWTS (1 pc.)			

Model		EX260-SEC1/3	EX260-SEC2/4	EX260-SPN1/3	EX260-SPN2/4	EX260-SEN1/3	EX260-SEN2/4
Applicable system	Protocol	EtherCAT Note 2)		PROFINET Note 2)		EtherNet/IP™ Note 2)	
	Version Note 1)	Conformance Test Record V.1.1		PROFINET Specification Version 2.2		Volume 1(Edition 3.8) Volume 2(Edition 1.9)	
	Configuration file Note 3)	XML file		GSD file		EDS file	
I/O occupation area (Inputs/Outputs)		SEC1: 0/32 SEC3: 0/16	SEC2: 0/32 SEC4: 0/16	SPN1: 0/32 SPN3: 0/16	SPN2: 0/32 SPN4: 0/16	SEN1: 16/32 SEN3: 16/16	SEN2: 16/32 SEN4: 16/16
Communication speed		100 Mbps Note 2)				10 M/100 Mbps Note 2)	
Power supply for control	Power supply voltage	21.6 to 26.4 VDC					
	Internal current consumption	100 mA or less					
Power supply for output	Power supply voltage	22.8 to 26.4 VDC					
Power supply for communication	Power supply voltage	—					
	Internal current consumption	—					
Communication connector specification		M12					
Terminating resistor switch		None					
Output	Output type	Source/PNP (Negative common)	Sink/NPN (Positive common)	Source/PNP (Negative common)	Sink/NPN (Positive common)	Source/PNP (Negative common)	Sink/NPN (Positive common)
	Number of outputs	SEC1: 32 points SEC3: 16 points	SEC2: 32 points SEC4: 16 points	SPN1: 32 points SPN3: 16 points	SPN2: 32 points SPN4: 16 points	SEN1: 32 points SEN3: 16 points	SEN2: 32 points SEN4: 16 points
	Load	Solenoid valve with protective circuit for surge voltage of 24 VDC/1.5 W or less (SMC)		Solenoid valve with protective circuit for surge voltage of 24 VDC/1.0 W or less (SMC)		Solenoid valve with protective circuit for surge voltage of 24 VDC/1.5 W or less (SMC)	
	Supplied voltage	24 VDC					
	Supplied voltage	SEC1: Max. 2.0 A SEC3: Max. 1.0 A	SEC2: Max. 2.0 A SEC4: Max. 1.0 A	SPN1: Max. 2.0 A SPN3: Max. 1.0 A	SPN2: Max. 2.0 A SPN4: Max. 1.0 A	SEN1: Max. 2.0 A SEN3: Max. 1.0 A	SEN2: Max. 2.0 A SEN4: Max. 1.0 A
Environmental resistance	Enclosure	IP67					
	Operating temperature range	14 to 12°F (–10 to 50°C)					
	Operating humidity range	35 to 85%RH (No condensation)					
	Withstand voltage	500 VAC for 1 minute between terminals and housing					
	Insulation resistance	10 MΩ or more (500 VDC measured via megohmmeter) between terminals and housing					
Standards		CE marking, UL (CSA) compatible					
Weight		0.44 lbs (200 g)					
Accessories	Mounting screw	2 pcs.					
	Seal cap (for M12 connector socket)	EX9-AWTS (1 pc.)					

Note 1) Please note that the version is subject to change.
Note 2) Use a CAT5 or higher transmission cable for EtherCAT, PROFINET, EtherNet/IP™.
Note 3) Each file can be downloaded from the SMC website, http://www.smcworld.com

SI Unit Dimensions

(mm)

M12 communication connector type

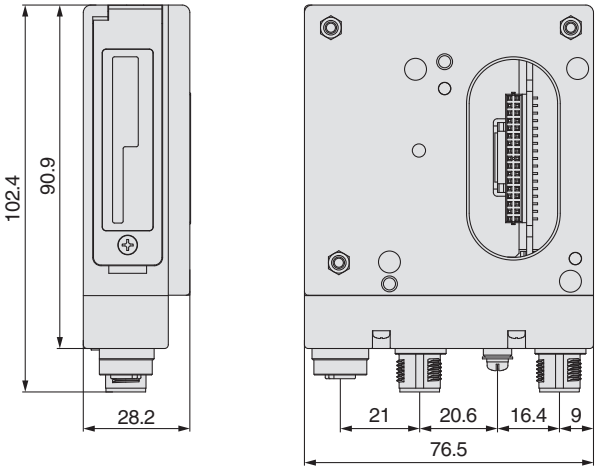

D-sub communication connector type

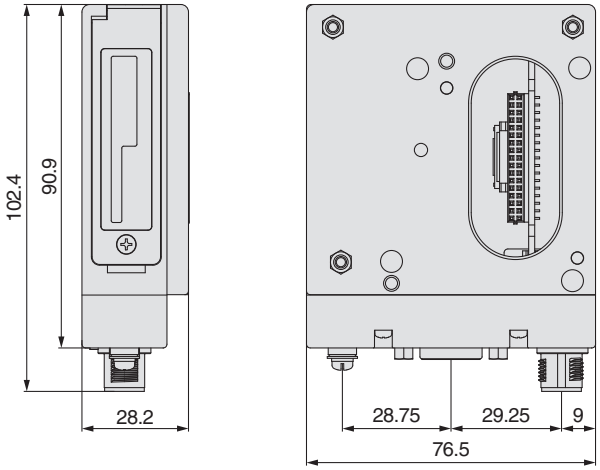

Functions of SI Unit Parts

<LED indication and setting switch>

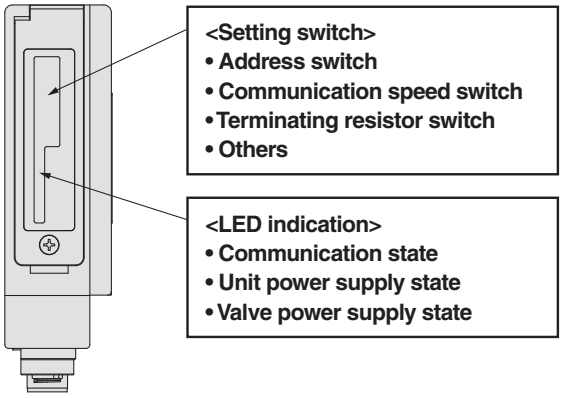

Note) The setting switch varies depending on the model.
Refer to the operation manual for details.
Please download it via the SMC website, http://www.smcworld.com

<Connector>
M12 communication connector type

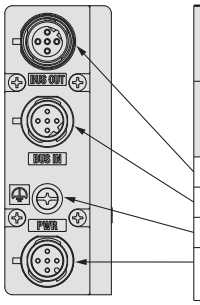

Part no.	EX260-SPR1/-SPR2 -SPR3/-SPR4	EX260-SDN□	EX260-SMJ□	EX260-SEC□ EX260-SPN□ EX260-SEN□
Communication protocol	PROFIBUS DP	DeviceNet™	CC-Link	EtherCAT PROFINET EtherNet/IP™
Communication connector (M12) BUS OUT	5 pins, socket, B code	5 pins, socket, A code	5 pins, socket, A code	4 pins, socket, D code
Communication connector (M12) BUS IN	5 pins, plug, B code	5 pins, plug, A code	4 pins, plug, A code	4 pins, socket, D code
Ground terminal	M3			
Power connector (M12)	5 pins, plug, A code	4 pins, plug, A code	5 pins, plug, B code	5 pins[Note1], 4 pins[Note2], plug, A code

Note 1) For EtherCAT, PROFINET
Note 2) For EtherNet/IP™

D-sub communication connector type

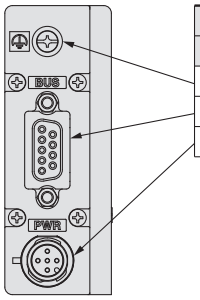

Part no.	EX260-SPR5/-SPR6/-SPR7/-SPR8
Communication protocol	PROFIBUS DP
Ground terminal	M3
Communication connector (D-sub) BUS IN/OUT	9 pins, socket
Power connector (M12)	5 pins, plug, A code

Accessories

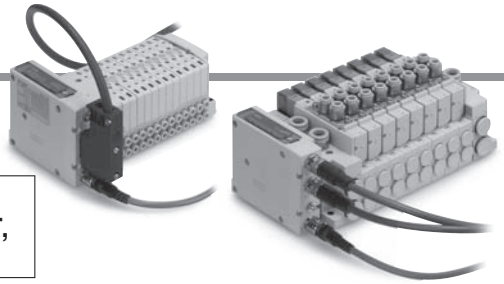

① Communication cable with connector

For SI units compatible with PROFIBUS DP, DeviceNet™, CC-Link

For SI units compatible with EtherCAT, PROFINET, EtherNet/IP™

Refer to the catalog (CAT. NAS100-73) for details.

EX9 – AC 020 EN – PSRJ

Cable length (L)

010	1000 [mm]
020	2000 [mm]
030	3000 [mm]
050	5000 [mm]
100	10000 [mm]

Connector specification

PSRJ	M12 plug (straight) ⇔ RJ-45 connector

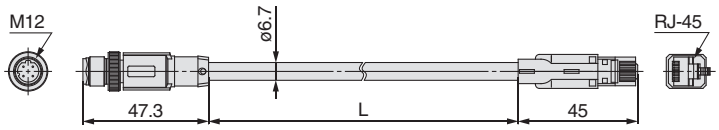

Plug connector pin arrangement
D code

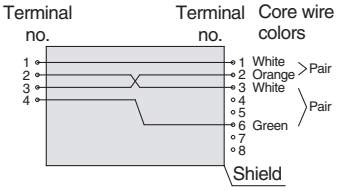

Connections (Straight cable)

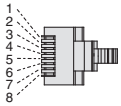

Plug connector pin arrangement

For SI units compatible with EtherCAT, PROFINET, EtherNet/IP™

PCA–1446566

Cable length

1446566	5000 [mm]

Plug connector pin arrangement
D code

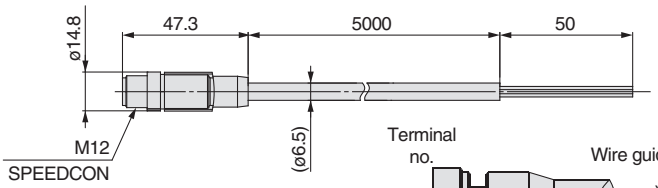

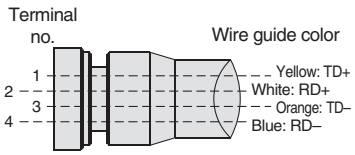

Connections

For SI units compatible with EtherCAT, PROFINET, EtherNet/IP™

Fieldwireable connector

PCA–1446553

Plug connector pin arrangement
D code

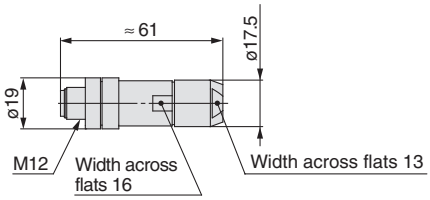

Accessories

② Power cable with connector (for SI units)

For SI units compatible with PROFIBUS DP, DeviceNet™, EtherCAT, PROFINET, EtherNet/IP™

EX500 – AP 050 – S

Cable length (L)

010	1000 [mm]
050	5000 [mm]

Connector specification

S	Straight
A	Angle

Straight connector type

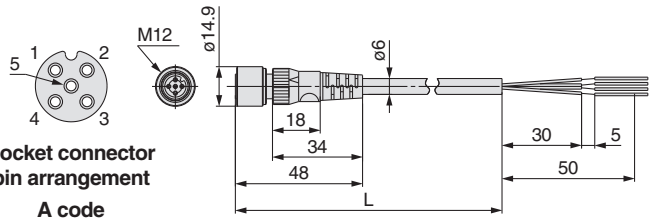

Socket connector pin arrangement
A code

Angle connector type

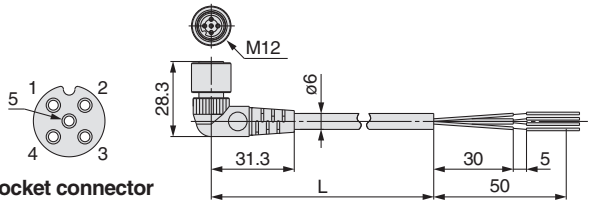

Socket connector pin arrangement
A code

SPEEDCON

PCA– 1401804

Cable length (L)

1401804	1500 [mm]
1401805	3000 [mm]
1401806	5000 [mm]

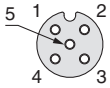

Socket connector pin arrangement
A code

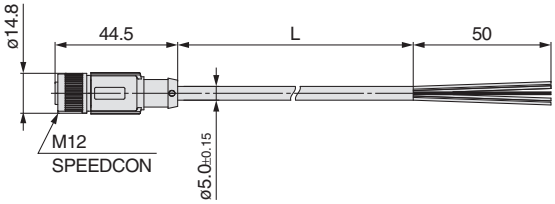

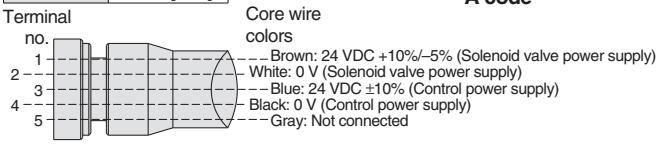

Connections (PROFIBUS DP/EtherCAT)

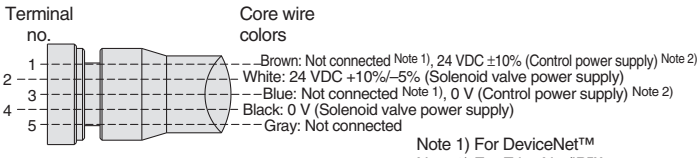

Connections (DeviceNet™, EtherNet/IP™)

Note 1) For DeviceNet™
Note 2) For EtherNet/IP™

For SI units compatible with CC-Link

Straight connector type

EX9 – AC 050 – 1

Cable length (L)

010	1000 [mm]
030	3000 [mm]
050	5000 [mm]

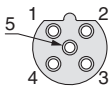

Socket connector pin arrangement
B code

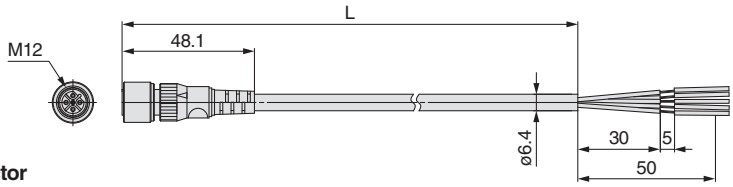

SPEEDCON

PCA– 1401807

Cable length (L)

1401807	1500 [mm]
1401808	3000 [mm]
1401809	5000 [mm]

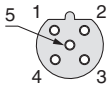

Socket connector pin arrangement
B code

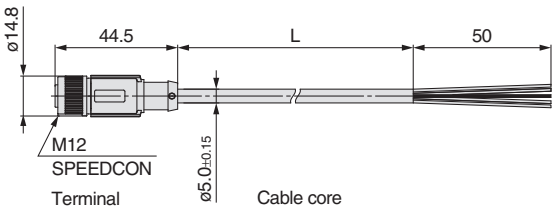

Connections

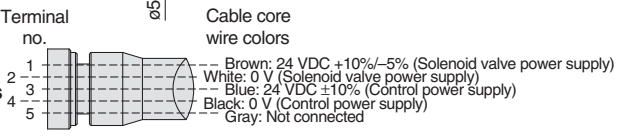

③ Seal cap: For M12 connector socket

Use this on ports that are not being used for communication connector (M12 connector socket).
Use of this seal cap maintains the integrity of the IP67 enclosure.
Note) Tighten the seal cap with the prescribed tightening torque. (For M12: 0.07 lbf·ft (0.1 N·m)

EX9 – AW TS

Connector type

TS	For M12 connector socket (10 pcs.)

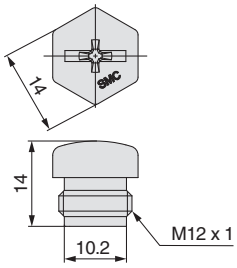

For M12 connector socket

Manifold Solenoid Valves for *Series EX260* Integrated-type (For Output) Serial Transmission System

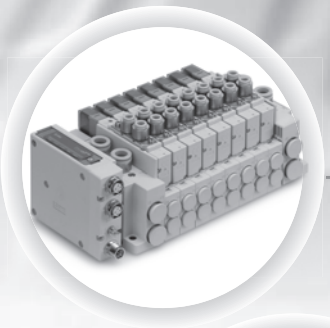

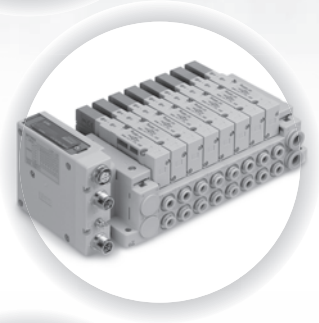

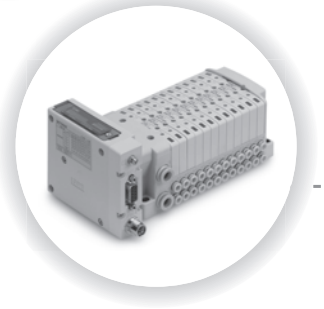

Type 10
Side Ported

Type 11
Bottom Ported

Plug-in Connector Connecting Base: For EX260 Integrated-type (For Output) Serial Transmission System

Series SY3000/5000

CE RoHS

How to Order Manifold

Refer to page 11 for Type 11/Bottom ported dimensions.

SS5Y 3 – 10 S NA N – 05 U □ – C6 □

❶ ❷ ❸ ❹ ❺ ❻ ❼ ❽ ❾

❶ Series

3	SY3000
5	SY5000

❷ Type

10	Side ported
11	Bottom ported*

* The SY5000 manifold base is used for the bottom ported of the SY3000. When ordering, refer to Plug-in Mixed Type Manifold (from page 17).

❸ SI unit specifications

Symbol	Protocol	Number of outputs	Communication connector
0	Without SI unit		
QA	DeviceNet™	32	M12
QB		16	
NA	PROFIBUS DP	32	M12
NB		16	
NC		32	D-sub Note)
ND		16	
VA	CC-Link	32	M12
VB		16	
DA	EtherCAT	32	M12
DB		16	
FA	PROFINET	32	M12
FB		16	
EA	EtherNet/IP™	32	M12
EB		16	

Note) IP40 for the D-sub applicable communication connector specification.
For SI unit part number, refer to page 1.
DIN rail and SI unit output polarity "N" cannot be selected for the product without SI unit.

❹ SI unit output polarity

Nil	Positive common
N	Negative common

Note 1) Ensure a match with the common specifications of the valve to be used.
Note 2) Without SI unit, the symbol is nil.

❺ Valve stations

In the case of the 32-output SI unit

Symbol	Stations	Note
02	2 stations	Double wiring Note 1)
⋮	⋮	
16	16 stations	
02	2 stations	Specified layout Note 2) (Available up to 32 solenoids)
⋮	⋮	
24	24 stations	

In the case of the 16-output SI unit

Symbol	Stations	Note
02	2 stations	Double wiring Note 1)
⋮	⋮	
08	8 stations	
02	2 stations	Specified layout Note 2) (Available up to 16 solenoids)
⋮	⋮	
16	16 stations	

Note 1) Double wiring: 2-position single, double, 3-position and 4-position valves can be used on all manifold stations.
Use of a 2-position single solenoid will result in an unused control signal. If this is not desired, order with a specified layout.
Note 2) Specified layout: Indicate the wiring specifications on the manifold specification sheet.
(Note that 2-position double, 3-position and 4-position valves cannot be used where single wiring has been specified.)
Note 3) Includes the number of blanking plate assemblies.
Note 4) For the model without the SI unit (S0), note the maximum number of solenoids of the SI unit that will be mounted. If the layout is specified, indicate it on the manifold specification sheet.

❻ P, E port entry

U	U side (2 to 10 stations)
D	D side (2 to 10 stations)
B	Both sides (2 to 24 stations)

❼ SUP/EXH block assembly

Nil	Internal pilot
S	Internal pilot, Built-in silencer
R	External pilot

* 3/5(E) port is plugged for the built-in silencer type.
* When the built-in silencer type is used, keep the exhaust port from coming in direct contact with water or other liquids.

❾ Mounting and Option

Symbol	Mounting	Option
Nil	Direct mounting	None
AA		Name plate (With station number)
BA		Name plate (Without station number)
D□	DIN rail mounting	Without name plate
A□		Name plate (With station number)
B□		Name plate (Without station number)

Note 1) Enter the number of stations inside □. (Refer to "DIN Rail Option" below.)
Note 2) Only direct mounting is available for Type 11 (Bottom ported).

DIN Rail Option

Nil	Direct mounting	
0	Without DIN rail (with bracket)	
3	For 3 stations	Specify a longer rail than the total length of specified stations.
⋮	⋮	
24	For 24 stations	

* When it is necessary to mount a DIN rail without an SI unit, select D0 and order DIN rail length separately, referring to L3 in the dimensions. Refer to the SY3000/5000 series catalog (CAT. NAS11-103) for part numbers of DIN rail.

❽ A, B port size (Metric)

Symbol		A, B port	Type 10/ Side ported SY3000	Type 10/ Side ported SY5000	Type 11/ Bottom ported SY5000
C2	Straight	ø2 One-touch fitting	●	—	—
C3	Straight	ø3.2 One-touch fitting	●	—	—
C4	Straight	ø4 One-touch fitting	●	—	●
C6	Straight	ø6 One-touch fitting	●	●	●
C8	Straight	ø8 One-touch fitting	—	●	●
CM*	Straight	Straight port, mixed sizes	●	●	●
L4	Elbow Upward	ø4 One-touch fitting	●	●	—
L6	Elbow Upward	ø6 One-touch fitting	●	●	—
L8	Elbow Upward	ø8 One-touch fitting	—	●	—
B4	Elbow Downward	ø4 One-touch fitting	●	●	—
B6	Elbow Downward	ø6 One-touch fitting	●	●	—
B8	Elbow Downward	ø8 One-touch fitting	—	●	—
LM*	Elbow	Elbow port, mixed sizes (Including upward and downward piping)	●	●	—
P, E port size (One-touch fittings)			ø8	ø10	ø10

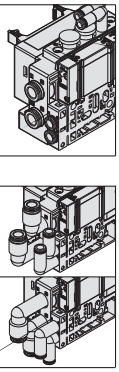

Note) To avoid interference with the body or piping, select downward elbow port when mounting the optional spacer assembly (Refer to the SY3000/ 5000 series catalog (CAT. NAS11-103)).

A, B port size (Inch)

Symbol		A, B port	Type 10/ Side ported SY3000	Type 10/ Side ported SY5000	Type 11/ Bottom ported SY5000
N1	Straight	ø1/8" One-touch fitting	●	—	—
N3	Straight	ø5/32" One-touch fitting	●	●	●
N7	Straight	ø1/4" One-touch fitting	●	●	●
N9	Straight	ø5/16" One-touch fitting	—	●	●
CM*	Straight	Straight port, mixed sizes	●	●	●
LN3	Elbow Upward	ø5/32" One-touch fitting	●	—	—
LN7	Elbow Upward	ø1/4" One-touch fitting	●	●	—
LN9	Elbow Upward	ø5/16" One-touch fitting	—	●	—
BN3	Elbow Downward	ø5/32" One-touch fitting	●	—	—
BN7	Elbow Downward	ø1/4" One-touch fitting	●	●	—
BN9	Elbow Downward	ø5/16" One-touch fitting	—	●	—
LM*	Elbow	Elbow port, mixed sizes (Including upward and downward piping)	●	●	—
P, E port size (One-touch fittings)			ø5/16"	ø3/8"	ø3/8"

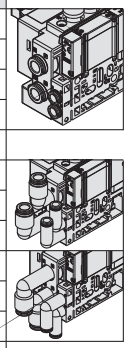

* Indicate the sizes on the manifold specification sheet in the case of "CM", "LM".
* The direction of P, E port fittings is the same as for A, B port. If selecting "LM", indicate it on the manifold specification sheet for the P, E port fitting direction.

How to Order Manifold Assembly

Example (SS5Y3-10SNAN-□)

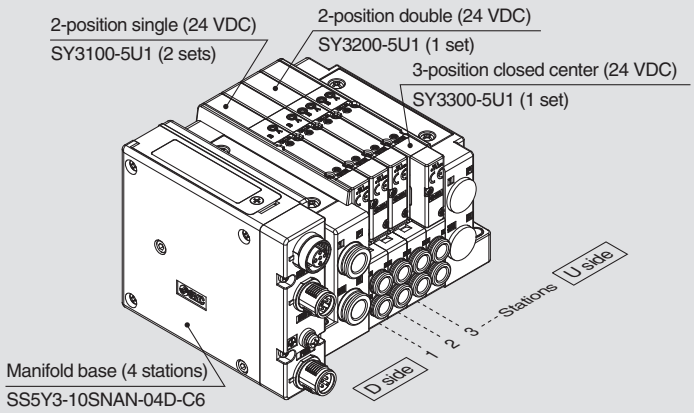

SS5Y3-10SNAN-04D-C6 ···1 set (Type 10 4-station manifold base part no.)
∗SY3100-5U1 ·····2 sets (2-position single part no.)
∗SY3200-5U1 ·····1 set (2-position double part no.)
∗SY3300-5U1 ·····1 set (3-position closed center part no.)
∗The asterisk denotes the symbol for assembly.
∗Prefix it to the part nos. of the valve, etc.

- The valve arrangement is numbered as the 1st station from the D side.
- Under the manifold part number, state the valves to be mounted in order from the 1st station as shown in the figure above.
  If the arrangement becomes complicated, specify on a manifold specification sheet.

Note) When mixing top ported configurations, select from page 13. Specify on a manifold specification sheet if plugs are required on the A and B port on the manifold.

How to Order Valves (With two mounting screws)

Refer to the SY3000/5000 series catalog (CAT.NAS11-103) for details on valve specifications.

SY 3 1 0 0 □ □ □ □ – 5 □ □ 1 – □

❶ ❷ ❸ ❹ ❺ ❻ ❼ ❽ ❾ ❿ ⓫

● **Base mounted**

❶ Series

3	SY3000
5	SY5000

❷ Type of actuation

1	2-position single
2	2-position double
3	3-position closed center
4	3-position exhaust center
5	3-position pressure center
A∗	4-position dual 3-port valve (N.C./N.C.)
B∗	4-position dual 3-port valve (N.O./N.O.)
C∗	4-position dual 3-port valve (N.C./N.O.)

∗ Only rubber seal type is available for the 4-position dual 3-port valve.

❸ Seal type

0	Rubber seal
1	Metal seal

❹ Pilot type

Nil	Internal pilot
R	External pilot

❺ Back pressure check valve (Built-in valve type)

Nil	None
H	Built-in

∗ Only rubber seal type.
Manifold installed type is available if the back pressure check valve is required for a valve with metal seal. Refer to the SY3000/5000 series catalog (CAT.NAS11-103) for details. However, it is not recommended to use the built-in valve type and the manifold installed type at the same time because it will reduce the flow.
∗ The built-in valve type back pressure check valve is not available for the 3-position type.

❻ Pilot valve option

Nil	Standard (0.7 MPa)
B	Quick response type (0.7 MPa)
K∗	High pressure type (1.0 MPa)

∗ Only metal seal type is available for the high pressure type.

❼ Coil type

Nil	Standard
T	With power saving circuit (Continuous duty type)

∗ Be sure to select the power saving circuit type when a valve is continuously energized for long periods of time.
∗ Note the specified energizing time when power saving circuit is selected.

❽ Rated voltage

5	24 VDC

❾ Light/surge voltage suppressor and common specification

R	With surge voltage suppressor (Non-polar)
U	With light/surge voltage suppressor (Non-polar)
S	With surge voltage suppressor (Positive common)
Z	With light/surge voltage suppressor (Positive common)
NS	With surge voltage suppressor (Negative common)
NZ	With light/surge voltage suppressor (Negative common)

∗ Only "Z" and "NZ" types are available for the product with power saving circuit. Select a valve from R, U, S or Z when the SI unit output polarity is Nil (Positive common).
Select a valve from R, U, NS or NZ when the SI unit output polarity is N (Negative common).

❿ Manual override

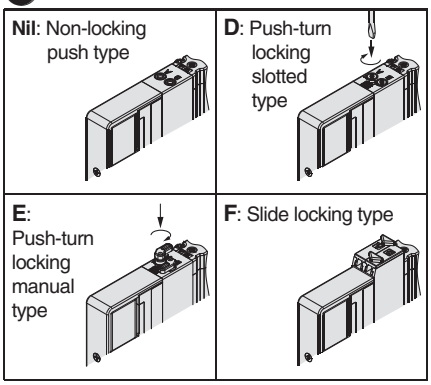

⓫ Type of mounting screw

Nil	Round head combination screw
B	Hexagon socket head cap screw
K	Round head combination screw (Falling-out-prevention type)
H	Hexagon socket head cap screw (Falling-out-prevention type)

∗ For "K" and "H", the valve body cover has a drop prevention construction to stop the mounting screws from falling out when the valve is removed for maintenance etc.
∗ When ordering a valve individually, the base gasket is not included. Since the base gasket is attached to the manifold, please order the base gasket separately if it is needed for maintenance service. Refer to the SY3000/5000 series catalog (CAT.NAS11-103) for part numbers of the base gasket and mounting screw.
∗ "B" and "H" cannot be selected for the individual SUP/EXH spacer assembly or double check spacer assembly with residual pressure release valve.

Refer to the SMC website or the SY3000/5000 series catalog (CAT.NAS11-103) for details on solenoid valve specifications, Common Precautions and Specific Product Precautions.

⚠ Protective class class Ⅲ(Mark: ⊕)

Dimensions: Type 10/For EX260/Series SY3000

(mm)

SS5Y3-10S□□- Stations U/D/B (S, R) - C2/C3, N1/C4, N3/C6, N7 (D)

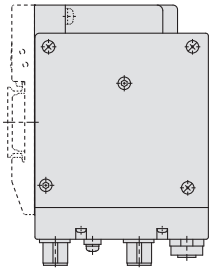

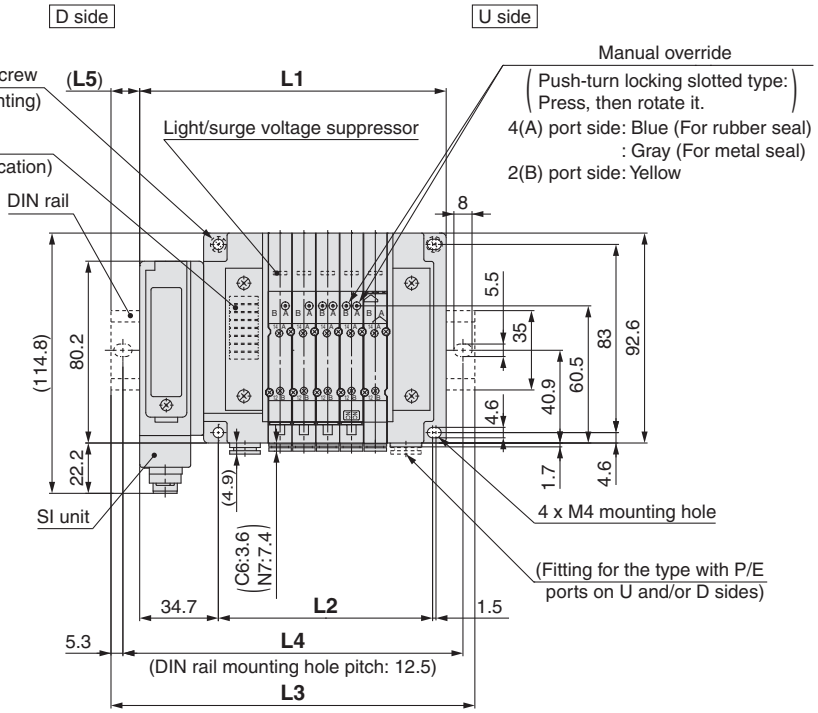

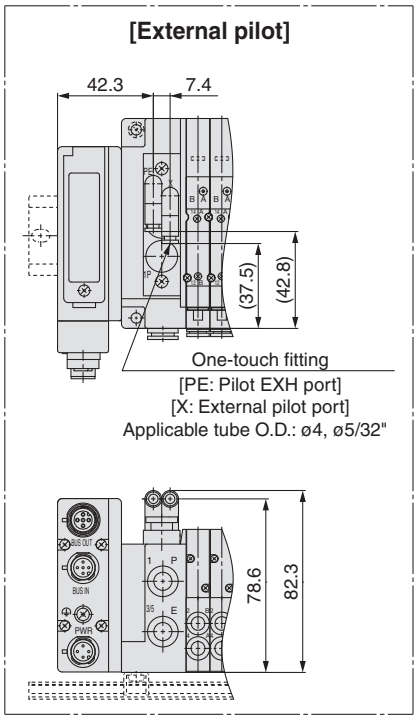

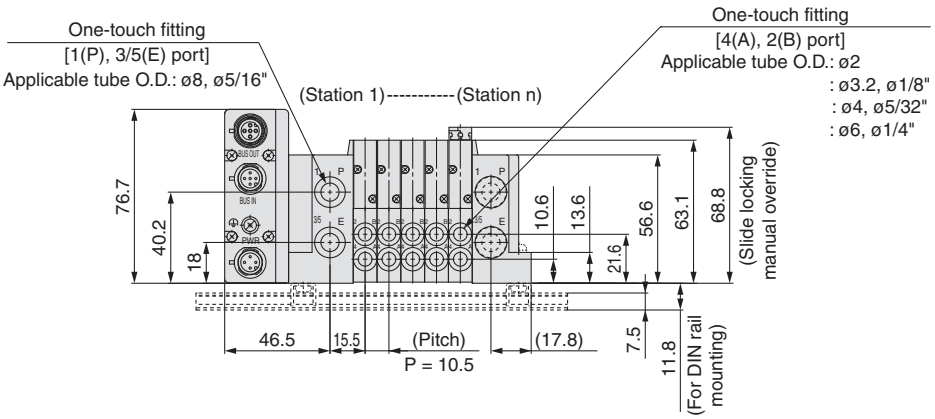

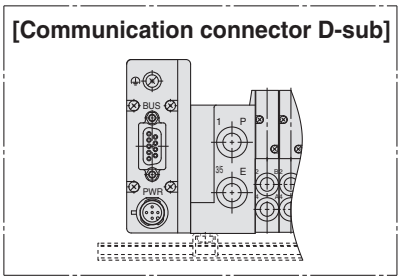

Note) These figures show the “SS5Y3-10SQA-05D-C6”.

n: stations	2	3	4	5	6	7	8	9	10	11	12	13	14	15	16	17	18	19	20	21	22	23	24
L1	103.7	114.2	124.7	135.2	145.7	156.2	166.7	177.2	187.7	198.2	208.7	219.2	229.7	240.2	250.7	261.2	271.7	282.2	292.7	303.2	313.7	324.2	334.7
L2	63	73.5	84	94.5	105	115.5	126	136.5	147	157.5	168	178.5	189	199.5	210	220.5	231	241.5	252	262.5	273	283.5	294
L3	135.5	148	148	160.5	173	185.5	198	210.5	223	223	235.5	248	260.5	273	285.5	285.5	298	310.5	323	335.5	348	348	360.5
L4	125	137.5	137.5	150	162.5	175	187.5	200	212.5	212.5	225	237.5	250	262.5	275	275	287.5	300	312.5	325	337.5	337.5	350
L5	16	17	11.5	12.5	13.5	14.5	15.5	16.5	17.5	12.5	13.5	14.5	15.5	16.5	17.5	12	13	14	15	16	17	12	13

Dimensions: Type 10/For EX260/Series SY5000

(mm)

SS5Y5-10S□□-Stations U/D/B (S, R) - C4, N3/C6, N7/C8, N9 (D)

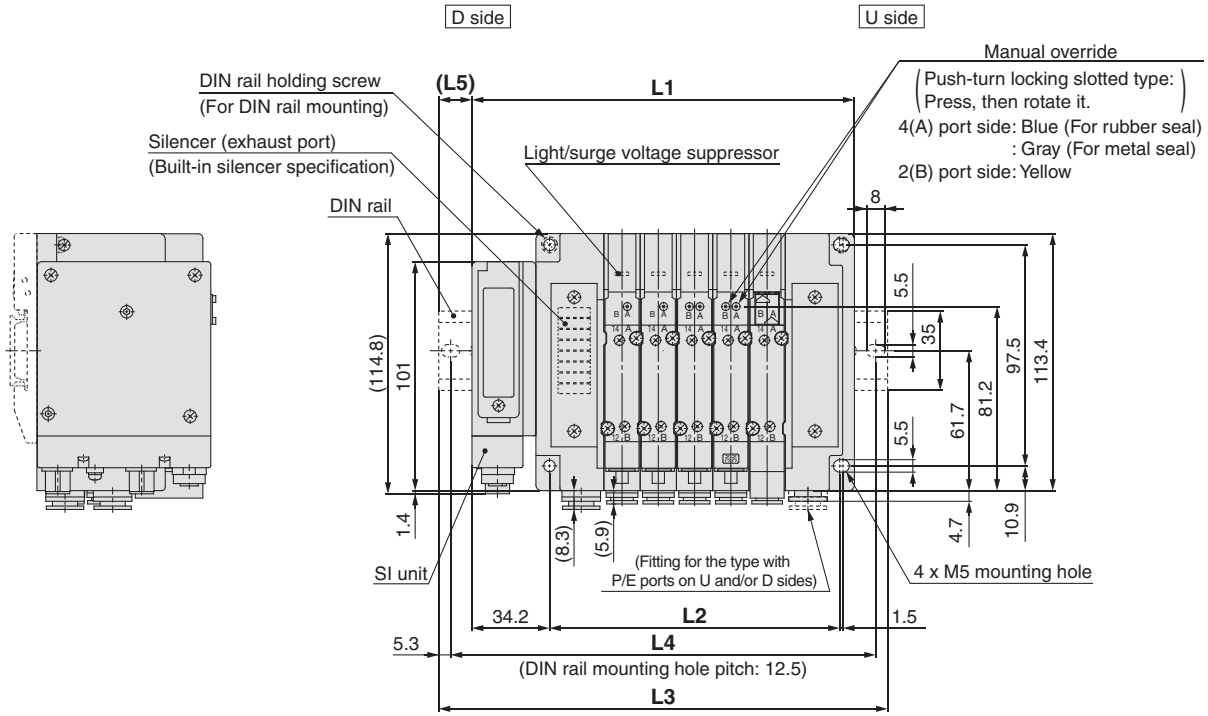

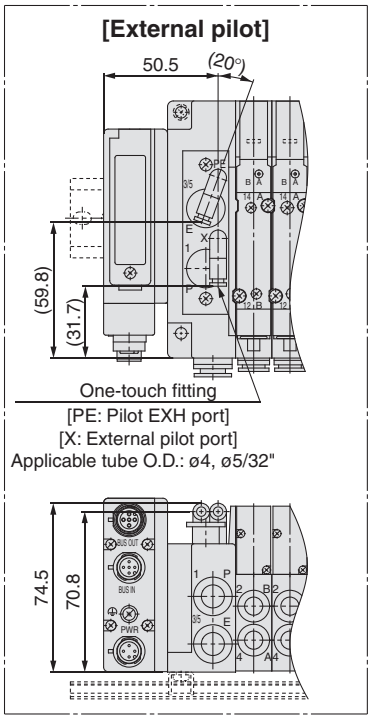

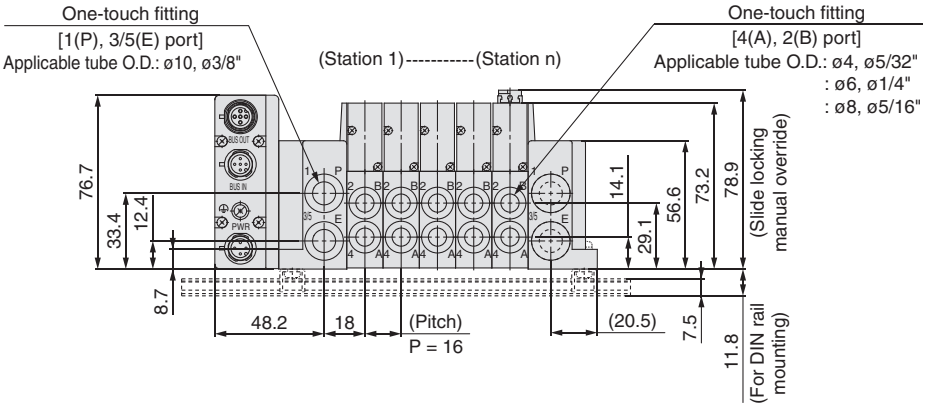

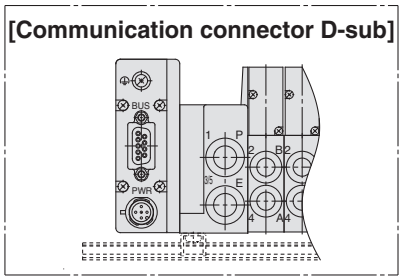

Note) These figures show the "SS5Y5-10SQA-05D-C8".

n: Station	2	3	4	5	6	7	8	9	10	11	12	13	14	15	16	17	18	19	20	21	22	23	24
L1	120.7	136.7	152.7	168.7	184.7	200.7	216.7	232.7	248.7	264.7	280.7	296.7	312.7	328.7	344.7	360.7	376.7	392.7	408.7	424.7	440.7	456.7	472.7
L2	80	96	112	128	144	160	176	192	208	224	240	256	272	288	304	320	336	352	368	384	400	416	432
L3	148	160.5	185.5	198	210.5	235.5	248	260.5	273	298	310.5	323	348	360.5	373	385.5	410.5	423	435.5	448	473	485.5	498
L4	137.5	150	175	187.5	200	225	237.5	250	262.5	287.5	300	312.5	337.5	350	362.5	375	400	412.5	425	437.5	462.5	475	487.5
L5	13.5	12	16.5	14.5	13	17.5	15.5	14	12	16.5	15	13	17.5	16	14	12.5	17	15	13.5	11.5	16	14.5	12.5

Dimensions: Type 11/For EX260/Series SY5000

(mm)

SS5Y5-11S□□- Stations U/D/B (S, R) - C4, N3 / C6, N7 / C8, N9

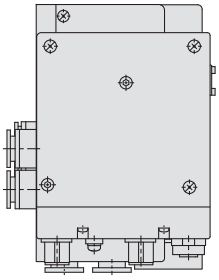

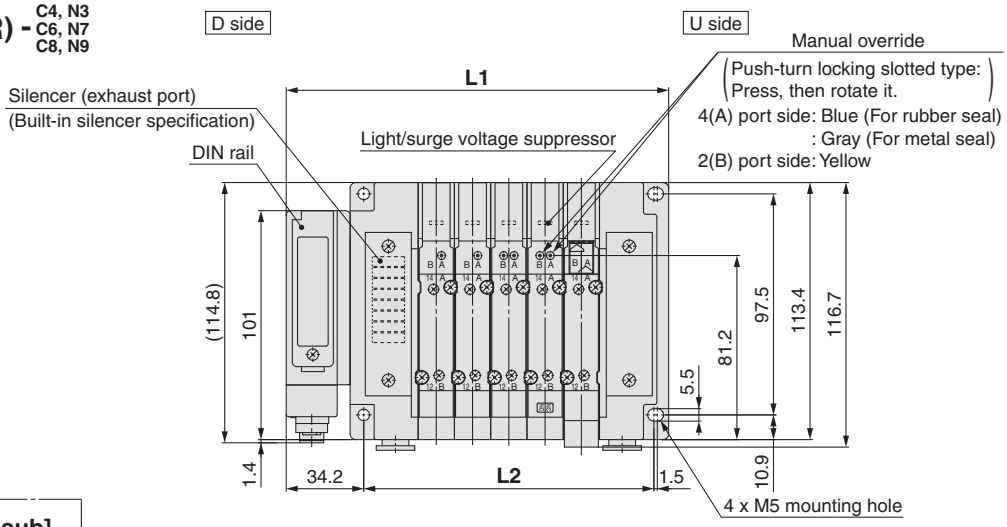

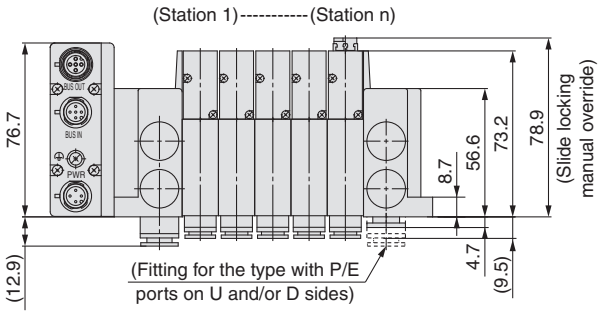

[Communication connector D-sub]

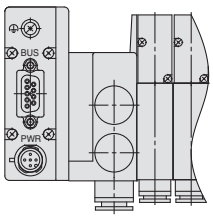

[External pilot]

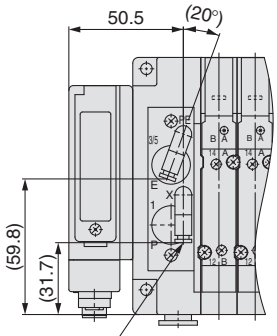

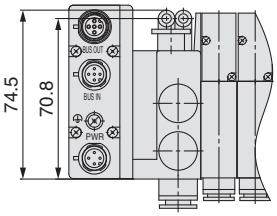

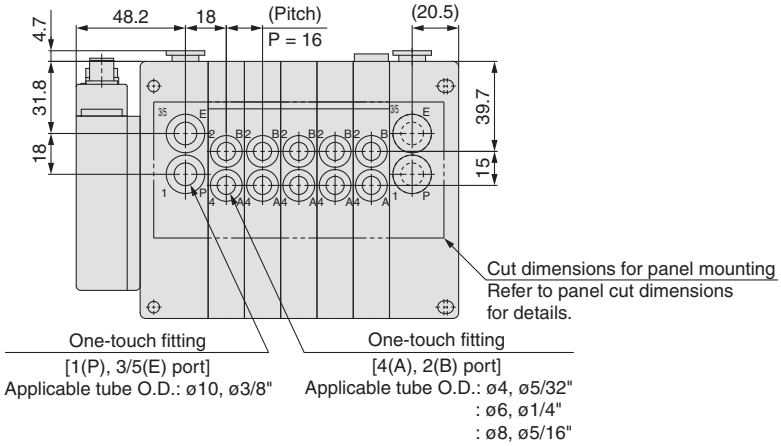

Panel cut dimensions

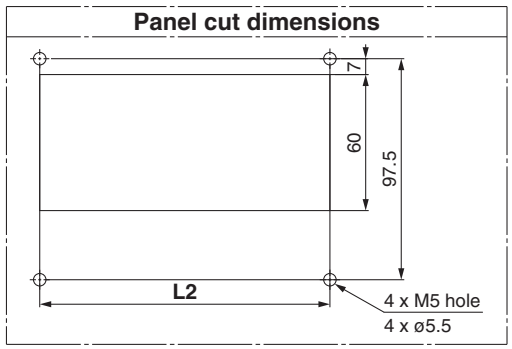

Note) These figures show the "SS5Y5-11SQA-05D-C8".

n: Stations	2	3	4	5	6	7	8	9	10	11	12	13	14	15	16	17	18	19	20	21	22	23	24
L1	120.7	136.7	152.7	168.7	184.7	200.7	216.7	232.7	248.7	264.7	280.7	296.7	312.7	328.7	344.7	360.7	376.7	392.7	408.7	424.7	440.7	456.7	472.7
L2	80	96	112	128	144	160	176	192	208	224	240	256	272	288	304	320	336	352	368	384	400	416	432

Type 12
Top Ported

Plug-in Connector Connecting Base: For EX260 Integrated-type (For Output) Serial Transmission System

Series SY3000/5000

CE RoHS

How to Order Manifold

Refer to pages 15, 16 for Type 12/Top ported dimensions.

SS5Y 3 – 12S NA N – 05 U ☐ – ☐ ☐

❶ ❷ ❸ ❹ ❺ ❻ ❼ ❽

❶ Series

3	SY3000
5	SY5000

❷ SI unit specifications

Symbol	Protocol	Number of outputs	Communication connector
0	Without SI unit		
QA	DeviceNet™	32	M12
QB		16	
NA	PROFIBUS DP	32	M12
NB		16	
NC		32	D-sub Note)
ND		16	
VA	CC-Link	32	M12
VB		16	
DA	EtherCAT	32	M12
DB		16	
FA	PROFINET	32	M12
FB		16	
EA	EtherNet/IP™	32	M12
EB		16	

Note) IP40 for the D-sub applicable communication connector specification.
For SI unit part number, refer to page 1.
DIN rail and SI unit output polarity "N" cannot be selected for the product without SI unit.

❸ SI unit output polarity

Nil	Positive common
N	Negative common

Note 1) Ensure a match with the common specifications of the valve to be used.
Note 2) Without SI unit, the symbol is nil.

❹ Valve stations

In the case of the 32-output SI unit

Symbol	Stations	Note
02	2 stations	Double wiring Note 1)
⋮	⋮	
16	16 stations	
02	2 stations	Specified layout Note 2) (Available up to 32 solenoids)
⋮	⋮	
24	24 stations	

In the case of the 16-output SI unit

Symbol	Stations	Note
02	2 stations	Double wiring Note 1)
⋮	⋮	
08	8 stations	
02	2 stations	Specified layout Note 2) (Available up to 16 solenoids)
⋮	⋮	
16	16 stations	

Note 1) Double wiring: 2-position single, double, 3-position and 4-position valves can be used on all manifold stations.
Use of a 2-position single solenoid will result in an unused control signal. If this is not desired, order with a specified layout.
Note 2) Specified layout: Indicate the wiring specifications on the manifold specification sheet.
(Note that 2-position double, 3-position and 4-position valves cannot be used where single wiring has been specified.)
Note 3) Includes the number of blanking plate assemblies.
Note 4) For the model without the SI unit (S0), note the maximum number of solenoids of the SI unit that will be mounted. If the layout is specified, indicate it on the manifold specification sheet.

❺ P, E port entry

U Note)	U side (2 to 10 stations)
D Note)	D side (2 to 10 stations)
B	Both sides (2 to 24 stations)

Note) ❻ For type "S", supply/exhaust block assembly with built-in silencer, choose U or D for P port entry.

❻ SUP/EXH block assembly

Nil	Internal pilot
S	Internal pilot, Built-in silencer
R	External pilot

∗ For built-in silencer type, P and E ports are available on U and D sides. 3/5(E) port is plugged. The silencer exhaust port is located on the opposite side of P, E port entry. (Example: When the P, E port entry is D side, the silencer exhaust port is U side.)
∗ When the built-in silencer type is used, keep the exhaust port from coming in direct contact with water or other liquids.

❼ P, E port size (One-touch fittings)

Symbol	SY3000	SY5000
Nil	ø8	ø10
N	ø5/16"	ø3/8"

∗ For N, sizes are in inches.

❽ Mounting

Nil	Direct mounting	
D	DIN rail mounting (With DIN rail)	
D0	DIN rail mounting (Without DIN rail)	
D3	For 3 stations	Specify a longer rail than the standard length.
⋮	⋮	
D24	For 24 stations	

∗ When it is necessary to mount a DIN rail without an SI unit, select D0 and order DIN rail length separately, referring to L3 in the dimensions. Refer to the SY3000/5000 series catalog (CAT.NAS11-103) for part numbers of DIN rail.

How to Order Manifold Assembly

Example (SS5Y3-12SNAN-□)

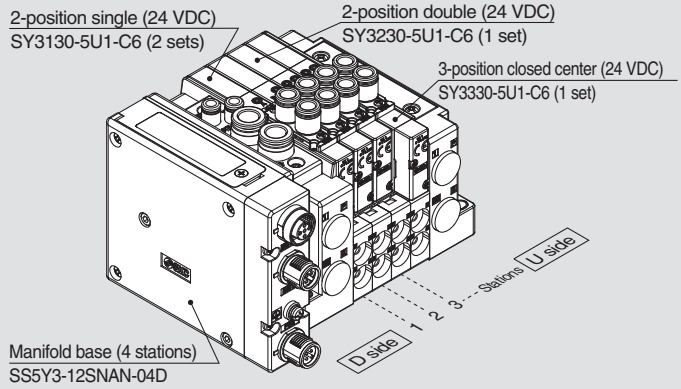

SS5Y3-12SNAN-04D ····· **1 set (Type 12 4-station manifold base part no.)**
∗SY3130-5U1-C6 ····· **2 sets (2-position single part no.)**
∗SY3230-5U1-C6 ····· **1 set (2-position double part no.)**
∗SY3330-5U1-C6 ····· **1 set (3-position closed center part no.)**
∗ The asterisk denotes the symbol for assembly.
∗ Prefix it to the part nos. of the valve, etc.

- The valve arrangement is numbered as the 1st station from the D side.
- Under the manifold part number, state the valves to be mounted in order from the 1st station as shown in the figure above.
  If the arrangement becomes complicated, specify on a manifold specification sheet.

How to Order Valves (With two mounting screws)

Refer to the SY3000/5000 series catalog (CAT.NAS11-103) for details on valve specifications.

SY 3 1 3 0 □ □ □ □ – 5 □ □ 1 – C6 □ – □

❶ ❷ ❸ ❹ ❺ ❻ ❼ ❽ ❾ ❿ ⓫ ⓬ ⓭

• Top ported

❶ Series

3	SY3000
5	SY5000

❷ Type of actuation

1	2-position single
2	2-position double
3	3-position closed center
4	3-position exhaust center
5	3-position pressure center
A∗	4-position dual 3-port valve (N.C./N.C.)
B∗	4-position dual 3-port valve (N.O./N.O.)
C∗	4-position dual 3-port valve (N.C./N.O.)

∗ Only rubber seal type is available for the 4-position dual 3-port valve.

❸ Seal type

0	Rubber seal
1	Metal seal

❹ Pilot type

Nil	Internal pilot
R	External pilot

❺ Back pressure check valve (Built-in valve type)

Nil	None
H	Built-in

∗ Only rubber seal type.
Manifold installed type is available if the back pressure check valve is required for a valve with metal seal. Refer to the SY3000/5000 series catalog (CAT. NAS11-103) for details. However, it is not recommended to use the built-in valve type and the manifold installed type at the same time because it will reduce the flow.
∗ The built-in valve type back pressure check valve is not available for the 3-position type.

Refer to the SMC website or the SY3000/5000 series catalog (CAT.NAS11-103) for details on solenoid valve specifications, Common Precautions and Specific Product Precautions.

❻ Pilot valve option

Nil	Standard (101 psi (0.7 MPa))
B	Quick response type (101 psi (0.7 MPa))
K∗	High pressure type (145psi (1.0 MPa))

∗ Only metal seal type is available for the high pressure type.

❼ Coil type

Nil	Standard
T	With power saving circuit (Continuous duty type)

∗ Be sure to select the power saving circuit type when a valve is continuously energized for long periods of time.
∗ Note the specified energizing time when power saving circuit is selected.

❽ Rated voltage

5	24 VDC

❾ Light/surge voltage suppressor and common specification

R	With surge voltage suppressor (Non-polar)
U	With light/surge voltage suppressor (Non-polar)
S	With surge voltage suppressor (Positive common)
Z	With light/surge voltage suppressor (Positive common)
NS	With surge voltage suppressor (Negative common)
NZ	With light/surge voltage suppressor (Negative common)

∗ Only "Z" and "NZ" types are available for the product with power saving circuit. Select a valve from R, U, S or Z when the SI unit output polarity is Nil (Positive common).
Select a valve from R, U, NS or NZ when the SI unit output polarity is N (Negative common).

❿ Manual override

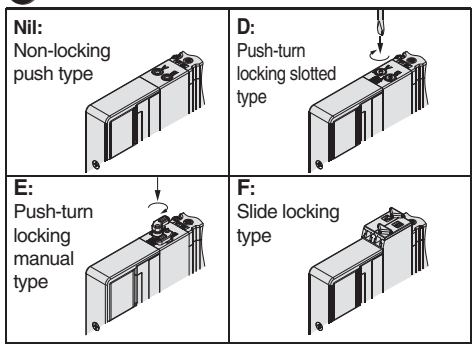

⓫ A, B port size

Thread piping

Symbol	Port size	Applicable series
M5	M5 x 0.8	SY3000
01	1/8	SY5000

One-touch fitting (Metric)

Symbol	A and B port	SY3000	SY5000
C2	ø2 One-touch fitting	●	—
C3	ø3.2 One-touch fitting	●	—
C4	ø4 One-touch fitting	●	●
C6	ø6 One-touch fitting	●	●
C8	ø8 One-touch fitting	—	●

One-touch fitting (Inch)

Symbol	A and B port	SY3000	SY5000
N1	ø1/8" One-touch fitting	●	—
N3	ø5/32" One-touch fitting	●	●
N7	ø1/4" One-touch fitting	●	●
N9	ø5/16" One-touch fitting	—	●

⓬ Thread type

Nil	Rc
F	G
N	NPT
T	NPTF

∗ Only Nil is available for M5.

⓭ Type of mounting screw

Nil	Round head combination screw
B	Hexagon socket head cap screw
K	Round head combination screw(Falling-out-prevention type)
H	Hexagon socket head cap screw(Falling-out-prevention type)

∗ For "K" and "H", the valve body cover has a drop prevention construction to stop the mounting screws from falling out when the valve is removed for maintenance etc.
∗ When ordering a valve individually, the base gasket is not included. Since the base gasket is attached to the manifold, please order the base gasket separately if it is needed for maintenance service. Refer to the SY3000/5000 series catalog (CAT.NAS11-103) for part numbers of the base gasket and mounting screw.
∗ "B" and "H" cannot be selected for the individual SUP/EXH spacer assembly.

⚠ Protective class class Ⅲ(Mark: ⊘)

Dimensions: Type 12/For EX260/Series SY3000

(mm)

SS5Y3-12S□□- Stations U/D/B (S, R) (-D)

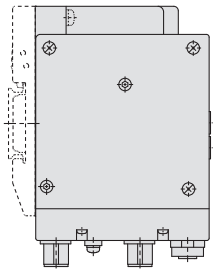

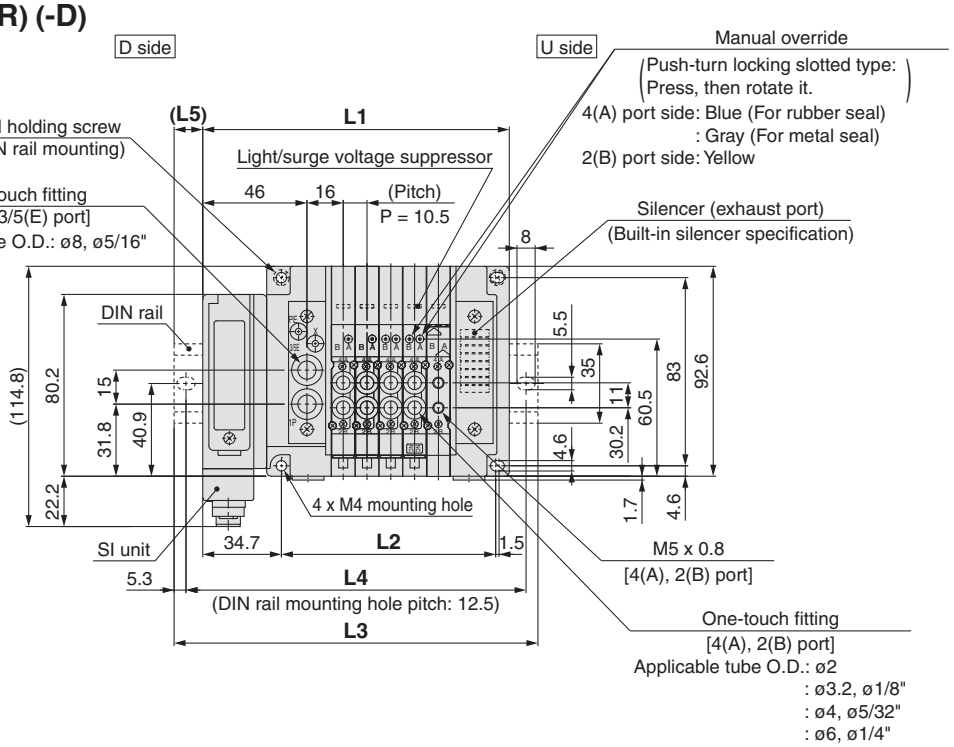

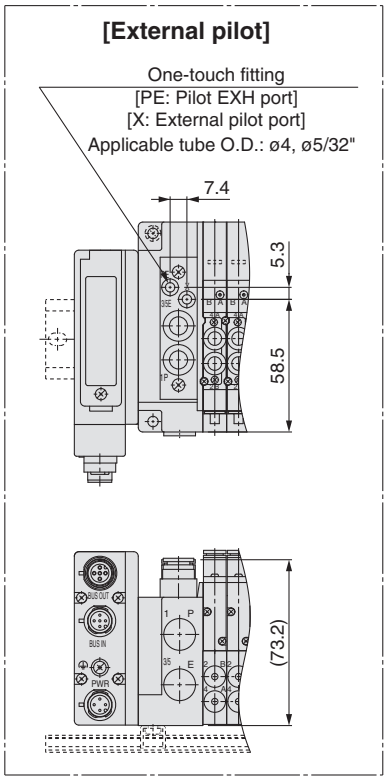

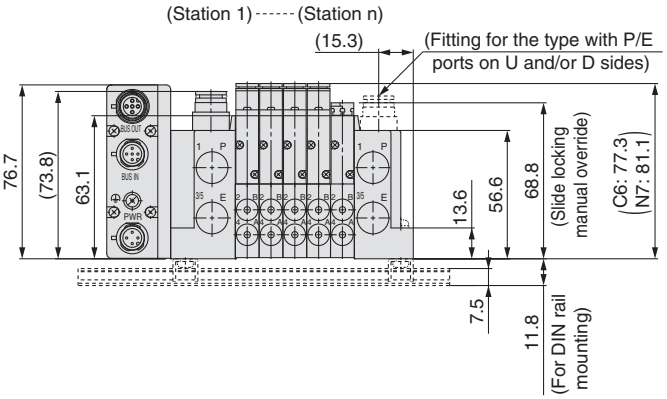

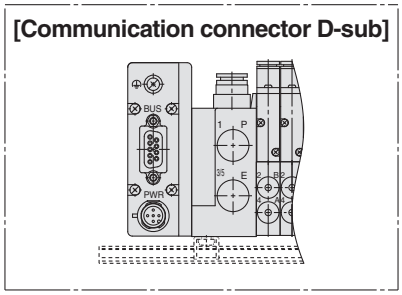

Note 1) These figures show the "SS5Y3-12SQA-05D".
Note 2) For built-in silencer type, a silencer is mounted on the opposite side of U or D side with P or E port.

n:Stations	2	3	4	5	6	7	8	9	10	11	12	13	14	15	16	17	18	19	20	21	22	23	24
L1	103.7	114.2	124.7	135.2	145.7	156.2	166.7	177.2	187.7	198.2	208.7	219.2	229.7	240.2	250.7	261.2	271.7	282.2	292.7	303.2	313.7	324.2	334.7
L2	63	73.5	84	94.5	105	115.5	126	136.5	147	157.5	168	178.5	189	199.5	210	220.5	231	241.5	252	262.5	273	283.5	294
L3	135.5	148	148	160.5	173	185.5	198	210.5	223	223	235.5	248	260.5	273	285.5	285.5	298	310.5	323	335.5	348	348	360.5
L4	125	137.5	137.5	150	162.5	175	187.5	200	212.5	212.5	225	237.5	250	262.5	275	275	287.5	300	312.5	325	337.5	337.5	350
L5	16	17	11.5	12.5	13.5	14.5	15.5	16.5	17.5	12.5	13.5	14.5	15.5	16.5	17.5	12	13	14	15	16	17	12	13

Dimensions: Type 12/For EX260/Series SY5000

(mm)

SS5Y5-12S□□- Stations U/D/B (S, R) (-D)

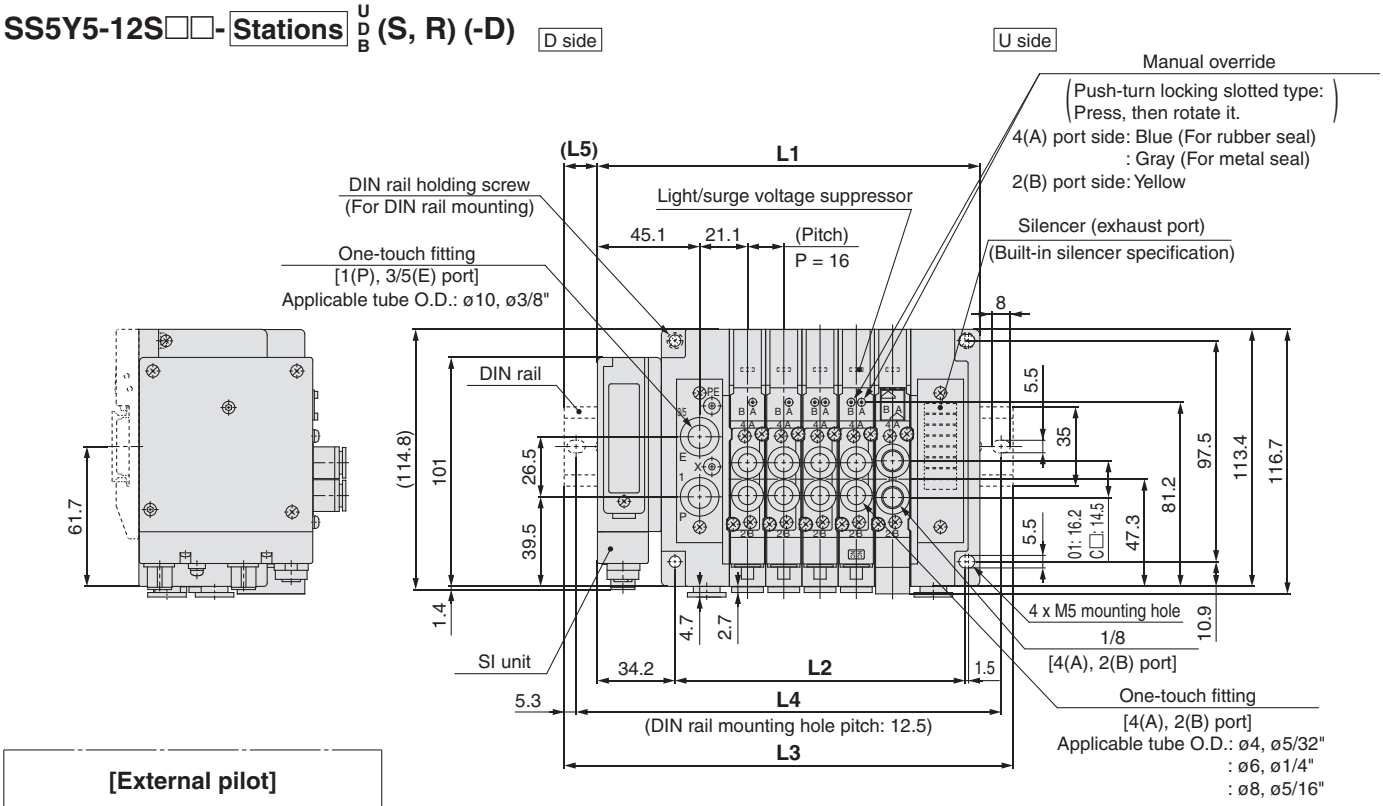

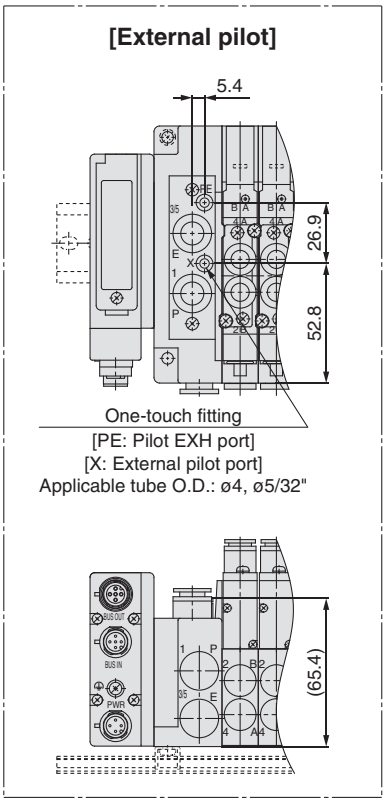

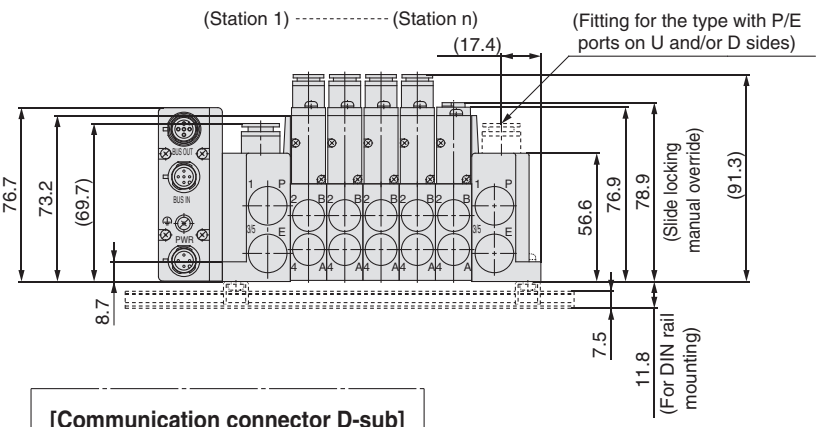

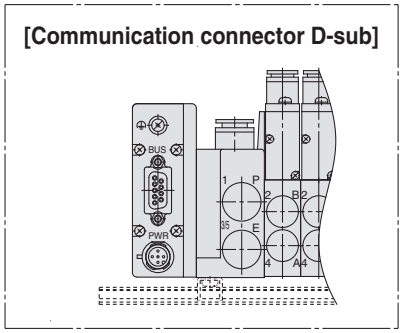

Note 1) These figures show the "SS5Y5-12SQA-05D".
Note 2) For built-in silencer type, a silencer is mounted on the opposite side of U or D side with P or E port.

n:Stations	2	3	4	5	6	7	8	9	10	11	12	13	14	15	16	17	18	19	20	21	22	23	24
L1	120.7	136.7	152.7	168.7	184.7	200.7	216.7	232.7	248.7	264.7	280.7	296.7	312.7	328.7	344.7	360.7	376.7	392.7	408.7	424.7	440.7	456.7	472.7
L2	80	96	112	128	144	160	176	192	208	224	240	256	272	288	304	320	336	352	368	384	400	416	432
L3	148	160.5	185.5	198	210.5	235.5	248	260.5	273	298	310.5	323	348	360.5	373	385.5	410.5	423	435.5	448	473	485.5	498
L4	137.5	150	175	187.5	200	225	237.5	250	262.5	287.5	300	312.5	337.5	350	362.5	375	400	412.5	425	437.5	462.5	475	487.5
L5	13.5	12	16.5	14.5	13	17.5	15.5	14	12	16.5	15	13	17.5	16	14	12.5	17	15	13.5	11.5	16	14.5	12.5

Type 10
Side Ported

Type 11
Bottom Ported

Plug-in Connector Connecting Base: Plug-in Mixed Mounting Type Manifold For EX260 Integrated-type (For Output) Serial Transmission System

Series SY3000/5000

CE RoHS

SY3000 can be mounted onto SY5000 size manifold.

How to Order Manifold

Refer to page 20 for Type 11/ Bottom ported dimensions.

SS5Y5 – M 10 S NA N – 05 U □ – C 8 6 □

❶ ❷ ❸ ❹ ❺ ❻ ❼ ❽ ❾ ❿

Mixed Mounting Type

It is possible to mount SY3000 size valves on all stations. In this case, there is no need to fill in part ❽ in the order code. However, the manifold block width should be 12.5 mm.

❶ Type

10	Side ported
11	Bottom ported

❷ SI unit specifications

Symbol	Protocol	Number of outputs	Communication connector
0	Without SI unit		
QA	DeviceNet™	32	M12
QB		16	
NA	PROFIBUS DP	32	M12
NB		16	
NC		32	D-sub Note)
ND		16	
VA	CC-Link	32	M12
VB		16	
DA	EtherCAT	32	M12
DB		16	
FA	PROFINET	32	M12
FB		16	
EA	EtherNet/IP™	32	M12
EB		16	

Note) IP40 for the D-sub applicable communication connector specification.
For SI unit part number, refer to page 1.
DIN rail and SI unit output polarity "N" cannot be selected for the product without SI unit.

❸ SI unit output polarity

Nil	Positive common
N	Negative common

Note 1) Ensure a match with the common specifications of the valve to be used.
Note 2) Without SI unit, the symbol is nil.

❹ Valve stations

In the case of the 32-output SI unit

Symbol	Stations	Note
02	2 stations	Double wiring Note 1)
⋮	⋮	
16	16 stations	
02	2 stations	Specified layout Note 2) (Available up to 32 solenoids)
⋮	⋮	
24	24 stations	

In the case of the 16-output SI unit

Symbol	Stations	Note
02	2 stations	Double wiring Note 1)
⋮	⋮	
08	8 stations	
02	2 stations	Specified layout Note 2) (Available up to 16 solenoids)
⋮	⋮	
16	16 stations	

Note 1) Double wiring: 2-position single, double, 3-position and 4-position valves can be used on all manifold stations.
Use of a 2-position single solenoid will result in an unused control signal. If this is not desired, order with a specified layout.
Note 2) Specified layout: Indicate the wiring specifications on the manifold specification sheet.
(Note that 2-position double, 3-position and 4-position valves cannot be used where single wiring has been specified.)
Note 3) Includes the number of blanking plate assemblies.
Note 4) For the model without the SI unit (S0), note the maximum number of solenoids of the SI unit that will be mounted. If the layout is specified, indicate it on the manifold specification sheet.

How to Order Manifold Assembly

Example (SS5Y5-M10SNAN-□)

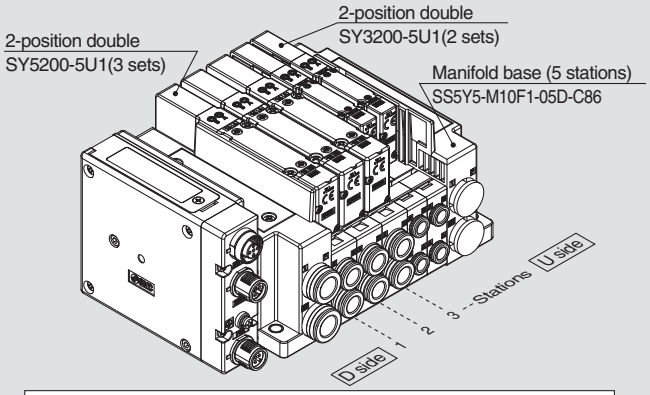

SS5Y5-M10F1-05D-C86 ···1 set (Type 10 5-station manifold base part no.)
∗SY5200-5U1 ·····3 sets (2-position double part no.)
∗SY3200-5U1 ·····2 sets (2-position double part no.)
∗The asterisk denotes the symbol for assembly.
∗Prefix it to the part nos. of the valve, etc.

- The valve arrangement is numbered as the 1st station from the D side.
- Under the manifold part number, state the valves to be mounted in order from the 1st station as shown in the figure above.
  If the arrangement becomes complicated, then indicate on the manifold specification sheet.

Note) When mounting top ported valves, select from page 21. In this case, use caution as there is also output on the A and B port on base side.
Specify on a manifold specification sheet if plugs are required on the A and B port on base side.

❺ P, E port entry

U	U side (2 to 10 stations)
D	D side (2 to 10 stations)
B	Both sides (2 to 24 stations)

❻ SUP/EXH block assembly

Nil	Internal pilot
S	Internal pilot, Built-in silencer
R	External pilot

∗ 3/5(E) port is plugged for the built-in silencer type.
∗ When the built-in silencer type is used, keep the exhaust port from coming in direct contact with water or other liquids.

Refer to the page on the right for ❼,❽,❾

❿ Mounting and Option

Symbol	Mounting	Option
Nil	Direct mounting	None
AA		Name plate (With station number)
BA		Name plate (Without station number)
D□	DIN rail mounting	Without name plate
A□		Name plate (With station number)
B□		Name plate (Without station number)

Note 1) Enter the number of stations inside □.
(Refer to "DIN Rail Option" below.)
Note 2) Only direct mounting is available for Type 11 (Bottom ported).

DIN Rail Option

Nil	Standard length	
0	Without DIN rail (with bracket)	
3	For 3 stations	Specify a longer rail than the total length of specified stations. [The SY5000 valve is now at a mountable length (manifold block length of 16 mm).]
⋮	⋮	
24	For 24 stations	

∗ When it is necessary to mount a DIN rail without an SI unit, select D0 and calculate DIN rail length, referring to L3 in the dimensions on page 19.

❼ Fitting type

Symbol	A, B port
C	Metric size: Straight one-touch fitting
L	Metric size: Elbow one-touch fitting for upward Note)
B	Metric size: Elbow one-touch fitting for downward Note)
N	Inch size: Straight one-touch fitting
LN	Inch size: Elbow one-touch fitting for upward Note)
BN	Inch size: Elbow one-touch fitting for downward Note)
CM*	Straight port, mixed sizes
LM*	Elbow port, mixed sizes (Including upward and downward piping) Note)

Note) To avoid interference with the body or piping, select downward elbow port when mounting the optional spacer assembly.
* Indicate the sizes on the manifold specification sheet in the case of "CM", "LM".
* The direction of P, E port fittings is the same as for A,B port.
If selecting "LM", indicate it on the manifold specification sheet for the P, E port fitting direction.
* Elbow fittings: ø2, ø3.2 and ø1.8" are not available for the SY3000 series. ø2, ø3.2, ø1.8" and ø5/32" are not available for the SY5000 series.

❽ SY5000: A, B port size

(Metric)

Symbol	Port size
4	ø4 One-touch fitting
6	ø6 One-touch fitting
8	ø8 One-touch fitting
Nil	For all stations of SY3000

(Inch)

Symbol	Port size
3	ø5/32" One-touch fitting
7	ø1/4" One-touch fitting
9	ø5/16" One-touch fitting
Nil	For all stations of SY3000

* No symbol needs to be specified when fitting type "CM", "LM" is selected.

❾ SY3000: A, B port size

(Metric)

Symbol	Port size
2	ø2 One-touch fitting
3	ø3.2 One-touch fitting
4	ø4 One-touch fitting
6	ø6 One-touch fitting

(Inch)

Symbol	Port size
1	ø1/8" One-touch fitting
3	ø5/32" One-touch fitting
7	ø1/4" One-touch fitting

* No symbol needs to be specified when fitting type "CM", "LM" is selected.

How to Order Valves (With two mounting screws)

Refer to the SY3000/5000 series catalog (CAT.NAS11-103) for details on valve specifications.

SY 3 1 0 0 □ □ □ □ – 5 □ □ 1 – □

❶ ❷ ❸ ❹ ❺ ❻ ❼ ❽ ❾ ❿ ⓫

● Base mounted

❶ Series

3	SY3000
5	SY5000

❷ Type of actuation

1	2-position single
2	2-position double
3	3-position closed center
4	3-position exhaust center
5	3-position pressure center
A*	4-position dual 3-port valve (N.C./N.C.)
B*	4-position dual 3-port valve (N.O./N.O.)
C*	4-position dual 3-port valve (N.C./N.O.)

* Only rubber seal type is available for the 4-position dual 3-port valve.

❸ Seal type

0	Rubber seal
1	Metal seal

❹ Pilot type

Nil	Internal pilot
R	External pilot

❺ Back pressure check valve (Built-in valve type)

Nil	None
H	Built-in

* Only rubber seal type.
Manifold installed type is available if the back pressure check valve is required for a valve with metal seal. Refer to the SY3000/5000 series catalog (CAT.NAS11-103) for details. However, it is not recommended to use the built-in valve type and the manifold installed type at the same time because it will reduce the flow.
* The built-in valve type back pressure check valve is not available for the 3-position type.

❻ Pilot valve option

Nil	Standard (101 psi (0.7 MPa))
B	Quick response type (101 psi (0.7 MPa))
K*	High pressure type (145 psi (1.0 MPa))

* Only metal seal type is available for the high pressure type.

❼ Coil type

Nil	Standard
T	With power saving circuit (Continuous duty type)

* Be sure to select the power saving circuit type when a valve is continuously energized for long periods of time.
* Note the specified energizing time when power saving circuit is selected.

❽ Rated voltage

5	24 VDC

❾ Light/surge voltage suppressor and common specification

Nil	Without light/surge voltage suppressor (Non-polar)
R	With surge voltage suppressor (Non-polar)
U	With light/surge voltage suppressor (Non-polar)
S	With surge voltage suppressor (Positive common)
Z	With light/surge voltage suppressor (Positive common)
NS	With surge voltage suppressor (Negative common)
NZ	With light/surge voltage suppressor (Negative common)

* Only "Z" and "NZ" types are available for the product with power saving circuit. Select a valve from R, U, S or Z when the SI unit output polarity is Nil (Positive common).
Select a valve from R, U, NS or NZ when the SI unit output polarity is N (Negative common).

❿ Manual override

Nil: Non-locking push type

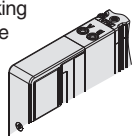

D: Push-turn locking slotted type

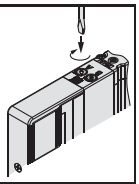

E: Push-turn locking manual type

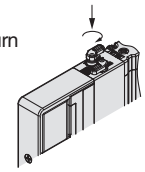

F: Slide locking type

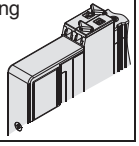

⓫ Type of mounting screw

Nil	Round head combination screw
B	Hexagon socket head cap screw
K	Round head combination screw (Falling-out-prevention type)
H	Hexagon socket head cap screw (Falling-out-prevention type)

* For "K" and "H", the valve body cover has a drop prevention construction to stop the mounting screws from falling out when the valve is removed for maintenance etc.
* When ordering a valve individually, the base gasket is not included. Since the base gasket is attached to the manifold, please order the base gasket separately if it is needed for maintenance service.
Refer to the SY3000/5000 series catalog (CAT.NAS11-103) for part numbers of the base gasket and mounting screw.
* "B" and "H" cannot be selected for the individual SUP/EXH spacer assembly or double check spacer assembly with residual pressure release valve.

Refer to the SMC website or the SY3000/5000 series catalog (CAT.NAS11-103) for details on solenoid valve specifications, Common Precautions and Specific Product Precautions.

Dimensions: Type 10/For EX260/Mixed Mounting Type

(mm)

SS5Y5-M10S□□-Stations U/D/B (-D)

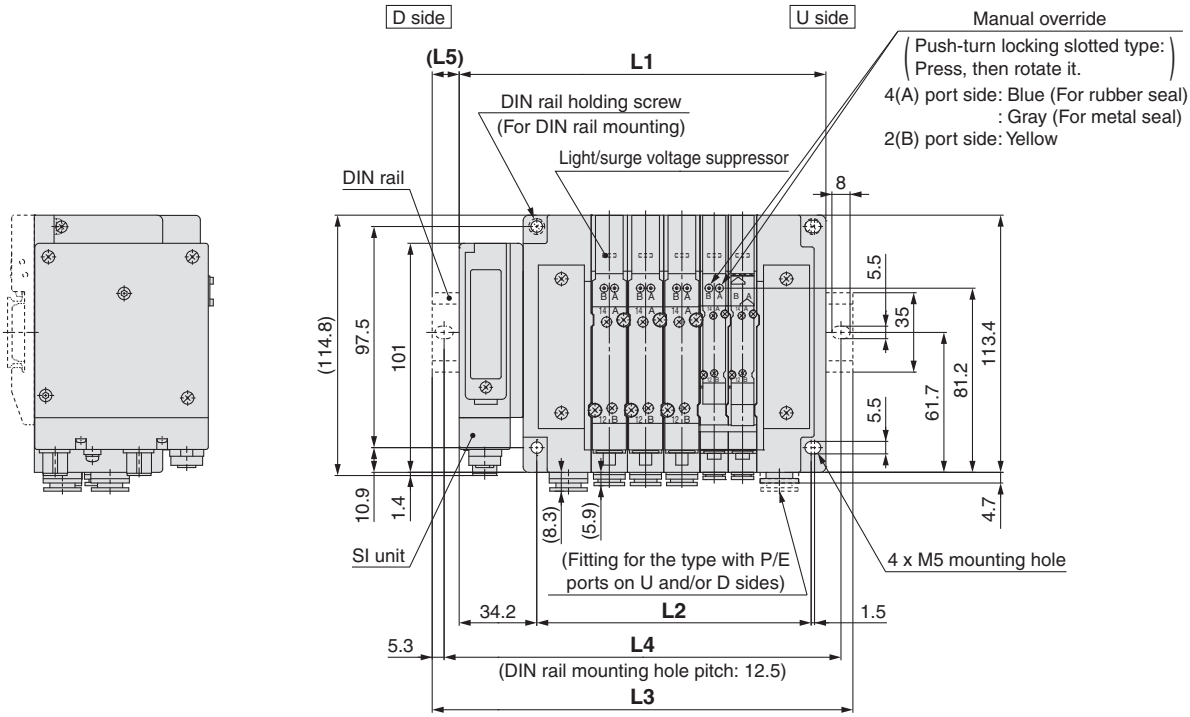

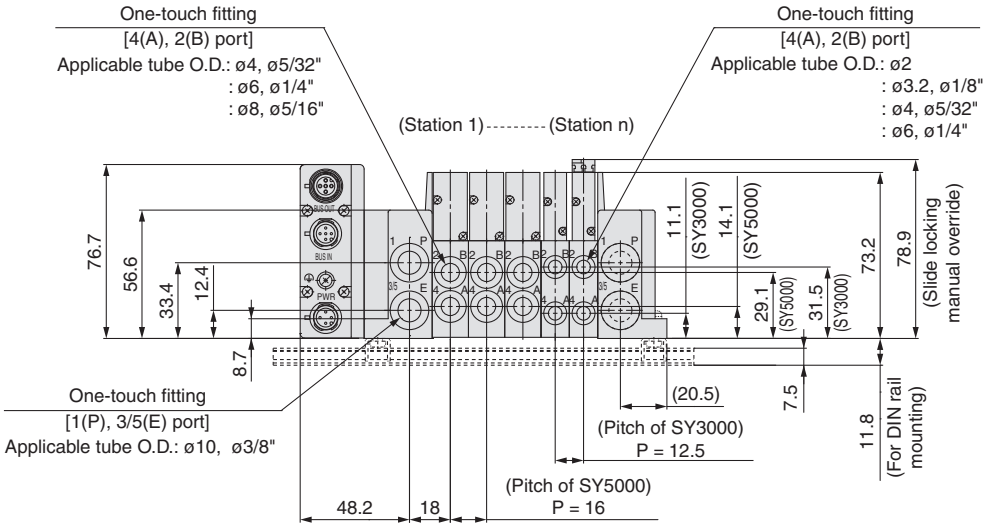

Note 1) These figures show the "SS5Y5-M10SQA-05D-C86".
Note 2) Refer to page 10 for dimensions of D-sub communication connector, external pilot and built-in silencer.

EX260 Serial transmission Calculation of dimensions

L1 = 12.5 x n1 + 16 x n2 + 88.7
L2 = 12.5 x n1 + 16 x n2 + 48
M = L1/12.5 + 1 Remove all numbers after the decimal
L3 = 12.5 x M + 23
L4 = L3 − 10.5
L5 = (L3 − L1)/2

n1: SY3000 Valve stations
n2: SY5000 Valve stations

Dimensions: Type 11/For EX260/Mixed Mounting Type

(mm)

SS5Y5-M11S□□- Stations U D B

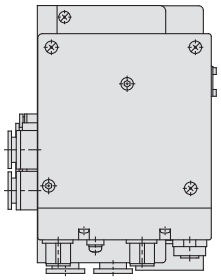

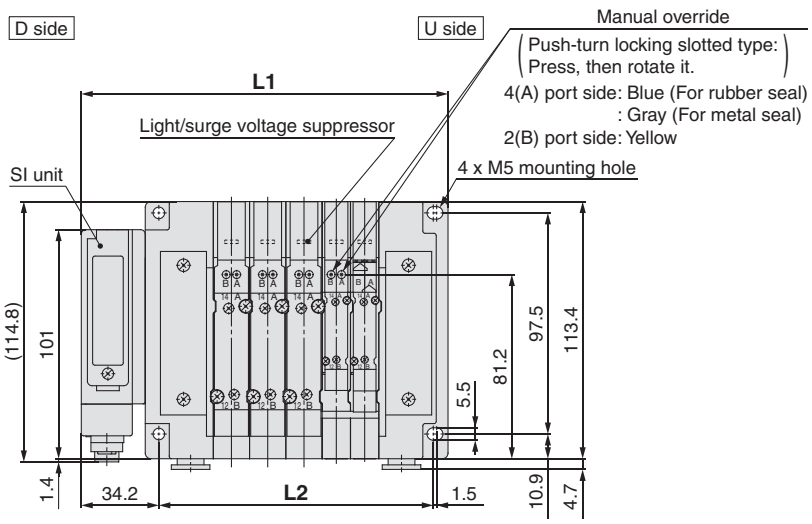

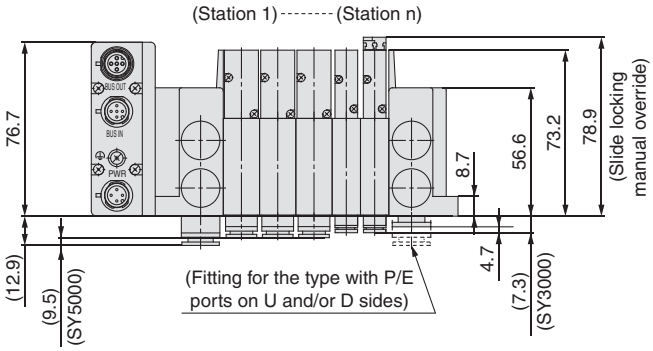

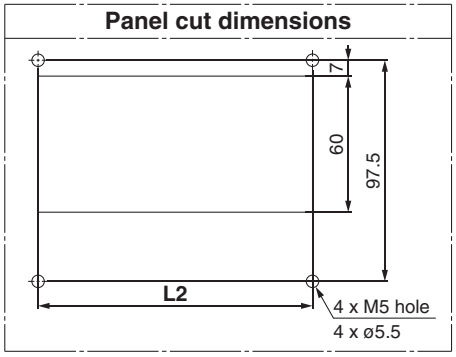

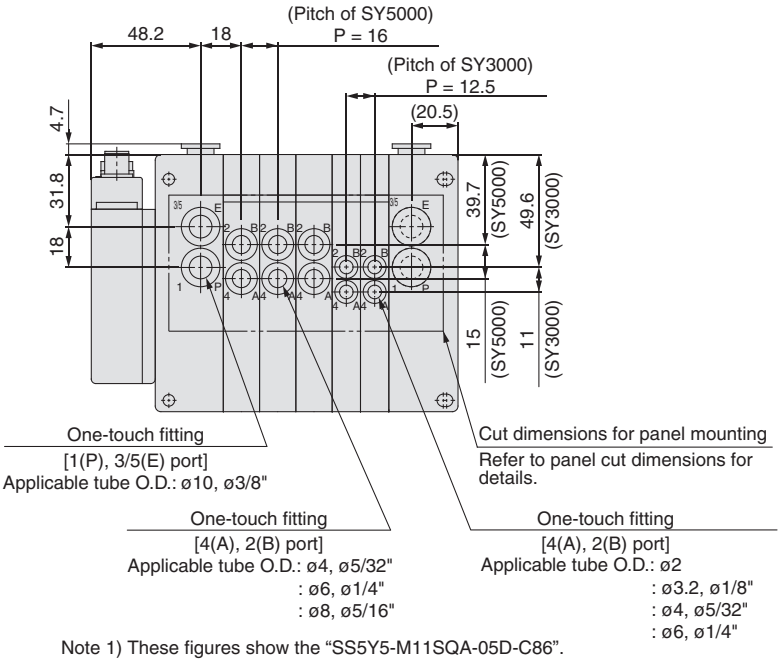

Note 1) These figures show the "SS5Y5-M11SQA-05D-C86".
Note 2) Refer to page 11 for dimensions of D-sub communication connector, external pilot and built-in silencer.

EX260 Serial transmission	Calculation of dimensions
L1 = 12.5 x n1 + 16 x n2 + 88.7	
L2 = 12.5 x n1 + 16 x n2 + 48	

n1: SY3000 Valve stations
n2: SY5000 Valve stations

Type 12
Top Ported

Plug-in Connector Connecting Base: Plug-in Mixed MountingType Manifold For EX260 Integrated-type (For Output) Serial Transmission System

Series SY3000/5000

CE
RoHS

SY3000 can be mounted onto SY5000 size manifold.

How to Order Manifold

Refer to page 23 for Type 12/ Top ported dimensions.

SS5Y5 – M 12S NA N – 05 U □ – □ □

❶ ❷ ❸ ❹ ❺ ❻ ❼

Mixed Mounting Type

It is possible to mount SY3000 size valves on all stations.
However, the manifold block width should be 12.5 mm.

❶ SI unit specifications

Symbol	Protocol	Number of outputs	Communication connector
0	Without SI unit		
QA	DeviceNet™	32	M12
QB		16	
NA	PROFIBUS DP	32	M12
NB		16	
NC		32	D-sub Note)
ND		16	
VA	CC-Link	32	M12
VB		16	
DA	EtherCAT	32	M12
DB		16	
FA	PROFINET	32	M12
FB		16	
EA	EtherNet/IP™	32	M12
EB		16	

Note) IP40 for the D-sub applicable communication connector specification.
For SI unit part number, refer to page 1.
DIN rail and SI unit output polarity "N" cannot be selected for the product without SI unit.

❷ SI unit output polarity

Nil	Positive common
N	Negative common

Note 1) Ensure a match with the common specifications of the valve to be used.
Note 2) Without SI unit, the symbol is nil.

❸ Valve stations

In the case of the 32-output SI unit

Symbol	Stations	Note
02	2 stations	Double wiring Note 1)
⋮	⋮	
16	16 stations	
02	2 stations	Specified layout Note 2) (Available up to 32 solenoids)
⋮	⋮	
24	24 stations	

In the case of the 16-output SI unit

Symbol	Stations	Note
02	2 stations	Double wiring Note 1)
⋮	⋮	
08	8 stations	
02	2 stations	Specified layout Note 2) (Available up to 16 solenoids)
⋮	⋮	
16	16 stations	

Note 1) Double wiring: 2-position single, double, 3-position and 4-position valves can be used on all manifold stations.
Use of a 2-position single solenoid will result in an unused control signal. If this is not desired, order with a specified layout.
Note 2) Specified layout: Indicate the wiring specifications on the manifold specification sheet.
(Note that 2-position double, 3-position and 4-position valves cannot be used where single wiring has been specified.)
Note 3) Includes the number of blanking plate assemblies.
Note 4) For the model without the SI unit (S0), note the maximum number of solenoids of the SI unit that will be mounted. If the layout is specified, indicate it on the manifold specification sheet.

How to Order Manifold Assembly

Example (SS5Y5-M12SNAN-□)

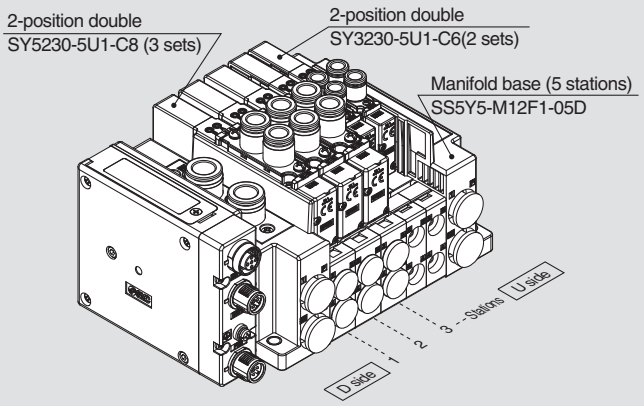

SS5Y5-M12F1-05D·····1 set (Type M12 5-station manifold base part no.)
∗ SY5230-5U1-C8·····3 sets (2-position double part no.)
∗ SY3230-5U1-C6·····2 sets (2-position double part no.)
∗ The asterisk denotes the symbol for assembly.
∗ Prefix it to the part nos. of the valve, etc.

- The valve arrangement is numbered as the 1st station from the D side.
- Under the manifold part number, state the valves to be mounted in order from the 1st station as shown in the figure above.
  If the arrangement becomes complicated, specify on a manifold specification sheet.

❹ P, E port entry

U Note)	U side (2 to 10 stations)
D Note)	D side (2 to 10 stations)
B	Both sides (2 to 24 stations)

Note) For type "S", supply/exhaust block assembly with built-in silencer, choose U or D for P port entry.

❺ SUP/EXH block assembly

Nil	Internal pilot
S	Internal pilot, Built-in silencer
R	External pilot

∗ For built-in silencer type, P and E ports are available on U and D sides. 3/5(E) port is plugged. The silencer exhaust port is located on the opposite side of P, E port entry. (Example: When the P, E port entry is D side, the silencer exhaust port is U side.)
∗ When the built-in silencer type is used, keep the exhaust port from coming in direct contact with water or other liquids.

❻ P, E port size (One-touch fittings)

Nil	ø10
N	ø3/8"

∗ For N, sizes are in inches.

❼ Mounting

Nil	Direct mounting	
D	DIN rail mounting (With DIN rail)	
D0	DIN rail mounting (Without DIN rail)	
D3	For 3 stations	Specify a longer rail than the standard length. [The SY5000 valve is now at a mountable length (manifold block length of 16 mm).]
⋮	⋮	
D24	For 24 stations	

∗ When it is necessary to mount a DIN rail without an SI unit, select D0 and order DIN rail length separately, referring to L3 in the dimensions. Refer to the SY3000/5000 series catalog (CAT.NAS11-103) for part numbers of DIN rail.

How to Order Valves (With two mounting screws)

Refer to the SY3000/5000 series catalog (CAT.NAS11-103) for details on valve specifications.

SY 3 1 3 0 □ □ □ □ – 5 □ □ 1 – C6 □ – □

❶ ❷ ❸ ❹ ❺ ❻ ❼ ❽ ❾ ❿ ⓫ ⓬ ⓭

Top ported

❶ Series

3	SY3000
5	SY5000

❷ Type of actuation

1	2-position single
2	2-position double
3	3-position closed center
4	3-position exhaust center
5	3-position pressure center
A*	4-position dual 3-port valve (N.C./N.C.)
B*	4-position dual 3-port valve (N.O./N.O.)
C*	4-position dual 3-port valve (N.C./N.O.)

* Only rubber seal type is available for the 4-position dual 3-port valve.

❸ Seal type

0	Rubber seal
1	Metal seal

❹ Pilot type

Nil	Internal pilot
R	External pilot

❺ Back pressure check valve (Built-in valve type)

Nil	None
H	Built-in

* Only rubber seal type.
  Manifold installed type is available if the back pressure check valve is required for a valve with metal seal. Refer to the SY3000/5000 series catalog (CAT.NAS11-103) for details. However, it is not recommended to use the built-in valve type and the manifold installed type at the same time because it will reduce the flow.
* The built-in valve type back pressure check valve is not available for the 3-position type.

❻ Pilot valve option

Nil	Standard (101 psi (0.7 MPa))
B	Quick response type (101 psi (0.7 MPa))
K*	High pressure type (145 psi (1.0 MPa))

* Only metal seal type is available for the high pressure type.

❼ Coil type

Nil	Standard
T	With power saving circuit (Continuous duty type)

* Be sure to select the power saving circuit type when a valve is continuously energized for long periods of time.
* Note the specified energizing time when power saving circuit is selected.

❽ Rated voltage

5	24 VDC

❾ Light/surge voltage suppressor and common specification

Nil	Without light/surge voltage suppressor (Non-polar)
R	With surge voltage suppressor (Non-polar)
U	With light/surge voltage suppressor (Non-polar)
S	With surge voltage suppressor (Positive common)
Z	With light/surge voltage suppressor (Positive common)
NS	With surge voltage suppressor (Negative common)
NZ	With light/surge voltage suppressor (Negative common)

* Only "Z" and "NZ" types are available for the product with power saving circuit. Select a valve from R, U, S or Z when the SI unit output polarity is Nil (Positive common). Select a valve from R, U, NS or NZ when the SI unit output polarity is N (Negative common).

❿ Manual override

Nil: Non-locking push type

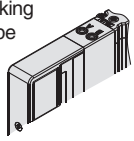

D: Push-turn locking slotted type

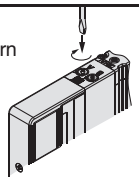

E: Push-turn locking manual type

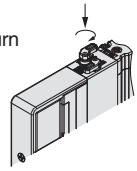

F: Slide locking type

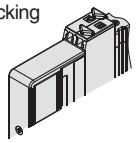

⓫ A, B port size

Thread piping

Symbol	Port size	Applicable series
M5	M5 x 0.8	SY3000
01	1/8	SY5000

One-touch fitting (Metric)

Symbol	A and B port	SY3000	SY5000
C2	ø2 One-touch fitting	●	—
C3	ø3.2 One-touch fitting	●	—
C4	ø4 One-touch fitting	●	●
C6	ø6 One-touch fitting	●	●
C8	ø8 One-touch fitting	—	●

One-touch fitting (Inch)

Symbol	A and B port	SY3000	SY5000
N1	ø1/8" One-touch fitting	●	—
N3	ø5/32" One-touch fitting	●	●
N7	ø1/4" One-touch fitting	●	●
N9	ø5/16" One-touch fitting	—	●

⓬ Thread type

Nil	Rc
F	G
N	NPT
T	NPTF

* Only Nil is available for M5.

⓭ Type of mounting screw

Nil	Round head combination screw
B	Hexagon socket head cap screw
K	Round head combination screw (Falling-out-prevention type)
H	Hexagon socket head cap screw (Falling-out-prevention type)

* For "K" and "H", the valve body cover has a drop prevention construction to stop the mounting screws from falling out when the valve is removed for maintenance etc.
* When ordering a valve individually, the base gasket is not included. Since the base gasket is attached to the manifold, please order the base gasket separately if it is needed for maintenance service. Refer to the SY3000/5000 series catalog (CAT.NAS11-103) for part numbers of base gasket and mounting screw.
* "B" and "H" cannot be selected for the individual SUP/EXH spacer assembly.

Refer to the SMC website or the SY3000/5000 series catalog (CAT.NAS11-103) for details on solenoid valve specifications, Common Precautions and Specific Product Precautions.

Dimensions: Type 12/Mixed Mounting Type

(mm)

SS5Y5-M12S□□- Stations U/D/B(-D)

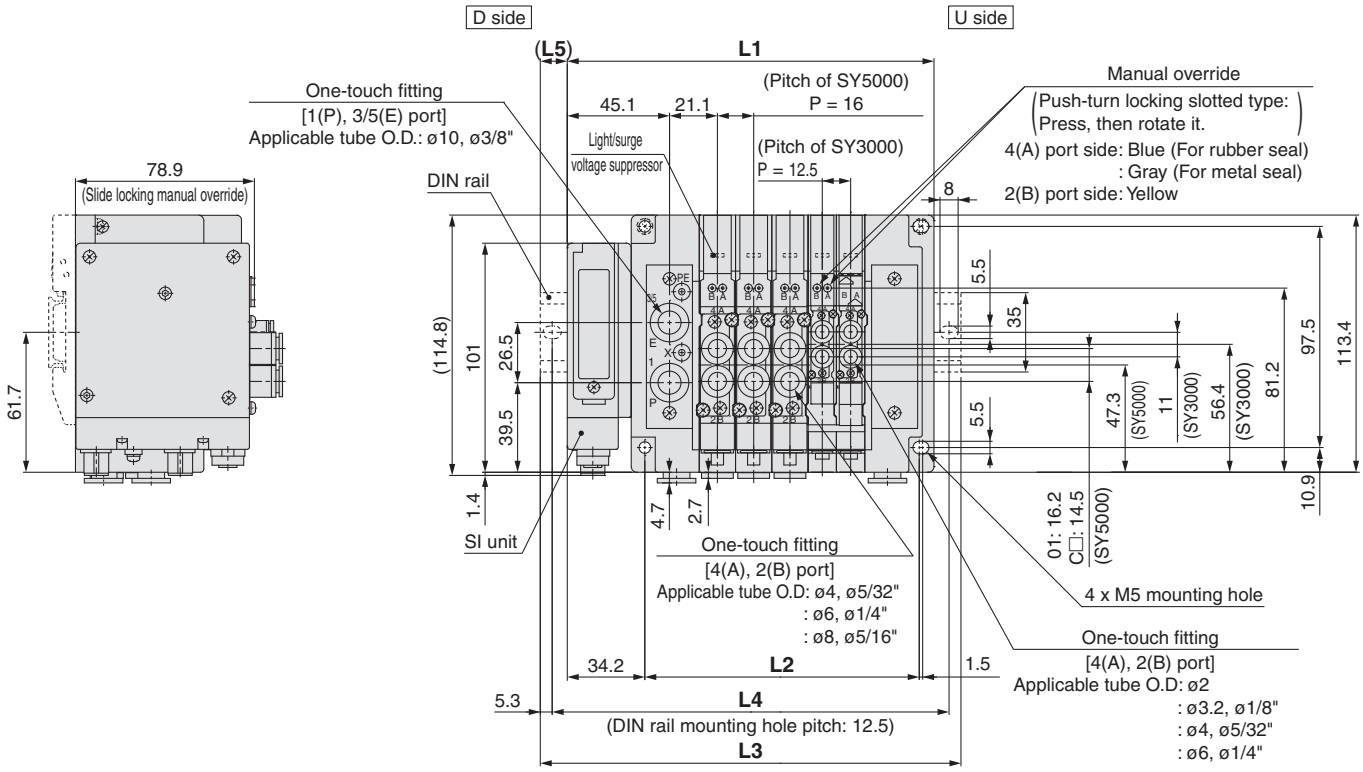

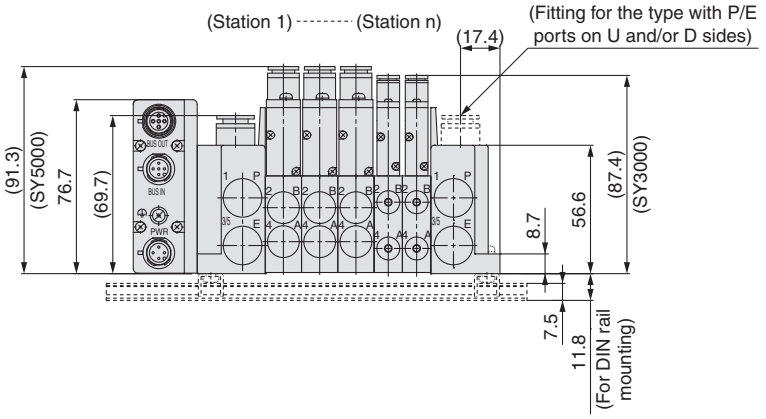

Note 1) These figures show the "SS5Y5-M12SQA-05D".
Note 2) Refer to page 16 for dimensions of D-sub communication connector, external pilot and built-in silencer.

EX260 Serial transmission Calculation of dimensions

L1 = 12.5 x n1 + 16 x n2 + 88.7
L2 = 12.5 x n1 + 16 x n2 + 48
M = L1/12.5 + 1 Remove all numbers after the decimal.
L3 = 12.5 x M + 23
L4 = L3 – 10.5
L5 = (L3 – L1)/2

n1: SY3000 Valve stations
n2: SY5000 Valve stations

Tie-rod Base:
For EX260 Integrated-type (For Output)
Serial Transmission System
Series SV

RoHS

How to Order Manifold

SS5V 1 – W 10S1 NA N D – 05 U □ – □ – □

❶ ❷ ❸ ❹ ❺ ❻ ❼ ❽

● **Enclosure IP67**
∗Refer to Note 1) of the ❷ SI unit specifications.

❶ Series

1	SV1000
2	SV2000
3	SV3000

❷ SI unit specifications

Symbol	Protocol	Number of outputs	Communication connector
0	Without SI unit		
QA	DeviceNet™	32	M12
QB		16	
NA	PROFIBUS DP	32	M12
NB		16	
NC		32	D-sub Note 1)
ND		16	
VA	CC-Link	32	M12
VB		16	
DA	EtherCAT	32	M12
DB		16	
FA	PROFINET	32	M12
FB		16	
EA	EtherNet/IP™	32	M12
EB		16	

● DIN rail cannot be selected for the product without SI unit.
Note 1) IP40 for the D-sub applicable communication connector specification. (The manifold part number is "SS5V□-10S1NC/ND□D".)
Note 2) For SI unit part number, refer to page 1.

❸ SI unit output polarity

Nil	Positive common
N	Negative common

Note) Without SI unit, the symbol is nil.

❹ Valve stations

In the case of the 32-output SI unit

Symbol	Stations	Note
02	2 stations	Double wiring Note 1)
⋮	⋮	
16	16 stations	
02	2 stations	Specified layout Note 2) (Available up to 32 solenoids)
⋮	⋮	
20	20 stations	

In the case of the 16-output SI unit

Symbol	Stations	Note
02	2 stations	Double wiring Note 1)
⋮	⋮	
08	8 stations	
02	2 stations	Specified layout Note 2) (Available up to 16 solenoids)
⋮	⋮	
16	16 stations	

Note 1) Double wiring: single, double, 3-position and 4-position solenoid valves can be used on all manifold stations.
Use of a single solenoid will result in an unused control signal. If this is not desired, order with a specified layout.
Note 2) Specified layout: Indicate the wiring specifications on the manifold specification sheet.
(Note that double, 3-position and 4- position valves cannot be used where single solenoid wiring has been specified.)
Note 3) Includes the number of blanking plate assemblies.

❺ P, E port entry

U	U side (2 to 10 stations)
D	D side (2 to 10 stations)
B	Both sides (2 to 20 stations)

❻ SUP/EXH block assembly

Nil	Internal pilot
S Note)	Internal pilot, Built-in silencer
R	External pilot
RS Note)	External pilot, Built-in silencer

Note) When the built-in silencer type is used, keep the exhaust port from coming in direct contact with water or other liquids.

❽ Mounting

Nil	Direct mounting	
D	DIN rail mounting (With DIN rail)	
D0	DIN rail mounting (Without DIN rail)	
D3	For 3 stations	When a longer DIN rail is desired than the specified stations. (Specify a longer rail than the standard length.)
⋮	⋮	
D20	For 20 stations	

❼ A, B port size (Metric)

Symbol	A, B port	P, E port	Applicable series
C3	ø3.2 One-touch fitting	ø8 One-touch fitting	SV1000
C4	ø4 One-touch fitting		
C6	ø6 One-touch fitting		
C4	ø4 One-touch fitting	ø10 One-touch fitting	SV2000
C6	ø6 One-touch fitting		
C8	ø8 One-touch fitting		
C6	ø6 One-touch fitting	ø12 One-touch fitting	SV3000
C8	ø8 One-touch fitting		
C10	ø10 One-touch fitting		
M	A, B ports mixed		

A, B port size (Inch)

Symbol	A, B port	P, E port	Applicable series
N1	ø1/8" One-touch fitting	ø5/16" One-touch fitting	SV1000
N3	ø5/32" One-touch fitting		
N7	ø1/4" One-touch fitting		
N3	ø5/32" One-touch fitting	ø3/8" One-touch fitting	SV2000
N7	ø1/4" One-touch fitting		
N9	ø5/16" One-touch fitting		
N7	ø1/4" One-touch fitting	ø3/8" One-touch fitting	SV3000
N9	ø5/16" One-touch fitting		
N11	ø3/8" One-touch fitting		
M	A, B ports mixed		

∗ In the case of mixed specifications (M), indicate separately on the manifold specification sheet.
∗ The X and PE port size of External pilot type (R, RS) are ø4 (mm) or ø5/32" (inch) for the SV1000/2000 series, and ø6 (mm) or ø1/4" (inch) for the SV3000 series.

How to Order Manifold Assembly

Example (SV1000)

Manifold
SS5V1-W10S1NAND-04B-C6 (1 set)

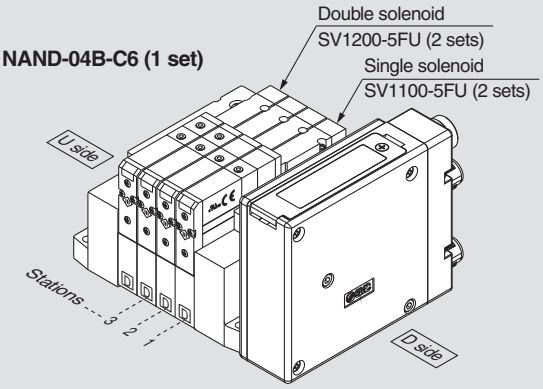

SS5V1-W10S1NAND-04B-C6·····1 set (Manifold part no.)
∗SV1100-5FU·····2 sets (Single solenoid part no.)
∗SV1200-5FU·····2 sets (Double solenoid part no.)

How to Order Valves

SV 1 1 0 0 ☐ ☐ – 5 F ☐ ☐ – ☐ – ☐

❶ ❷ ❸ ❹ ❺ ❻ ❼ ❽ Note)

❶ Series

1	SV1000
2	SV2000
3	SV3000

❷ Type of actuation

1	2-position single
2	2-position double
3	3-position closed center
4	3-position exhaust center
5	3-position pressure center
A	4-position dual 3-port valve: N.C./N.C.
B	4-position dual 3-port valve: N.O./N.O.
C	4-position dual 3-port valve: N.C./N.O.

∗ 4-position dual 3-port valves are applicable to the SV1000/2000 series only.

❸ Pilot type

Nil	Internal pilot
R	External pilot

∗ External pilot specification is not available for 4-position dual 3-port valves.

❹ Back pressure check valve

Nil	None
K	Built-in

∗ Built-in back pressure check valve type is applicable to the SV1000 series only.
∗ Back pressure check valve is not available for 3-position valve.
Note) Refer to Specific Product Precautions 2 in Best Pneumatics No. 1.

❺ Rated voltage

5	24 VDC

❻ Light/surge voltage suppressor

U	With light/surge voltage suppressor
R	With surge voltage suppressor

❼ Manual override

Nil: Non-locking push type	**D**: Push-turn locking slotted type
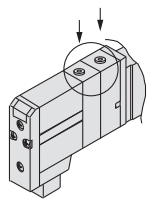	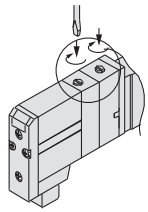

Note) Available with manifold block for station additions. Refer to Best Pneumatics No. 1.

❽ Made to Order

Nil	—
X90	Main valve fluororubber (Refer to page 448 in Best Pneumatics No. 1.)

Refer to the SMC website or the SV series in Best Pneumatics No.1 for details on solenoid valve specifications, Common Precautions and Specific Product Precautions.

Dimensions: For EX260 Integrated-type (For Output) Serial Transmission System/Series SV1000

(mm)

● Tie-rod base manifold: SS5V1-W10S1□□D - Stations U/D/B (S, R, RS)- C3, N1 / C4, N3 / C6, N7 (-D)

- When P, E port outlets are indicated on the U side or D side, the P, E ports on the opposite side are plugged.
- External pilot port positions and silencer discharge port positions are the same as P, E port outlet positions.

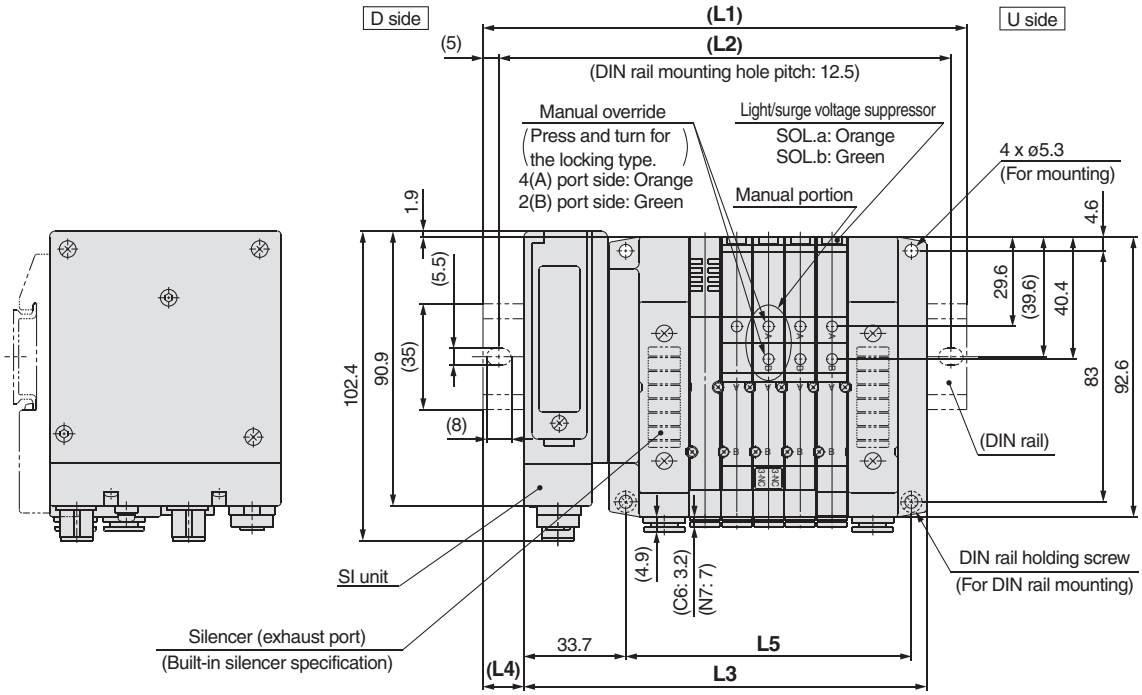

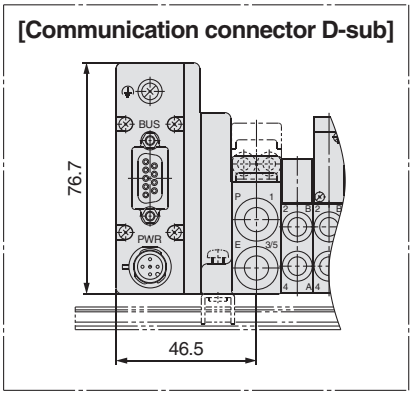

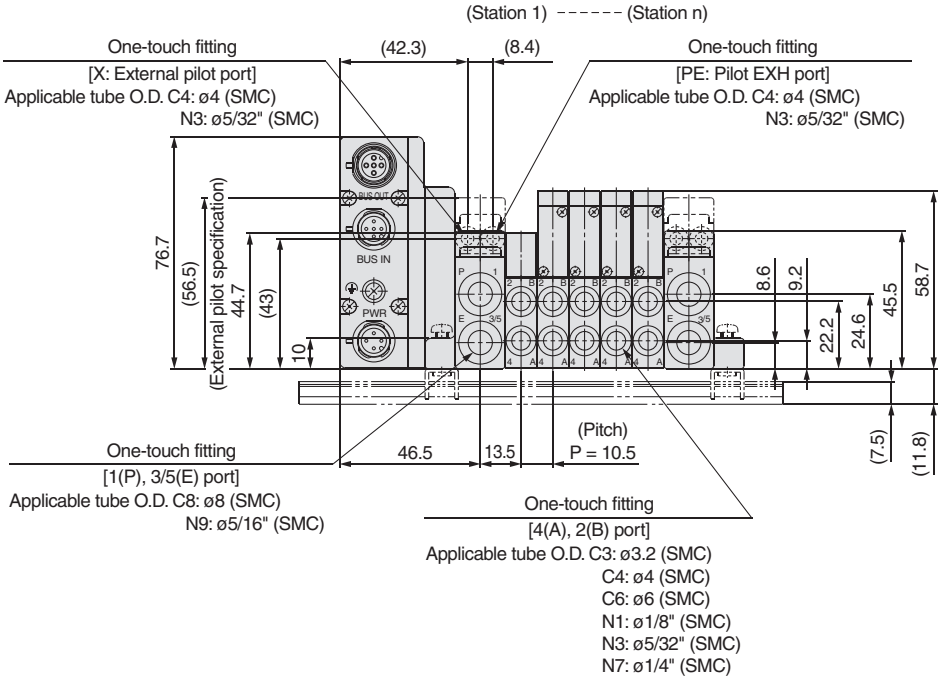

L: DIN Rail Overall Length

n: Stations

L \ n	2	3	4	5	6	7	8	9	10	11	12	13	14	15	16	17	18	19	20
L1	135.5	148	148	160.5	173	185.5	198	210.5	210.5	223	235.5	248	260.5	273	273	285.5	298	310.5	323
L2	125	137.5	137.5	150	162.5	175	187.5	200	200	212.5	225	237.5	250	262.5	262.5	275	287.5	300	312.5
L3	102.2	112.7	123.2	133.7	144.2	154.7	165.2	175.7	186.2	196.7	207.2	217.7	228.2	238.7	249.2	259.7	270.2	280.7	291.2
L4	16.5	17.5	12.5	13.5	14.5	15.5	16.5	17.5	12	13	14	15	16	17	12	13	14	15	16
L5	63	73.5	84	94.5	105	115.5	126	136.5	147	157.5	168	178.5	189	199.5	210	220.5	231	241.5	252

Dimensions: For EX260 Integrated-type (For Output) Serial Transmission System/Series SV2000

(mm)

● Tie-rod base manifold: SS5V2-W10S1□□D-Stations U/D/B (S, R, RS)- C4, N3 / C6, N7 / C8, N9 (-D)

- When P, E port outlets are indicated on the U side or D side, the P, E ports on the opposite side are plugged.
- External pilot port positions and silencer discharge port positions are the same as P, E port outlet positions.

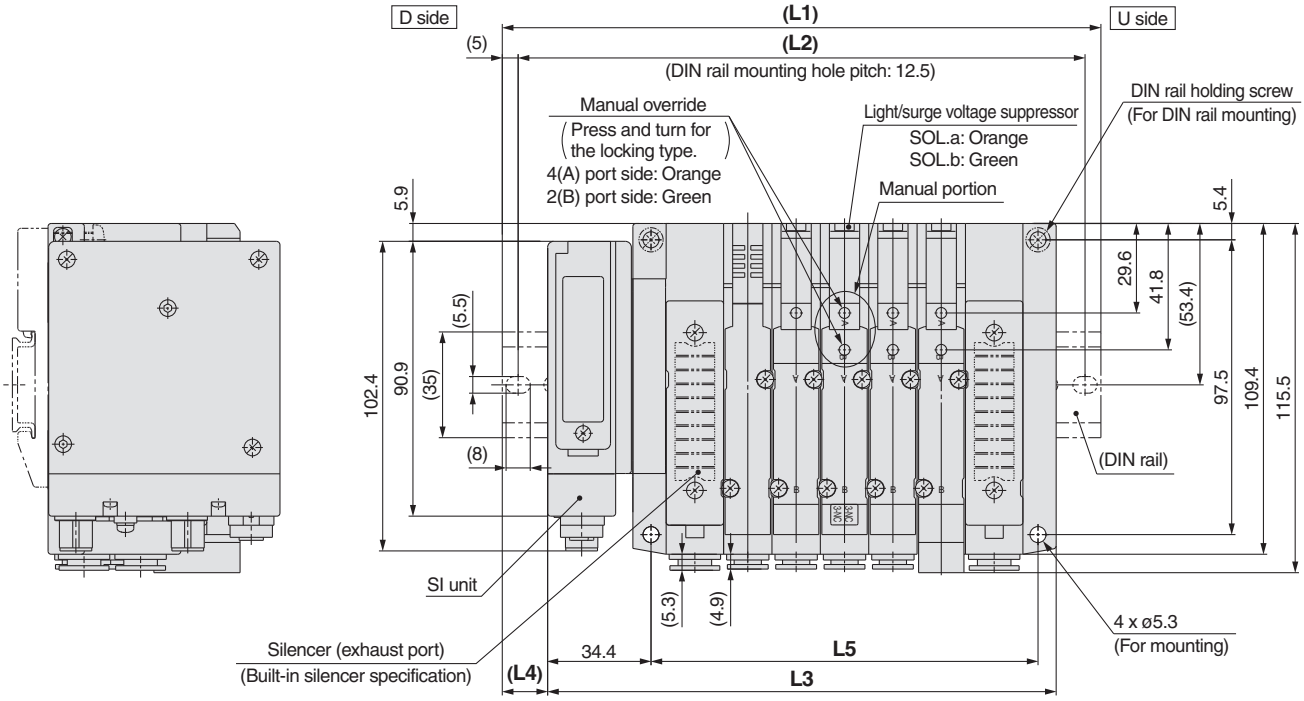

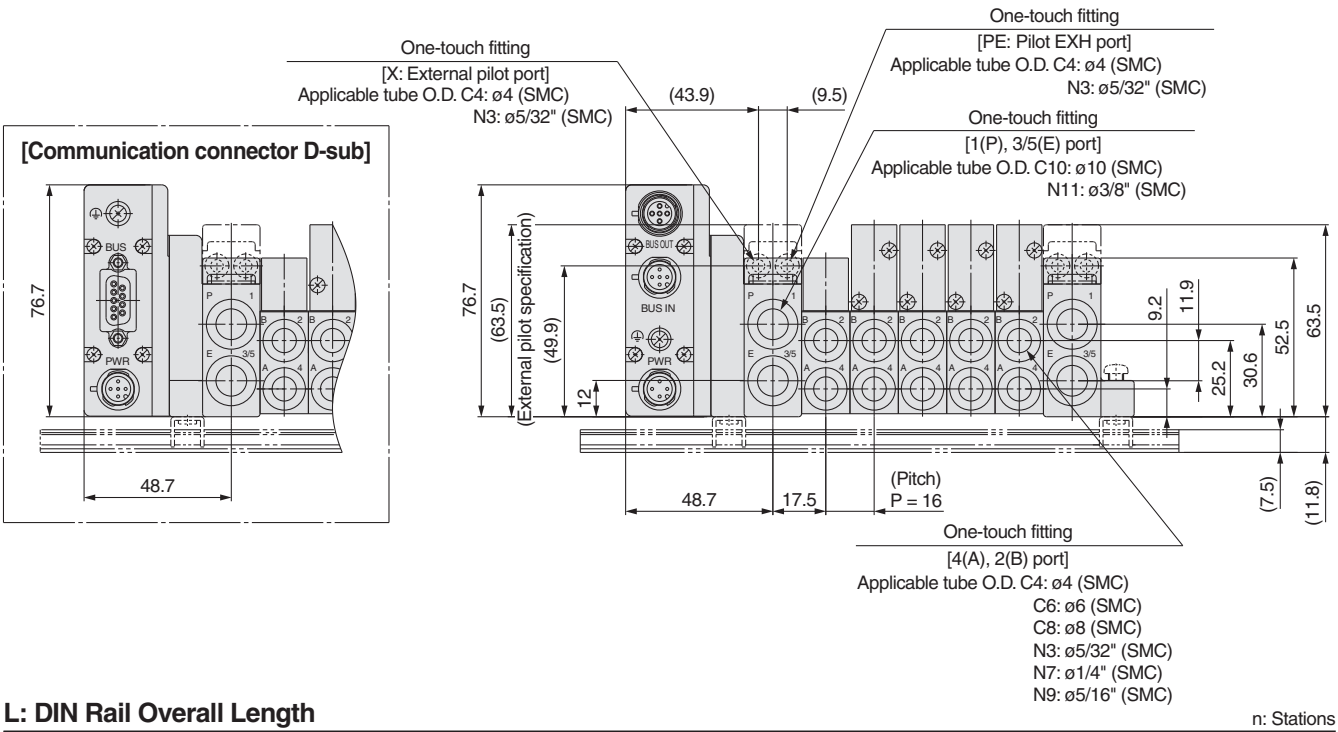

L: DIN Rail Overall Length

n: Stations

L \ n	2	3	4	5	6	7	8	9	10	11	12	13	14	15	16	17	18	19	20
L1	148	160.5	185.5	198	210.5	235.5	248	260.5	273	298	310.5	323	335.5	360.5	373	385.5	410.5	423	435.5
L2	137.5	150	175	187.5	200	225	237.5	250	262.5	287.5	300	312.5	325	350	362.5	375	400	412.5	425
L3	120.2	136.2	152.2	168.2	184.2	200.2	216.2	232.2	248.2	264.2	280.2	296.2	312.2	328.2	344.2	360.2	376.2	392.2	408.2
L4	14	12	16.5	15	13	17.5	16	14	12.5	17	15	13.5	11.5	16	14.5	12.5	17	15.5	13.5
L5	80	96	112	128	144	160	176	192	208	224	240	256	272	288	304	320	336	352	368

Dimensions: For EX260 Integrated-type (For Output) Serial Transmission System/Series SV3000

(mm)

● Tie-rod base manifold: SS5V3-W10S1□□D-Stations U/D/B (S, R, RS)- C6, N7 / C8, N9 / C10, N11 (-D)

- When P, E port outlets are indicated on the U side or D side, the P, E ports on the opposite side are plugged.
- External pilot port positions and silencer discharge port positions are the same as P, E port outlet positions.

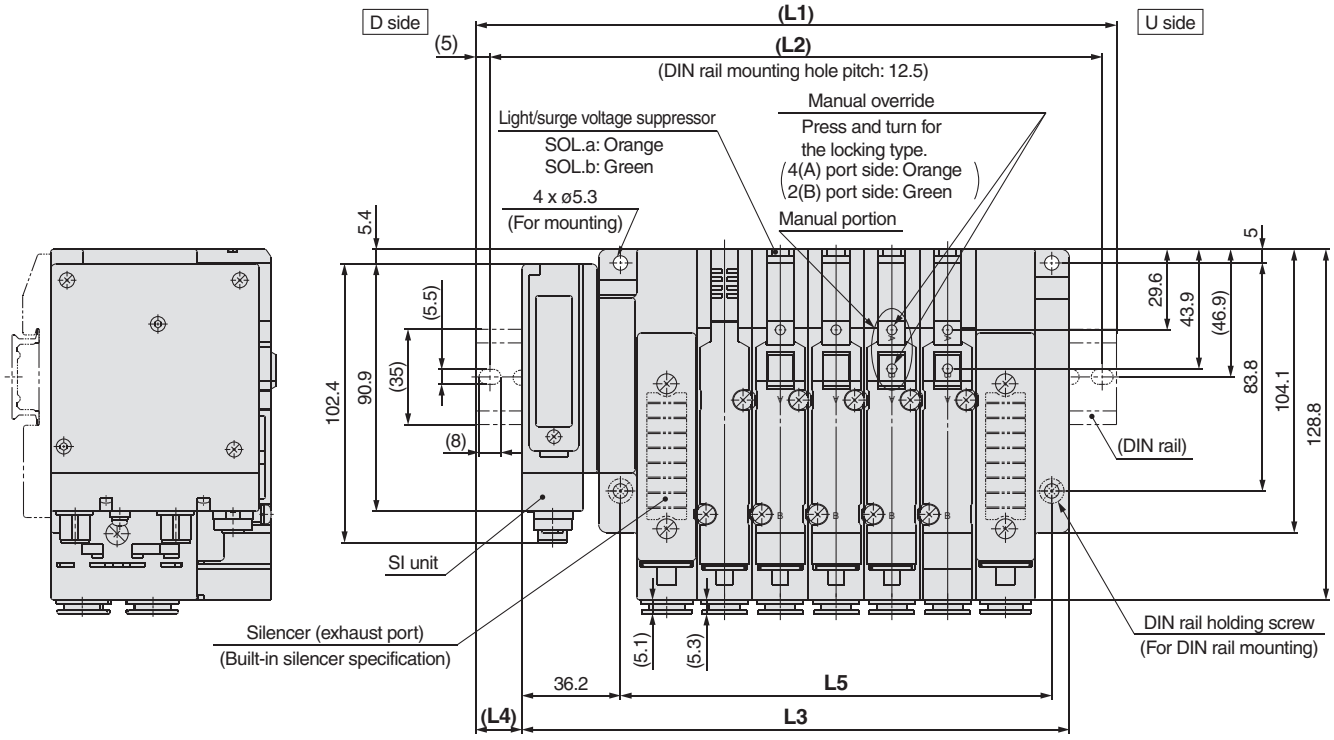

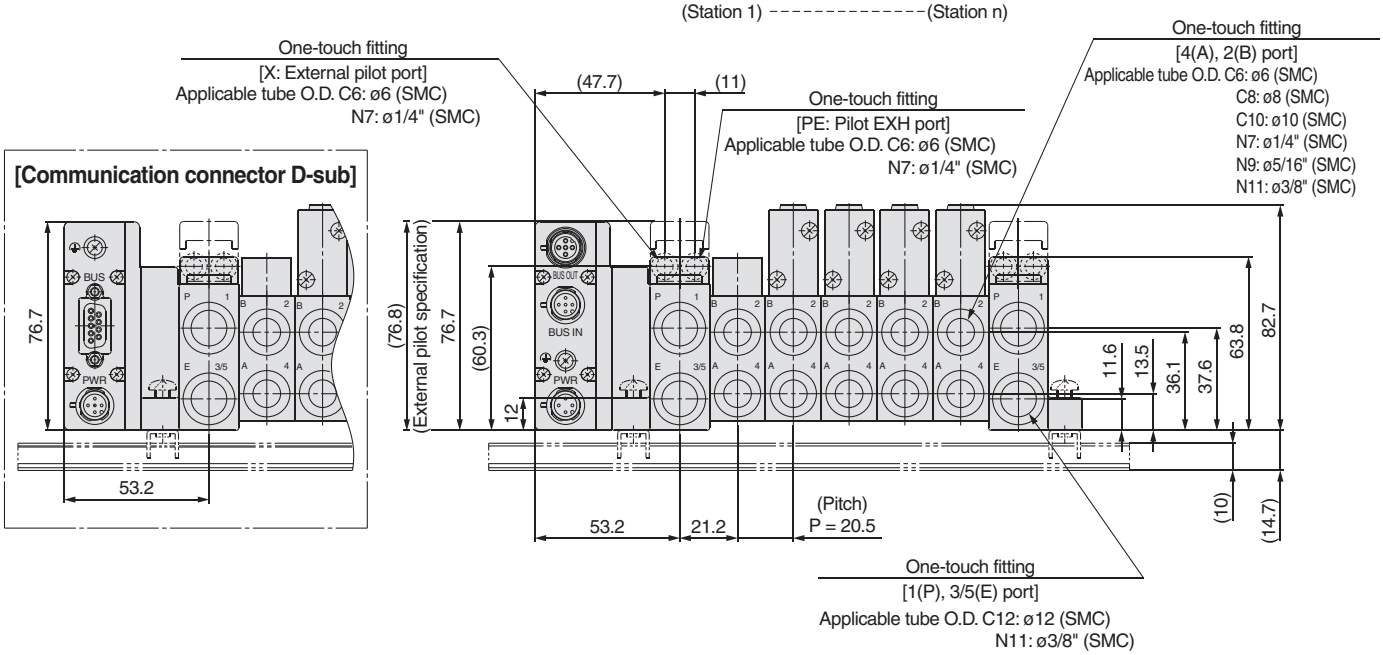

L: DIN Rail Overall Length

n: Stations

L \ n	2	3	4	5	6	7	8	9	10	11	12	13	14	15	16	17	18	19	20
L1	173	185.5	210.5	235.5	248	273	298	310.5	335.5	348	373	398	410.5	435.5	460.5	473	498	523	535.5
L2	162.5	175	200	225	237.5	262.5	287.5	300	325	337.5	362.5	387.5	400	425	450	462.5	487.5	512.5	525
L3	139.7	160.2	180.7	201.2	221.7	242.2	262.7	283.2	303.7	324.2	344.7	365.2	385.7	406.2	426.7	447.2	467.7	488.2	508.7
L4	16.5	12.5	15	17	13	15.5	17.5	13.5	16	12	14	16.5	12.5	14.5	17	13	15	17.5	13.5
L5	97	117.5	138	158.5	179	199.5	220	240.5	261	281.5	302	322.5	343	363.5	384	404.5	425	445.5	466

Plug-in Unit: For EX260 Integrated-type (For Output) Serial Transmission System

Series VQC1000

CE RoHS

How to Order Manifold

VV5QC 1 1 – 08 C6 SNA N – B ····· S Kit

❶ ❷ ❸ ❹ ❺ ❻ ❼

❶ Series

1	VQC1000

❷ Manifold model

1	Plug-in unit

❸ Stations

In the case of the 32-output SI unit

Symbol	Stations	Note
02	2 stations	Double wiring Note 1)
⋮	⋮	
12	12 stations	
02	2 stations	Specified layout Note 2) (Available up to 24 solenoids)
⋮	⋮	
24	24 stations	

In the case of the 16-output SI unit

Symbol	Stations	Note
02	2 stations	Double wiring Note 1)
⋮	⋮	
08	8 stations	
02	2 stations	Specified layout Note 2) (Available up to 16 solenoids)
⋮	⋮	
16	16 stations	

Note 1) Double wiring: single, double, 3-position and 4-position solenoid valves can be used on all manifold stations.
Use of a single solenoid will result in an unused control signal. If this is not desired, order with a specified layout.
Note 2) Specified layout: Indicate the wiring specifications on the manifold specification sheet.
(Note that 2-position double, 3-position and 4-position valves cannot be used where single wiring has been specified.)
Note 3) Includes the number of blanking plate assemblies.

❹ Cylinder port size

C3	With ø3.2 One-touch fitting
C4	With ø4 One-touch fitting
C6	With ø6 One-touch fitting
M5	M5 thread
CM	Mixed sizes and with port plug
L3	Top ported elbow with ø3.2 One-touch fitting
L4	Top ported elbow with ø4 One-touch fitting
L6	Top ported elbow with ø6 One-touch fitting
L5	M5 thread
B3	Bottom ported elbow with ø3.2 One-touch fitting
B4	Bottom ported elbow with ø4 One-touch fitting
B6	Bottom ported elbow with ø6 One-touch fitting
B5	M5 thread
LM	Elbow port, mixed sizes
MM Note2)	Mixed size for different types of piping, option installed

Note 1) Indicate the sizes on the manifold specification sheet in the case of "CM", "LM".
Note 2) When selecting the mixed size for different types of piping or dual flow fitting assembly, enter "MM" and give instructions in the manifold specification sheet.
Note 3) Symbols for inch sizes are as follows:
- N1: ø1/8"
- N3: ø5/32"
- N7: ø1/4"
- NM: Mixed

The top ported elbow is LN□ and the bottom ported elbow is BN□.

❻ SI unit output polarity

Nil	Positive common
N	Negative common

❼ Option

Nil	None
B	With back pressure check valve (All stations) Note 2)
D	With DIN rail (Rail length: Standard)
D□	With DIN rail (Rail length: Special) Note 3)
K	Special wiring spec. (Except double wiring) Note 4)
N	With name plate
R	External pilot Note 5)
S	Built-in silencer, Direct exhaust Note 6)

Note 1) When two or more symbols are specified, indicate them alphabetically.
Example: -BRS
Note 2) When the back pressure check valve is desired, and is to be installed only in certain manifold stations, specify the mounting position on the manifold specification sheet.
Note 3) For special DIN rail length, indicate "D□".
(Enter the number of stations inside □.)
Example: -D08
In this case, stations will be mounted on a DIN rail for 8 stations regardless of the actual number of manifold stations.
The specified number of stations must be larger than the number of stations on the manifold.
Indicate "-D0" for the option without DIN rail.
Note 4) Specify wiring type of each station on the manifold specification sheet.
Note 5) For external pilot option, "-R", indicate the external pilot specification "R" for the applicable valves as well.
Note 6) Built-in silencer type does not satisfy IP67.
Note 7) When the "SD0" (Without SI unit) is specified, "-D", "-D□" cannot be selected.

❺ Kit type

S **Kit (Serial transmission kit (for Output))**

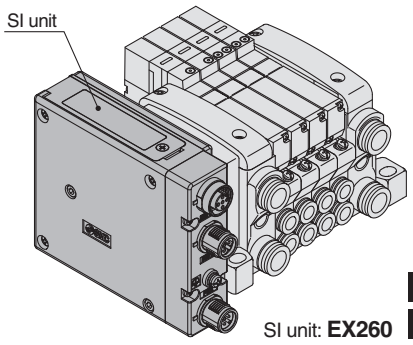

SI unit: **EX260**

IP40 specification
IP67 specification

Symbol	Protocol	Number of outputs	Communication connector
SD0	Without SI unit		
SQA	DeviceNet™	32	M12
SQB		16	
SNA	PROFIBUS DP	32	M12
SNB		16	
SNC		32	D-sub Note 1)
SND		16	
SVA	CC-Link	32	M12
SVB		16	
SDA	EtherCAT	32	M12
SDB		16	
SFA	PROFINET	32	M12
SFB		16	
SEA	EtherNet/IP™	32	M12
SEB		16	

Note 1) D-sub S kit: IP40 specification (IP67 specification for all other S kits)
Note 2) For SI unit part number, refer to page 1.

How to Order Valves

VQC 1 1 0 0 □ – 5 □ □ 1

Series VQC1000 ❶ ❷ ❸ ❹ ❺ ❻

❶ Type of actuation

1	2-position single 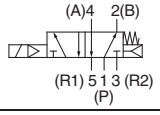
2	2-position double (Metal) 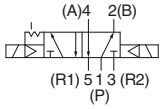
	2-position double (Rubber) 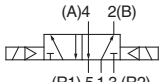
3	3-position closed center 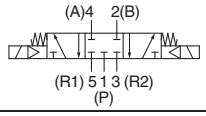
4	3-position exhaust center 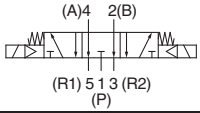
5	3-position pressure center 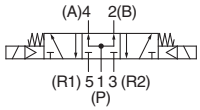
A Note)	4-position dual 3-port valve (A) 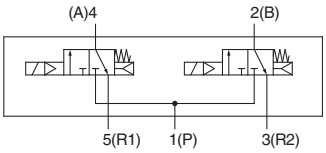
B Note)	4-position dual 3-port valve (B) 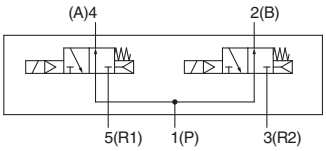
C Note)	4-position dual 3-port valve (C) 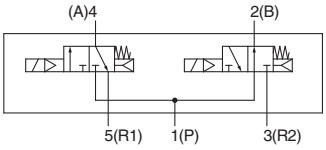

Note) Only rubber seal type

❷ Seal type

0	Metal seal
1	Rubber seal

❸ Function

Nil	Standard (0.4 W)
B	Quick response type (0.95 W)
K Note 2)	High pressure type (145 psi (1.0 MPa), 0.95 W)
N Note 3)	Negative common
R Note 4)	External pilot

Note 1) When two or more symbols are specified, indicate them alphabetically. However, combination of "B" and "K" is not possible.
Note 2) Only metal seal type
Note 3) When negative common is specified for SI unit, select and mount the valve of negative common.
Note 4) Not applicable for dual 3-port valves

❹ Coil voltage

5	24 VDC

❺ Light/surge voltage suppressor

Nil	Yes

❻ Manual override

Nil: Non-locking push type (Tool required)

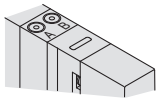

B: Locking type (Tool required)

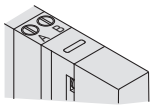

C: Locking type (Manual)

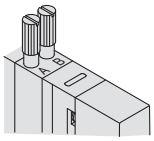

D: Slide locking type (Manual)

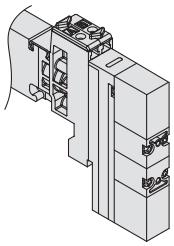

Refer to the SMC website or the VQC1000/2000 series catalog (CAT.NAS11-101) for details on solenoid valve specifications, Common Precautions and Specific Product Precautions.

(mm)

VV5QC11
S Kit (Serial transmission kit: EX260)

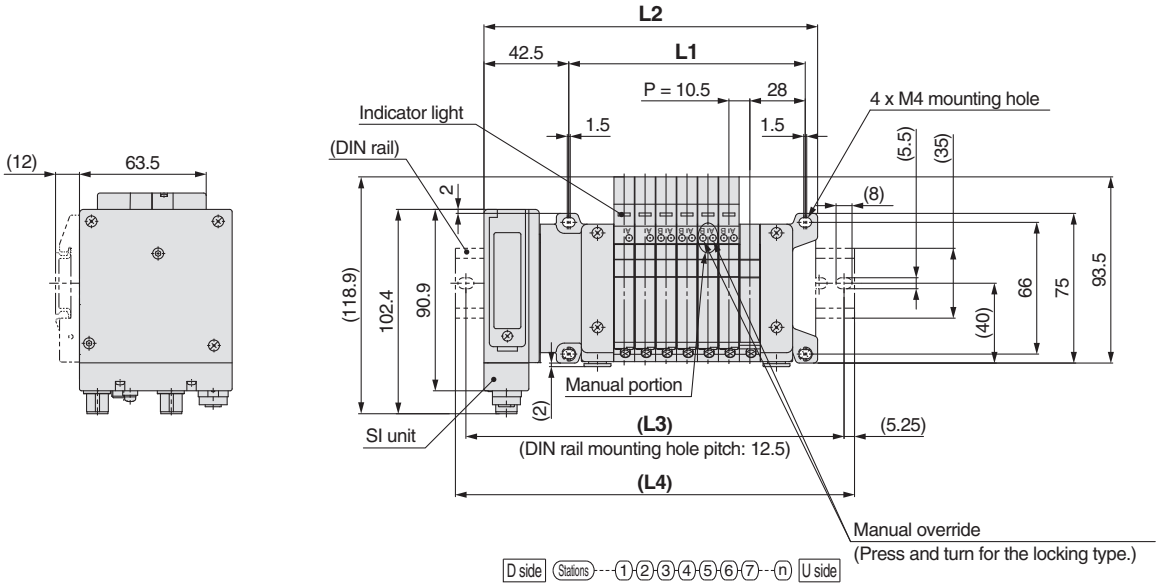

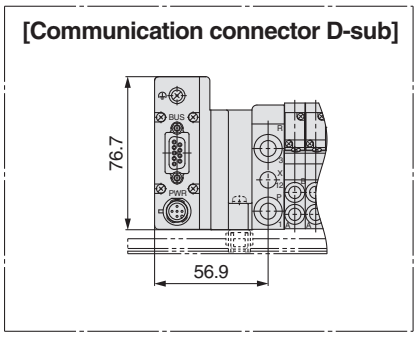

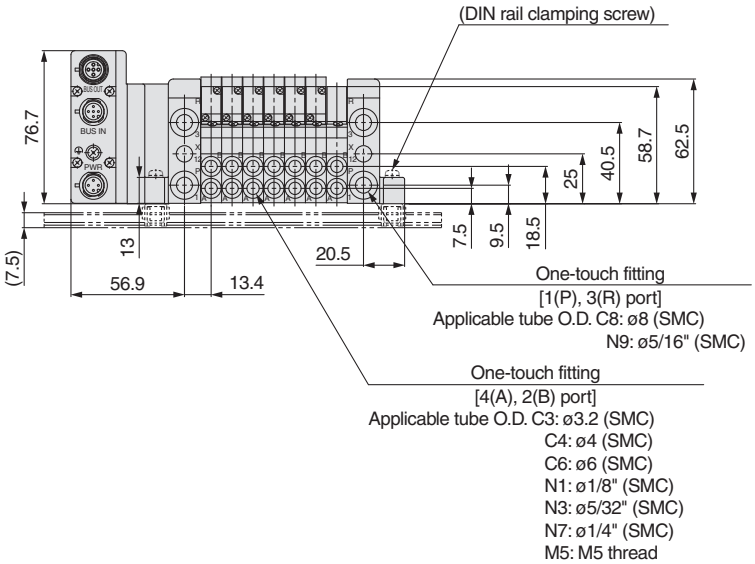

n: Stations (Maximum 24 stations)

L \ n	1	2	3	4	5	6	7	8	9	10	11	12	13	14	15	16	17	18	19	20	21	22	23	24
L1	55.5	66	76.5	87	97.5	108	118.5	129	139.5	150	160.5	171	181.5	192	202.5	213	223.5	234	244.5	255	265.5	276	286.5	297
L2	104.2	114.7	125.2	135.7	146.2	156.7	167.2	177.7	188.2	198.7	209.2	219.7	230.2	240.7	251.2	261.7	272.2	282.7	293.2	303.7	314.2	324.7	335.2	345.7
L3	127	139.5	152	164.5	177	177	189.5	202	214.5	227	239.5	239.5	252	264.5	277	289.5	302	314.5	314.5	327	339.5	352	364.5	377
L4	137.5	150	162.5	175	187.5	187.5	200	212.5	225	237.5	250	250	262.5	275	287.5	300	312.5	325	325	337.5	350	362.5	375	387.5

Plug-in Unit: For EX260 Integrated-type (For Output) Serial Transmission System

Series VQC2000

CE RoHS

How to Order Manifold

VV5QC 2 1 – 08 C6 SNA N – B ····· S Kit

❶ ❷ ❸ ❹ ❺ ❻ ❼

❶ Series

2	VQC2000

❷ Manifold model

1	Plug-in unit

❸ Stations

In the case of the 32-output SI unit

Symbol	Stations	Note
02	2 stations	Double wiring Note 1)
⋮	⋮	
12	12 stations	
02	2 stations	Specified layout Note 2) (Available up to 24 solenoids)
⋮	⋮	
24	24 stations	

In the case of the 16-output SI unit

Symbol	Stations	Note
02	2 stations	Double wiring Note 1)
⋮	⋮	
08	8 stations	
02	2 stations	Specified layout Note 2) (Available up to 16 solenoids)
⋮	⋮	
16	16 stations	

Note 1) Double wiring: single, double, 3-position and 4-position solenoid valves can be used on all manifold stations.
Use of a single solenoid will result in an unused control signal. If this is not desired, order with a specified layout.
Note 2) Specified layout: Indicate the wiring specifications on the manifold specification sheet.
(Note that 2-position double, 3-position and 4-position valves cannot be used where single wiring has been specified.)
Note 3) Includes the number of blanking plate assemblies.

❹ Cylinder port size

C4	ø4 One-touch fitting
C6	ø6 One-touch fitting
C8	ø8 One-touch fitting
CM	Mixed sizes and with port plug
L4	Top ported elbow with ø4 One-touch fitting
L6	Top ported elbow with ø6 One-touch fitting
L8	Top ported elbow with ø8 One-touch fitting
B4	Bottom ported elbow with ø4 One-touch fitting
B6	Bottom ported elbow with ø6 One-touch fitting
B8	Bottom ported elbow with ø8 One-touch fitting
LM	Elbow port, mixed sizes
MM Note 2)	Mixed size for different types of piping, option installed

Note 1) Indicate the sizes on the manifold specification sheet in the case of "CM", "LM".
Note 2) When selecting the mixed size for different types of piping or dual flow fitting assembly, enter "MM" and give instructions in the manifold specification sheet.
Note 3) Symbols for inch sizes are as follows:
- N3: ø5/32"
- N7: ø1/4"
- N9: ø5/16"
- NM: Mixed

The top ported elbow is LN□ and the bottom ported elbow is BN□.

❻ SI unit output polarity

Nil	Positive common
N	Negative common

❼ Option

Nil	None
B	With back pressure check valve (All stations) Note 2)
D	With DIN rail (Rail length: Standard)
D□	With DIN rail (Rail length: Special) Note 3)
K	Special wiring spec. (Except double wiring) Note 4)
N	With name plate
R	External pilot Note 5)
S	Built-in silencer, Direct exhaust Note 6)
T	P and R ports included on both sides of the U side Note 7)

Note 1) When two or more symbols are specified, indicate them alphabetically.
Example: -BRS
Note 2) When the back pressure check valve is desired, and is to be installed only in certain manifold stations, specify the mounting position on the manifold specification sheet.
Note 3) For special DIN rail length, indicate "D□".
(Enter the number of stations inside □.)
Example: -D08
In this case, stations will be mounted on a DIN rail for 8 stations regardless of the actual number of manifold stations.
The specified number of stations must be larger than the number of stations on the manifold.
Indicate "-D0" for the option without DIN rail.
Note 4) Specify wiring type of each station on the manifold specification sheet.
Note 5) For external pilot option, "-R", indicate the external pilot specification "R" for the applicable valves as well.
Note 6) Built-in silencer type does not satisfy IP67.
Note 7) 2 ports for SUP and EXH are included on both sides of U side (cylinder port and coil side) with ø12 One-touch fittings.
Note 8) When the "SD0" (Without SI unit) is specified, "-D", "-D□" cannot be selected.

❺ Kit type

S **Kit (Serial transmission kit (for Output))**

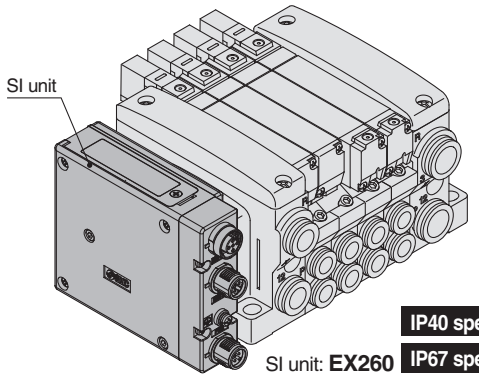

SI unit: **EX260** IP40 specification IP67 specification

Symbol	Protocol	Number of outputs	Communication connector
SD0	Without SI unit		
SQA	DeviceNet™	32	M12
SQB		16	
SNA	PROFIBUS DP	32	M12
SNB		16	
SNC		32	D-sub Note 1)
SND		16	
SVA	CC-Link	32	M12
SVB		16	
SDA	EtherCAT	32	M12
SDB		16	
SFA	PROFINET	32	M12
SFB		16	
SEA	EtherNet/IP™	32	M12
SEB		16	

Note 1) D-sub S kit: IP40 specification (IP67 specification for all other S kits)
Note 2) For SI unit part number, refer to page 1.

How to Order Valves

VQC 2 1 0 0 □ – 5 □ □ 1

Series VQC2000 ❶ ❷ ❸ ❹ ❺ ❻

❶ Type of actuation

1	2-position single 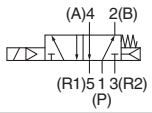
2	2-position double (Metal) 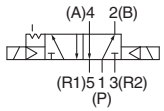
	2-position double (Rubber) 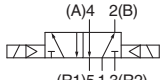
3	3-position closed center 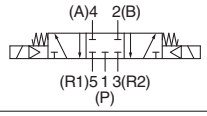
4	3-position exhaust center 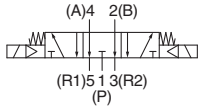
5	3-position pressure center 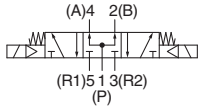
A Note)	4-position dual 3-port valve (A) 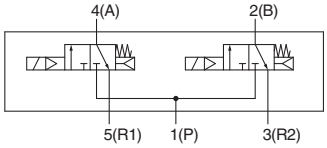
B Note)	4-position dual 3-port valve (B) 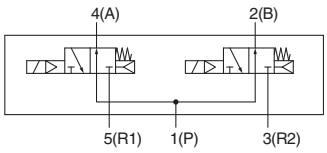
C Note)	4-position dual 3-port valve (C) 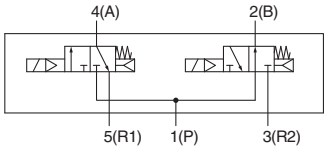

Note) Only rubber seal type

❷ Seal type

0	Metal seal
1	Rubber seal

❸ Function

Nil	Standard (0.4 W)
B	Quick response type (0.95 W)
K Note 2)	High pressure type (145 psi (1.0 MPa), 0.95 W)
N Note 3)	Negative common
R Note 4)	External pilot

Note 1) When two or more symbols are specified, indicate them alphabetically. However, combination of "B" and "K" is not possible.
Note 2) Only metal seal type
Note 3) When negative common is specified for SI unit, select and mount the valve of negative common.
Note 4) Not applicable for dual 3-port valves

❹ Coil voltage

5	24 VDC

❺ Light/surge voltage suppressor

Nil	Yes

❻ Manual override

Nil: Non-locking push type (Tool required)

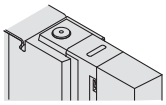

B: Locking type (Tool required)

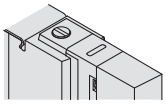

C: Locking type (Manual)

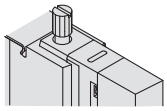

D: Slide locking type (Manual)

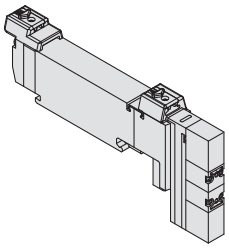

Refer to the SMC website or the VQC1000/2000 series catalog (CAT.NAS11-101) for details on solenoid valve specifications, Common Precautions and Specific Product Precautions.

(mm)

VV5QC21
S Kit (Serial transmission kit: EX260)

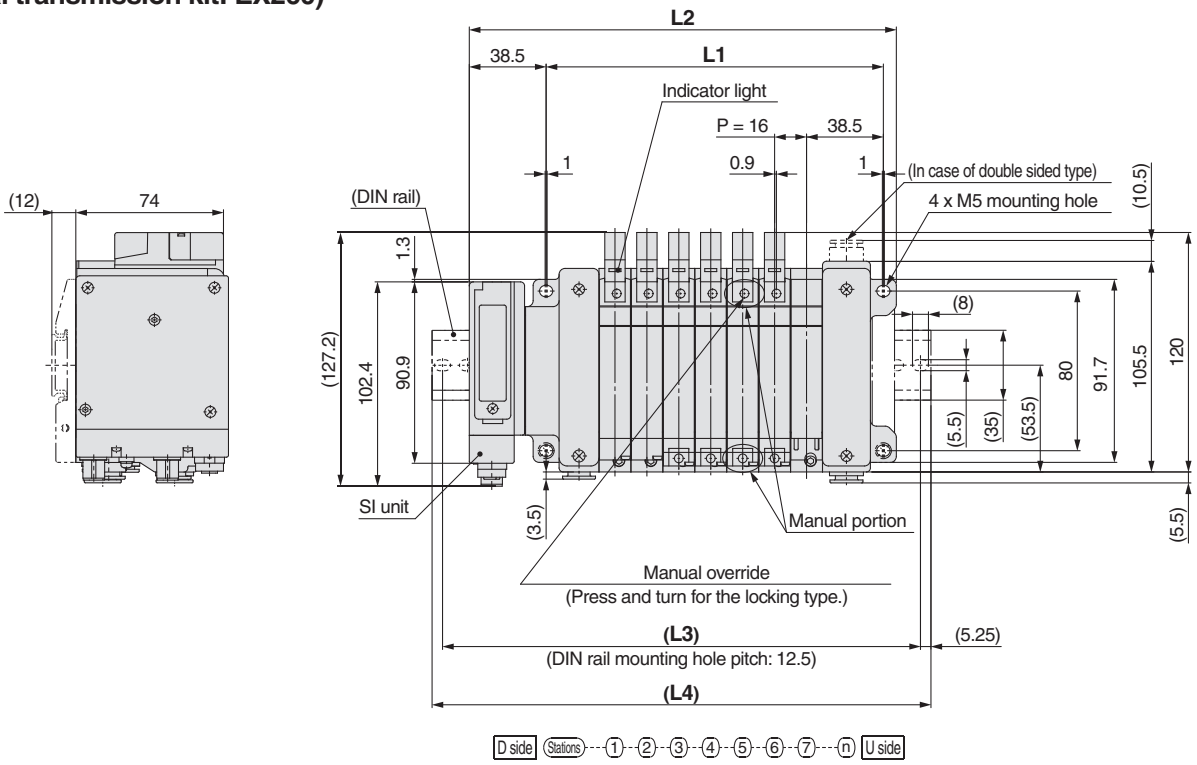

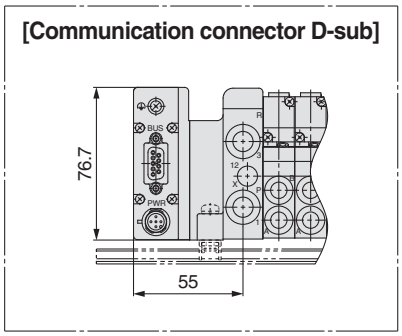

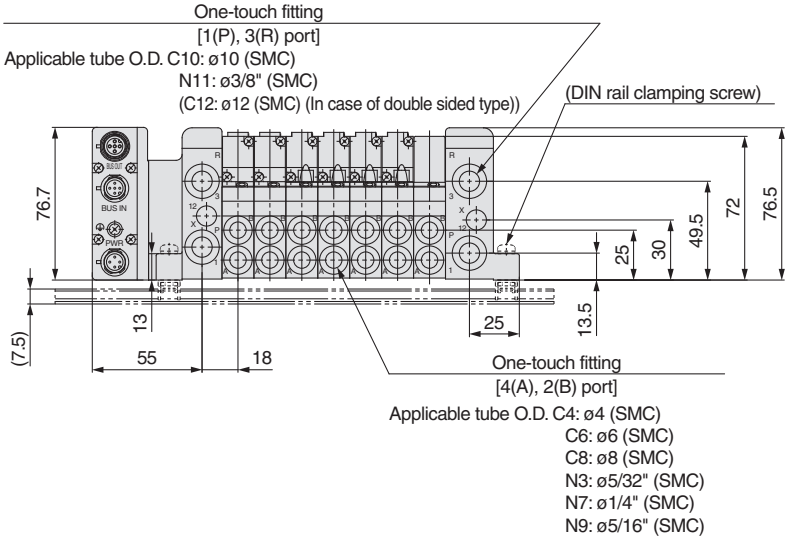

n: Stations (Maximum 24 stations)

L \ n	1	2	3	4	5	6	7	8	9	10	11	12	13	14	15	16	17	18	19	20	21	22	23	24
L1	73	89	105	121	137	153	169	185	201	217	233	249	265	281	297	313	329	345	361	377	393	409	425	441
L2	118	134	150	166	182	198	214	230	246	262	278	294	310	326	342	358	374	390	406	422	438	454	470	486
L3	139.5	164.5	177	189.5	202	227	239.5	252	277	289.5	302	314.5	339.5	352	364.5	389.5	402	414.5	427	452	464.5	477	489.5	514.5
L4	150	175	187.5	200	212.5	237.5	250	262.5	287.5	300	312.5	325	350	362.5	375	400	412.5	425	437.5	462.5	475	487.5	500	525

Base Mounted

Plug-in Unit: For EX260 Integrated-type (For Output) Serial Transmission System

Series VQC4000

CE RoHS

How to Order Manifold

VV5QC 4 1 – 16 03 ☐ SNA N – ☐ ····· S Kit

❶ ❷ ❸ ❹ ❺ ❻ ❼ ❽

❶ Series

4	VQC4000

❷ Manifold model

1	Plug-in unit

❹ Cylinder port size

C8	With ø8 One-touch fitting
C10	With ø10 One-touch fitting
C12	With ø12 One-touch fitting
02	Rc1/4
03	Rc3/8
B	Bottom ported Rc1/4
CM	Mixed

Note 1) Indicate the sizes on the manifold specification sheet in the case of "CM".
Note 2) Symbols for inch sizes are as follows:
<In the case of One-touch fittings>
- N7: ø1/4"
- N9: ø5/16"
- N11: ø3/8"
- NM: Mixed

❺ Thread type

Nil	Rc
F	G
T	NPT/NPTF

❸ Stations

In the case of the 32-output SI unit

Symbol	Stations	Note
01	1 station	Double wiring Note 1)
⋮	⋮	
12	12 stations	
01	1 station	Specified layout Note 2) (Available up to 24 solenoids)
⋮	⋮	
16	16 stations	

In the case of the 16-output SI unit

Symbol	Stations	Note
01	1 station	Double wiring Note 1)
⋮	⋮	
08	8 stations	
01	1 station	Specified layout Note 2) (Available up to 16 solenoids)
⋮	⋮	
16	16 stations	

Note 1) Double wiring: single, double, 3-position and 4-position solenoid valves can be used on all manifold stations.
Use of a single solenoid will result in an unused control signal. If this is not desired, order with a specified layout.
Note 2) Specified layout: Indicate the wiring specifications on the manifold specification sheet.
(Note that 2-position double, 3-position and 4-position valves cannot be used where single wiring has been specified.)
Note 3) Includes the number of blanking plate assemblies.

❼ SI unit output polarity

Nil	Positive common
N	Negative common

❽ Option

Nil	None
S	Built-in silencer, Direct exhaust Note 1)
K	Special wiring spec. (Except double wiring) Note 2)

Note 1) Built-in silencer type does not satisfy IP67.
Note 2) Specify wiring type of each station on the manifold specification sheet.

❻ Kit type

S **Kit (Serial transmission kit (for Output))**

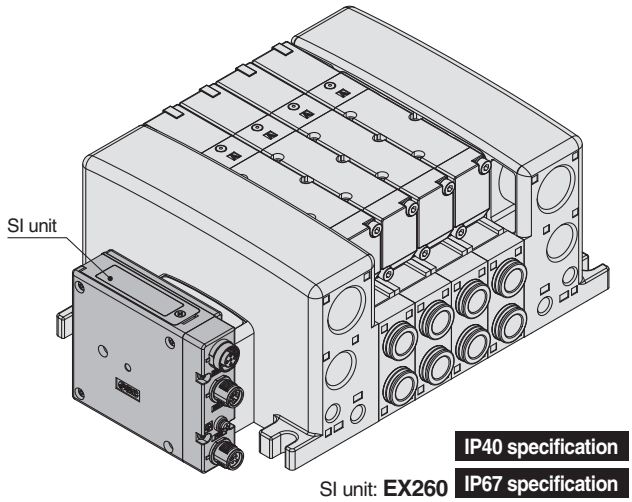

IP40 specification
SI unit: **EX260** IP67 specification

Symbol	Protocol	Number of outputs	Communication connector
SD0A	Without SI unit		
SQA	DeviceNet™	32	M12
SQB		16	
SNA	PROFIBUS DP	32	M12
SNB		16	
SNC		32	D-sub Note 1)
SND		16	
SVA	CC-Link	32	M12
SVB		16	
SDA	EtherCAT	32	M12
SDB		16	
SFA	PROFINET	32	M12
SFB		16	
SEA	EtherNet/IP™	32	M12
SEB		16	

Note 1) D-sub S kit: IP40 specification (IP67 specification for all other S kits)
Note 2) For SI unit part number, refer to page 1.

How to Order Valves

VQC 4 1 0 0 □ – 5 □ □

Series VQC4000 ❶ ❷ ❸ ❹ ❺ ❻

❶ Type of actuation

1	2-position single 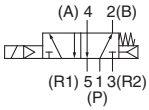
2	2-position double (Metal) 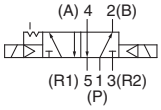
	2-position double (Rubber) 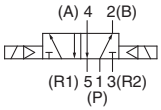
3	3-position closed center 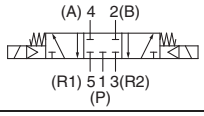
4	3-position exhaust center 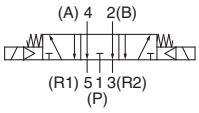
5	3-position pressure center 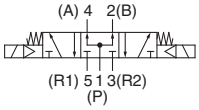
6	3-position double check 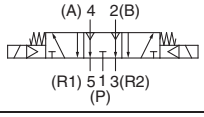

❷ Seal type

0	Metal seal
1	Rubber seal

❸ Function

Nil	Standard (1 W)
R	External pilot
Y Note 2)	Low wattage type (0.5 W)

Note 1) When two or more symbols are specified, indicate them alphabetically.
Note 2) Select "Y" when a valve is continuously energized for long periods of time.

❹ Coil voltage

5	24 VDC

❺ Light/surge voltage suppressor

Nil	Yes
E	Without light, with surge voltage suppressor

❻ Manual override

Nil: Non-locking push type (Tool required)

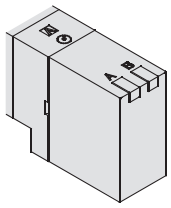

B: Locking type (Tool required)

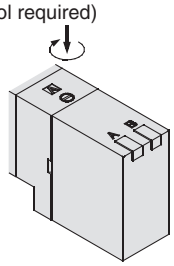

Refer to the SMC website or the VQC4000 series in Best Pneumatics No.1 for details on solenoid valve specifications, Common Precautions and Specific Product Precautions.

(mm)

VV5QC41
S Kit (Serial transmission kit: EX260)

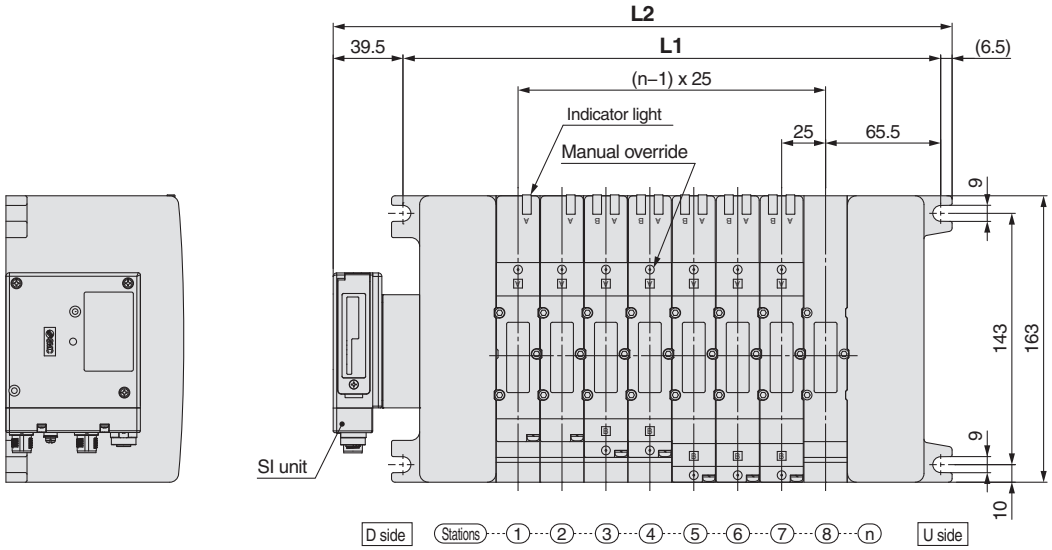

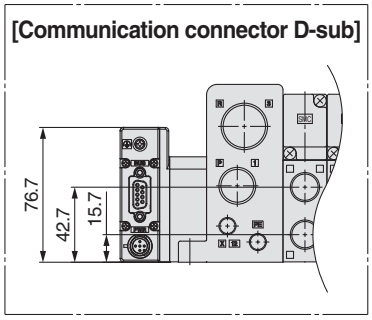

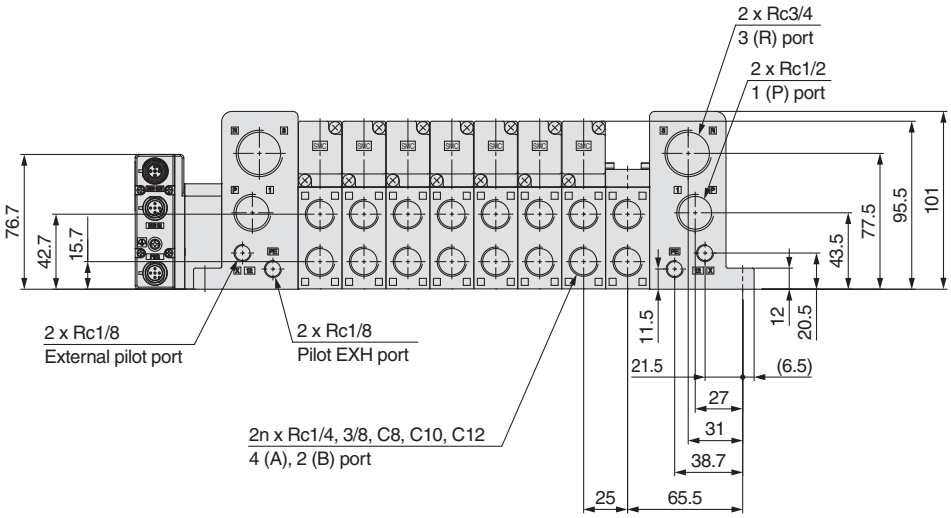

n: Stations (Maximum 16 stations)

L \ n	1	2	3	4	5	6	7	8	9	10	11	12	13	14	15	16
L1	131	156	181	206	231	256	281	306	331	356	381	406	431	456	481	506
L2	177	202	227	252	277	302	327	352	377	402	427	452	477	502	527	552

Plug-in Manifold Stacking Base S Kit (Serial Transmission): For EX260 Integrated-type (For Output) Serial Transmission System

Series S0700

CE
RoHS

How to Order Manifold

SS0750 – 08 C4 C8 SNA N – B

❶ ❷ ❸ ❹ ❺ ❻

❶ Stations

In the case of the 32-output SI unit

Symbol	Stations	Note
01	1 station	Double wiring Note 1)
⋮	⋮	
16	16 stations	
01	1 station	Specified layout Note 2) (Available up to 32 solenoids)
⋮	⋮	
24	24 stations	

In the case of the 16-output SI unit

Symbol	Stations	Note
01	1 station	Double wiring Note 1)
⋮	⋮	
08	8 stations	
01	1 station	Specified layout Note 2) (Available up to 16 solenoids)
⋮	⋮	
16	16 stations	

Note 1) Double wiring: single, double, 3-position and 4-position solenoid valves can be used on all manifold stations.
Use of a single solenoid will result in an unused control signal. If this is not desired, order with a specified layout.
Note 2) Specified layout: Indicate the wiring specifications on the manifold specification sheet.
(Note that 2-position double, 3-position and 4-position valves cannot be used where single wiring has been specified.)
Note 3) Includes the number of blanking plate assemblies.

❷ Cylinder port size

Symbol	Port size	
C2	With ø2 One-touch fitting	Metric
C3	With ø3.2 One-touch fitting	
C4	With ø4 One-touch fitting	
CM	Mixed sizes and with port plug Note)	
N1	With ø1/8" One-touch fitting	Inch
N3	With ø5/32" One-touch fitting	
NM	Mixed sizes and with port plug Note)	

Note) Indicate the sizes on the manifold specification sheet in the case of "CM", "NM".

❸ P, R port size

Symbol	Port size	
Nil	With ø8 One-touch fitting Note)	Metric
C6	With ø6 One-touch fitting	
C8	With ø8 One-touch fitting	
N7	With ø1/4" One-touch fitting	Inch
N9	With ø5/16" One-touch fitting	

Note) The cylinder port is ø5/16" when measured in inches.

❹ Kit type

Symbol	Protocol	Number of outputs	Communication connector
SD0	Without SI unit		
SQA	DeviceNet™	32	M12
SQB		16	
SNA	PROFIBUS DP	32	M12
SNB		16	
SNC		32	D-sub Note 1)
SND		16	
SVA	CC-Link	32	M12
SVB		16	
SDA	EtherCAT	32	M12
SDB		16	
SFA	PROFINET	32	M12
SFB		16	
SEA	EtherNet/IP™	32	M12
SEB		16	

Note 1) The maximum number of stations is determined by the total number of solenoids.
For mixed single and double wirings, enter "-K" to the order code options.
Note 2) For SI unit part number, refer to page 1.

Type of actuation	Single	Double, Dual 3-port
Number of solenoids	1	2

❺ SI unit output polarity

Nil	Positive common
N	Negative common

❻ Option

Symbol	Option
Nil	None
B Note 2)	With back pressure check valve (All stations)
D	With DIN rail (Rail length: Standard)
D0	Without DIN rail (With bracket)
D□ Note 3)	With DIN rail (Rail length specified, □: Stations)
K Note 4)	Special wiring specifications (Except double wiring)
N	With name plate
R Note 5)	External pilot
S	Built-in silencer

Note 1) When two or more options are specified, indicate them alphabetically.
Example) -BKN
Note 2) When the back pressure check valve is desired, and is to be installed only in certain manifold stations, specify the mounting position on the manifold specification sheet.
Note 3) The available number of stations is larger than the number of manifold stations.
Note 4) Indicate the wiring specifications for mixed single and double wirings.
Note 5) Refer to the S0700 series catalog (CAT.NAS11-88) for details.

- **Refer to the S0700 series catalog (CAT.NAS11-88) for manifold optional parts.**
- **Refer to the S0700 series catalog (CAT.NAS11-88) for manifold exploded view.**
- **When the "SD0" (Without SI unit) is specified, "-D", "-D□" cannot be selected.**

How to Order Manifold Assembly

Example (Serial transmission kit)

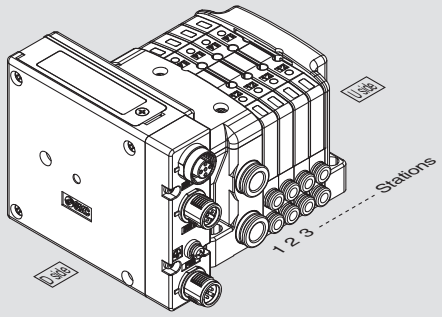

SS0750-04C4SNAN ···1 set – Manifold base part no.
∗S0720-5····· 4 sets – Valve part no. (Stations 1 to 4)
∗ Prefix the asterisk to the part nos. of the solenoid valve, etc.
Write sequentially from the 1st station on the D side.
When part nos. written collectively are complicated, specified on the manifold specification sheet.

- Specify the part numbers for valves and options together beneath the manifold base part number.

How to Order Valves

S07 [1] 0 [ ] – 5

Type of actuation

Symbol	Port size
1	2-position single
2	2-position double
A	4-position dual 3-port (N.C. + N.C.) [Exhaust center]
B	4-position dual 3-port (N.O. + N.O.) [Pressure center]
C	4-position dual 3-port (N.C. + N.O.)

Note) Refer to the S0700 series catalog (CAT.NAS11-88) for symbol.

Base mounted plug-in

Function

Symbol	Specification
Nil	Standard
R	External pilot Note)

Note) Not applicable for dual 3-port valves

Voltage: 24 VDC

Refer to the SMC website or the S0700 series catalog (CAT.NAS11-88) for details on solenoid valve specifications, Common Precautions and Specific Product Precautions.

Dimensions

(mm)

SS0750
S Kit (Serial transmission kit: EX260)

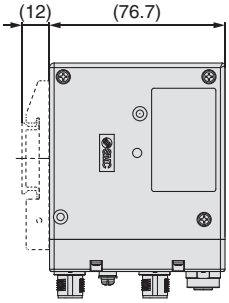

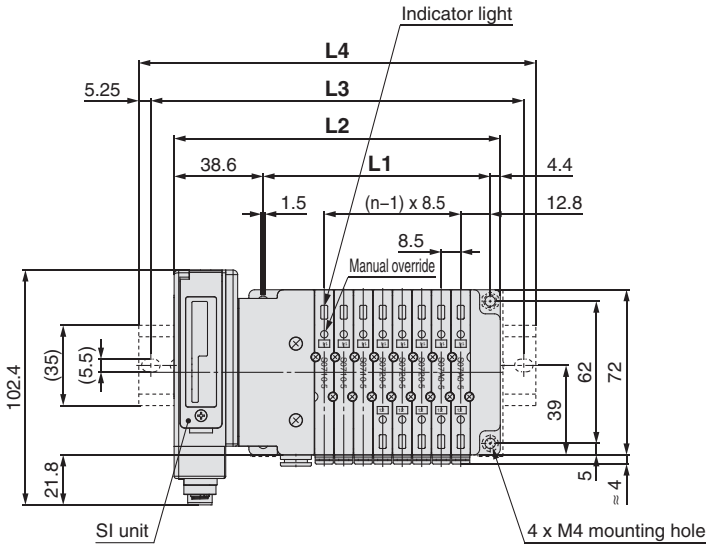

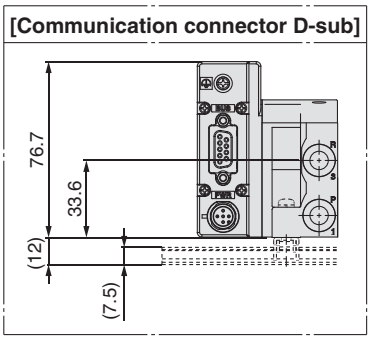

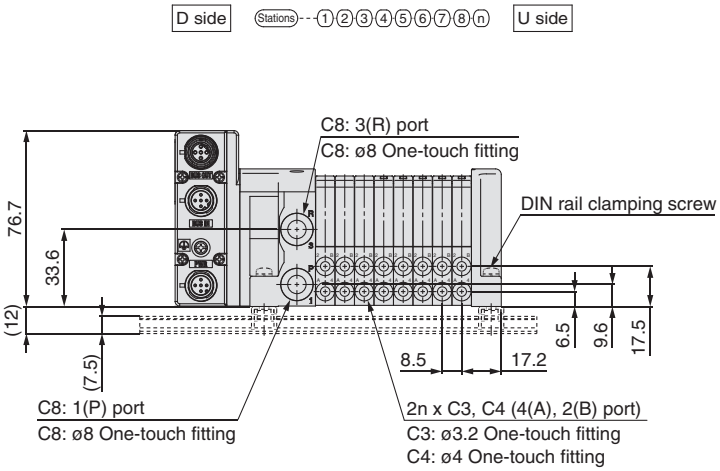

Dimensions

Formula L1 = 8.5n + 31, L2 = 8.5n + 74 n: Station (Maximun 16 stations)

L \ n	1	2	3	4	5	6	7	8	9	10	11	12	13	14	15	16
L1	39.5	48	56.5	65	73.5	82	90.5	99	107.5	116	124.5	133	141.5	150	158.5	167
L2	82.5	91	99.5	108	116.5	125	133.5	142	150.5	159	167.5	176	184.5	193	201.5	210
L3	112.5	112.5	125	137.5	137.5	150	162.5	162.5	175	187.5	187.5	200	212.5	212.5	225	237.5
L4	123	123	135.5	148	148	160.5	173	173	185.5	198	198	210.5	223	223	235.5	248

Specific Product Precautions 1

Be sure to read before handling. Refer to back cover for Safety Instructions, "Handling Precautions for SMC Products" (M-E03-3) and "Operation Manual" for 3/4/5 Port Solenoid Valve Precautions. The Operation Manual can be downloaded from the SMC website, http://www.smcworld.com

Design/Selection

⚠ Warning

1. Use this product within the specification range.

Using beyond the specified specifications range can cause fire, malfunction, or damage to the system.
Check the specifications before operation.

2. When using for an interlock circuit:

- **Provide a multiple interlock system which is operated by another system (such as mechanical protection function).**
- **Perform an inspection to confirm that it is working properly.**

This may cause possible injury due to malfunction.

⚠ Caution

1. When applicable to UL, use a Class 2 power supply unit conforming to UL1310 for direct current power supply.

2. Use this product within the specified voltage range.

Using beyond the specified voltage range is likely to cause the units and connecting devices to be damaged or to malfunction.

3. Do not install a unit in a place where it can be used as a foothold.

Applying any excessive load such as stepping on the unit by mistake or placing a foot on it, will cause it to break.

4. Keep the surrounding space free for maintenance.

When designing a system, take into consideration the amount of free space needed for performing maintenance.

5. Do not remove the name plate.

Improper maintenance or incorrect use of operation manual can cause failure and malfunction. Also, there is a risk of losing conformity with safety standards.

Mounting

⚠ Caution

1. When handling and assembling units:

- **Do not apply excessive force to the unit when disassembling.**

  The connecting portions of the unit are firmly joined with seals.
- **When joining units, take care not to get fingers caught between units.**

  Injury can result.

2. Do not drop, bump, or apply excessive impact.

Otherwise, the unit can become damaged, malfunction, or fail to function.

3. Observe the tightening torque range.

Tightening outside of the allowable torque range will likely damage the screw.

IP67 cannot be guaranteed if the screws are not tightened to the specified torque.

Mounting

⚠ Caution

4. When lifting a large size manifold solenoid valve unit, take care to avoid causing stress to the valve connection joint.

The connection parts of the unit may be damaged. Because the unit may be heavy, carrying and installation should be performed by more than one operator to avoid strain or injury.

5. When placing a manifold, mount it on a flat surface.

Torsion in the whole manifold can lead to trouble such as air leakage or defective insulation.

Wiring

⚠ Caution

1. Check the grounding to maintain the safety of the reduced wiring system and for anti-noise performance.

Provide a specific grounding as close to the unit as possible to minimize the distance to grounding.

2. Avoid repeatedly bending or stretching the cable and applying a heavy object or force to it.

Wiring applying repeated bending and tensile stress to the cable can break the circuit.

3. Avoid miswiring.

If miswired, there is a danger of malfunction or damage to the reduced wiring system.

4. Do not wire while energizing the product.

There is a danger of malfunction or damage to the reduced wiring system or output device.

5. Avoid wiring the power line and high pressure line in parallel.

Noise or surge produced by signal line resulting from the power line or high pressure line could cause malfunction.Wiring of the reduced wiring system or output device and the power line or high pressure line should be separated from each other.

6. Check the wiring insulation.

Defective insulation (contact with other circuits, improper insulation between terminals, etc.) may cause damage to the reduced wiring system or output device due to excessive voltage and current.

7. When a reduced wiring system is installed in machinery/equipment, provide adequate protection against noise by using noise filters, etc.

Noise in signal lines may cause malfunction.

Specific Product Precautions 2

Be sure to read before handling. Refer to back cover for Safety Instructions, "Handling Precautions for SMC Products" (M-E03-3) and "Operation Manual" for 3/4/5 Port Solenoid Valve Precautions. The Operation Manual can be downloaded from the SMC website, http://www.smcworld.com

Wiring

⚠ Caution

8. When connecting wires of output device, prevent water, solvent or oil from entering inside the connector section.

This can cause damage, equipment failure or malfunction.

9. Avoid wiring patterns in which excessive stress is applied to the connector.

This may cause malfunction or damage to the unit due to contact failure.

10. Select connectors that are ø16 or less if mounting manifolds directly using fieldwireable connectors for SI unit power supply wiring.

Using large diameter connectors causes interference with the mounting surface.

The following cables with connectors are recommended.

■ **For EX260-SPR□/-SDN□/-SEC□/-SPN□/-SEN□**

<Cable with connector>

- EX500-AP□□□-□
- PCA-1401804/-1401805/-1401806

■ **For EX260-SMJ□**

<Cable with connector>

- EX9-AC□□□-1
- PCA-1401807/-1401808/-1401809

Operating Environment

⚠ Warning

1. Do not use in an atmosphere containing an inflammable gas or explosive gas.

Use in such an atmosphere is likely to cause a fire or explosion. This system is not explosion-proof.

⚠ Caution

1. Select the proper type of enclosure according to the environment of operation.

IP67 is achieved when the following conditions are met.

1) Provide appropriate wiring between all units using electrical wiring cables, communication connectors and cables with M12 connectors.
2) Suitable mounting of each unit and manifold valve.
3) Be sure to mount a seal cap on any unused connectors.

If using in an environment that is exposed to water splashes, please take measures such as using a cover.

When the enclosure is IP40, do not use in an operating environment or atmosphere where it may come in contact with corrosive gas, chemical agents, seawater, water, or water vapor.

When connected to the EX260-SPR5/6/7/8, manifold enclosure is IP40.

Operating Environment

⚠ Caution

2. Provide adequate protection when operating in locations such as the following.

Failure to do so may cause damage or malfunction.

The effect of countermeasures should be checked in individual equipment and machine.

1) Where noise is generated by static electricity, etc.
2) Where there is a strong electric field
3) Where there is a danger of exposure to radiation
4) When in close proximity to power lines or high voltage lines

3. Do not use in an environment where oil and chemicals are used.

Operating in environments with coolants, cleaning solvents, various oils or chemicals may cause adverse effects (damage, malfunction) to the unit even in a short period of time.

4. Do not use in an environment where the product could be exposed to corrosive gas or liquid.

This may damage the unit and cause it to malfunction.

5. Do not use in locations with sources of surge generation.

Installation of the unit in an area around the equipment (electromagnetic lifters, high frequency induction furnaces, welding machine, motors, etc.), which generates the large surge voltage could cause to deteriorate an internal circuitry element of the unit or result in damage. Implement countermeasures against the surge from the generating source, and avoid touching the lines with each other.

6. The product is CE marked, but not immune to lightning strikes. Take measures against lightning strikes in your system.

7. Keep dust, wire scraps and other extraneous material from getting inside the product.

This may cause malfunction or damage.

8. Mount the unit in such locations, where no vibration or shock is affected.

This may cause malfunction or damage.

9. Do not use in places where there are cyclic temperature changes.

In case that the cyclic temperature is beyond normal temperature changes, the internal unit is likely to be adversely effec-ted.

10. Do not use in direct sunlight.

Do not use in direct sunlight. It may cause malfunction or damage.

11. Use this product within the specified ambient temperature range.

This may cause malfunction.

12. Do not use in places where there is radiated heat around it.

Such a place is likely to cause malfunction.

Specific Product Precautions 3

Be sure to read before handling. Refer to back cover for Safety Instructions, "Handling Precautions for SMC Products" (M-E03-3) and "Operation Manual" for 3/4/5 Port Solenoid Valve Precautions. The Operation Manual can be downloaded from the SMC website, http://www.smcworld.com

Adjustment/Operation

⚠ Warning

1. Do not perform operation or setting with wet hands.

There is a risk of electrical shock.

⚠ Caution

1. Use a watchmakers' screwdriver with thin blade for the setting of each switch of the SI unit.
When setting the switch, do not touch other unrelated parts.

This may cause parts damage or malfunction due to a short circuit.

2. Provide adequate setting for the operating conditions.

Failure to do so could result in malfunction.
Refer to the operation manual for setting of the switches.

3. For details on programming and address setting, refer to the manual from the PLC manufacturer.

The content of programming related to protocol is designed by the manufacturer of the PLC used.

4. For the EX260-SPN□, the side of the SI unit may become hot.

It may cause burns.

Maintenance

⚠ Warning

1. Do not disassemble, modify (including circuit board replacement) or repair this product.

Such actions are likely to cause injuries or breakage.

2. When an inspection is performed,
- **Turn off the power supply.**
- **Stop the air supply, exhaust the residual pressurein piping and verify that the air is released before performing maintenance work.**

Unexpected malfunction of system components and injury can result.

⚠ Caution

1. When handling and replacing the unit:
- **Do not apply excessive force to the unit when disassembling.**

  The connecting portions of the unit are firmly joined with seals.
- **When joining units, take care not to get fingers caught between units.**

  Injury can result.

2. Perform periodic inspection.

Unexpected malfunction in the system composition devices is likely to occur due to malfunction of machinery or equipment.

3. After maintenance, make sure to perform an appropriate functionality inspection.

In cases of abnormality such as faulty operation, stop operation. Unexpected malfunction in the system composition devices is likely to occur.

4. Do not use benzene and thinner for cleaning units.

Damage to the surface or erasure of the display can result.
Wipe off any stains with a soft cloth.
If the stain is persistent, wipe off with a cloth soaked in a dilute solution of neutral detergent and wrung out tightly, and then finish with a dry cloth.

Other

⚠ Caution

1. Refer to the catalog of each series for Common Precautions and Specific Product Precautions on manifold solenoid valves.

⚠ Safety Instructions

These safety instructions are intended to prevent hazardous situations and/or equipment damage. These instructions indicate the level of potential hazard with the labels of **"Caution," "Warning"** or **"Danger."** They are all important notes for safety and must be followed in addition to International Standards (ISO/IEC)*1), and other safety regulations.

⚠ Caution: **Caution** indicates a hazard with a low level of risk which, if not avoided, could result in minor or moderate injury.

⚠ Warning: **Warning** indicates a hazard with a medium level of risk which, if not avoided, could result in death or serious injury.

⚠ Danger : **Danger** indicates a hazard with a high level of risk which, if not avoided, will result in death or serious injury.

*1) ISO 4414: Pneumatic fluid power – General rules relating to systems.
ISO 4413: Hydraulic fluid power – General rules relating to systems.
IEC 60204-1: Safety of machinery – Electrical equipment of machines.
(Part 1: General requirements)
ISO 10218-1: Manipulating industrial robots - Safety.
etc.

⚠ Warning

1. **The compatibility of the product is the responsibility of the person who designs the equipment or decides its specifications.**
   Since the product specified here is used under various operating conditions, its compatibility with specific equipment must be decided by the person who designs the equipment or decides its specifications based on necessary analysis and test results. The expected performance and safety assurance of the equipment will be the responsibility of the person who has determined its compatibility with the product. This person should also continuously review all specifications of the product referring to its latest catalog information, with a view to giving due consideration to any possibility of equipment failure when configuring the equipment.
2. **Only personnel with appropriate training should operate machinery and equipment.**
   The product specified here may become unsafe if handled incorrectly. The assembly, operation and maintenance of machines or equipment including our products must be performed by an operator who is appropriately trained and experienced.
3. **Do not service or attempt to remove product and machinery/equipment until safety is confirmed.**
   1. The inspection and maintenance of machinery/equipment should only be performed after measures to prevent falling or runaway of the driven objects have been confirmed.
   2. When the product is to be removed, confirm that the safety measures as mentioned above are implemented and the power from any appropriate source is cut, and read and understand the specific product precautions of all relevant products carefully.
   3. Before machinery/equipment is restarted, take measures to prevent unexpected operation and malfunction.
4. **Contact SMC beforehand and take special consideration of safety measures if the product is to be used in any of the following conditions.**
   1. Conditions and environments outside of the given specifications, or use outdoors or in a place exposed to direct sunlight.
   2. Installation on equipment in conjunction with atomic energy, railways, air navigation, space, shipping, vehicles, military, medical treatment, combustion and recreation, or equipment in contact with food and beverages, emergency stop circuits, clutch and brake circuits in press applications, safety equipment or other applications unsuitable for the standard specifications described in the product catalog.
   3. An application which could have negative effects on people, property, or animals requiring special safety analysis.
   4. Use in an interlock circuit, which requires the provision of double interlock for possible failure by using a mechanical protective function, and periodical checks to confirm proper operation.

⚠ Caution

1. **The product is provided for use in manufacturing industries.**
   The product herein described is basically provided for peaceful use in manufacturing industries.
   If considering using the product in other industries, consult SMC beforehand and exchange specifications or a contract if necessary.
   If anything is unclear, contact your nearest sales branch.

Limited warranty and Disclaimer/ Compliance Requirements

The product used is subject to the following "Limited warranty and Disclaimer" and "Compliance Requirements".
Read and accept them before using the product.

Limited warranty and Disclaimer

1. The warranty period of the product is 1 year in service or 1.5 years after the product is delivered.*2)
   Also, the product may have specified durability, running distance or replacement parts. Please consult your nearest sales branch.
2. For any failure or damage reported within the warranty period which is clearly our responsibility, a replacement product or necessary parts will be provided.
   This limited warranty applies only to our product independently, and not to any other damage incurred due to the failure of the product.
3. Prior to using SMC products, please read and understand the warranty terms and disclaimers noted in the specified catalog for the particular products.

*2) **Vacuum pads are excluded from this 1 year warranty.**
A vacuum pad is a consumable part, so it is warranted for a year after it is delivered.
Also, even within the warranty period, the wear of a product due to the use of the vacuum pad or failure due to the deterioration of rubber material are not covered by the limited warranty.

Compliance Requirements

1. The use of SMC products with production equipment for the manufacture of weapons of mass destruction (WMD) or any other weapon is strictly prohibited.
2. The exports of SMC products or technology from one country to another are governed by the relevant security laws and regulations of the countries involved in the transaction. Prior to the shipment of a SMC product to another country, assure that all local rules governing that export are known and followed.

Revision history	
Edition B	• EtherNet/IP™ added to applicable Fieldbus protocols.
	QS

⚠ Safety Instructions	Be sure to read "Handling Precautions for SMC Products" (M-E03-3) before using.

Global Manufacturing, Distribution and Service Network

Worldwide Subsidiaries

North & South America

- U.S.A. **SMC Corporation of America**
- CANADA **SMC Pneumatics (Canada) Ltd.**
- MEXICO **SMC Corporation(México), S.A. de C.V.**
- BRAZIL **SMC Pneumãticos do Brasil Ltda.**
- CHILE **SMC Pneumatics (Chile) S.A.**
- COLOMBIA **SMC Colombia Sucursal de SMC Chile S.A.**
- ARGENTINA **SMC Argentina S.A.**
- BOLIVIA **SMC Pneumatics Bolivia S.r.l.**
- VENEZUELA **SMC Neumatica Venezuela S.A.**
- PERU (Distributor) **IMPECO Automatización Industrial S.A.C.**
- ECUADOR (Distributor) **ASSISTECH CIA. LTDA.**

Asia/Oceania

- CHINA **SMC(China)Co.,Ltd.**
- CHINA **SMC Pneumatics (Guangzhou) Ltd.**
- HONG KONG **SMC Pneumatics(Hong Kong)Ltd.**
- TAIWAN **SMC Pneumatics(Taiwan)Co.,Ltd.**
- KOREA **SMC Pneumatics Korea Co., Ltd.**
- SINGAPORE **SMC Pneumatics(S.E.A.)Pte.Ltd.**
- MALAYSIA **SMC Pneumatics(S.E.A.)Sdn.Bhd.**
- THAILAND **SMC (Thailand) Ltd.**
- PHILIPPINES **Shoketsu SMC Corporation**
- INDIA **SMC Pneumatics(India)Pvt.Ltd.**
- ISRAEL (Distributor) **Baccara Geva A.C.S. Ltd.**
- INDONESIA (Distributor) **PT. Sinar Mutiara Cemerlang**
- VIETNAM (Distributor) **Dy Dan Trading Co.,Ltd.**
- PAKISTAN (Distributor) **Jubilee Corporation**

Asia/Oceania

- SRI LANKA (Distributor) **Electro-Serv(Pvt.)Ltd.**
- IRAN (Distributor) **Abzarchian Co. Ltd.**
- U.A.E. (Distributor) **Machinery People Trading Co. L.L.C.**
- KUWAIT (Distributor) **Esco Kuwait Equip & Petroleum App. Est.**
- SAUDI ARABIA (Distributor) **Assaggaff Trading Est.**
- BAHRAIN (Distributor) **Mohammed Jalal & Sons W.L.L. Technical & Automative Services**
- SYRIA (Distributor) **Miak Corporation**
- JORDAN (Distributor) **Atafawok Trading Est.**
- BANGLADESH (Distributor) **Chemie International**
- AUSTRALIA **SMC Pneumatics(Australia)Pty.Ltd.**
- NEW ZEALAND **SMC Pneumatics(N.Z.)Ltd.**
- JAPAN **SMC Corporation**

Europe/Africa

- GERMANY **SMC Pneumatik GmbH**
- SWITZERLAND **SMC Pneumatik AG**
- U.K. **SMC Pneumatics (U.K.) Ltd.**
- FRANCE **SMC Pneumatique SA**
- SPAIN / PORTUGAL **SMC España S.A.**
- ITALY **SMC Italia S.p.A.**
- GREECE **SMC HELLAS E.P.E**
- IRELAND **SMC Pneumatics (Ireland) Ltd.**
- NETHERLANDS (Associated company) **SMC Pneumatics BV**
- BELGIUM (Associated company) **SMC Pneumatics N.V./S.A.**
- DENMARK **SMC Pneumatik A/S**
- AUSTRIA **SMC Pneumatik GmbH (Austria)**

Europe/Africa

- CZECH REPUBLIC **SMC Industrial Automation CZ s.r.o.**
- HUNGARY **SMC Hungary Ipari Automatizálási Kft.**
- POLAND **SMC Industrial Automation Polska Sp. z o.o.**
- SLOVAKIA **SMC Priemyselná Automatizácia Spol s.r.o.**
- SLOVENIA **SMC Industrijska Avtomatika d.o.o.**
- BULGARIA **SMC Industrial Automation Bulgaria EOOD**
- CROATIA **SMC Industrijska Automatika d.o.o.**
- BOSNIA AND HERZEGOVINA(Distributor) **A.M. Pneumatik d.o.o.**
- SERBIA(Distributor) **Best Pneumatics d.o.o.**
- UKRAINE(Distributor) **PNEUMOTEC Corp.**
- FINLAND **SMC Pneumatics Finland Oy**
- NORWAY **SMC Pneumatics Norway AS**
- SWEDEN **SMC Pneumatics Sweden AB**
- ESTONIA **SMC Pneumatics Estonia Oü**
- LATVIA **SMC Pneumatics Latvia SIA**
- LITHUANIA(LIETUVA) **UAB "SMC Pneumatics"**
- ROMANIA **SMC Romania S.r.l.**
- RUSSIA **SMC Pneumatik LLC.**
- KAZAKHSTAN **SMC Kazakhstan, LLC.**
- TURKEY (Distributor) **Entek Pnömatik Sanayi ve. Ticaret Şirketi**
- MOROCCO (Distributor) **Soraflex**
- TUNISIA (Distributor) **Byms**
- EGYPT (Distributor) **Saadani Trading & Industrial Services**
- NIGERIA (Distributor) **Faraday Engineering Company Ltd.**
- SOUTH AFRICA (Distributor) **Hyflo Southern Africa (Pty.) Ltd.**

U.S. & Canadian Sales Offices

WEST

- Austin
- Dallas
- Los Angeles
- Phoenix
- Portland
- San Francisco
- Vancouver

CENTRAL

- Chicago
- Cincinnati
- Cleveland
- Detroit
- Indianapolis
- Milwaukee
- Minneapolis
- St. Louis
- Toronto
- Windsor

EAST

- Atlanta
- Birmingham
- Boston
- Charlotte
- Nashville
- New Jersey
- Richmond
- Rochester
- Tampa
- Montreal

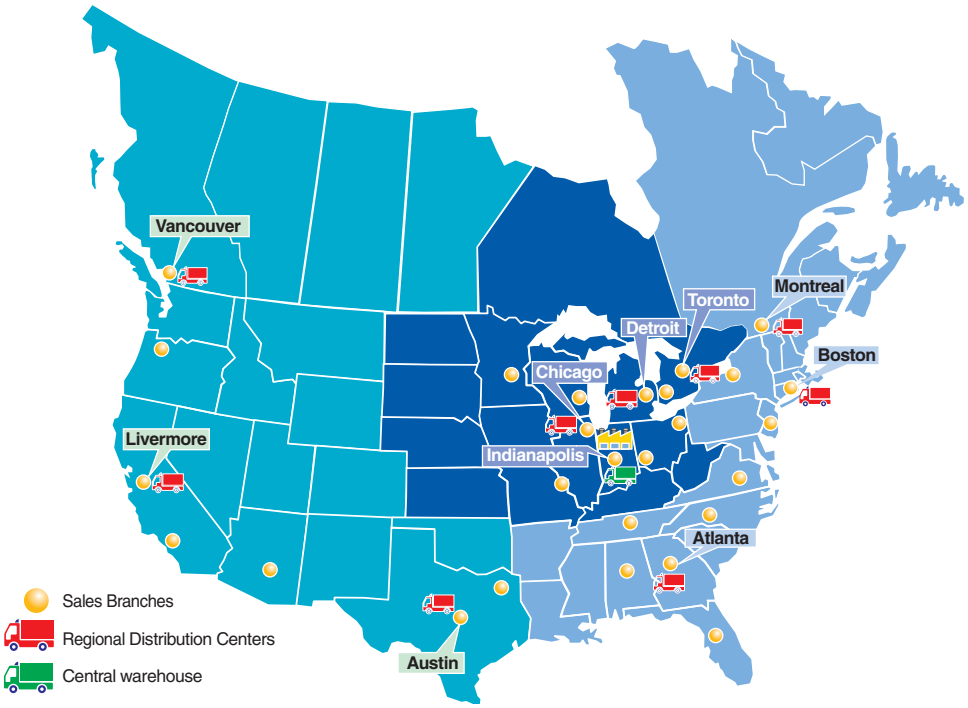

SMC Corporation of America
10100 SMC Blvd., Noblesville, IN 46060
www.smcusa.com
SMC Pneumatics (Canada) Ltd.
www.smcpneumatics.ca

(800) SMC.SMC1 (762-7621)
e-mail: sales@smcusa.com
For International inquiries: www.smcworld.com

QT-RRD-5M