Actuator / Accessory

Actuator

Description	Part No. (Ordering Part No.)	Package Quantity	Remarks
Straight with rubber bushings	HS9Z-A11T	1	Actuator retention force is Fzh=5,000N.
Right-angle with rubber bushings	HS9Z-A12T	1	
Angle adjustable	HS9Z-A15T	1	

• Above actuators can only be used for HS1T. Do not used on other models.

Note) Use dedicated actuators only. When other actuators are used, the interlock switch may be damaged.

Accessory

Description	Part No. (Ordering Part No.)	Package Quantity	Remarks
Manual Unlock Key (long)	HS9Z-T3	1	Material: Plastic (Used if the HS1T is installed far inside the equipment to reach to the manual lock.)

Interlock Switch Dimensions and Mounting Hole Layouts

All dimensions in mm

Actuator

Straight with rubber bushings
HS9Z-A11T

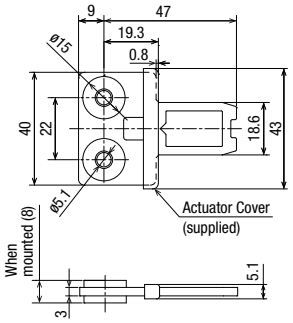

Right-angle with rubber bushings
HS9Z-A12T

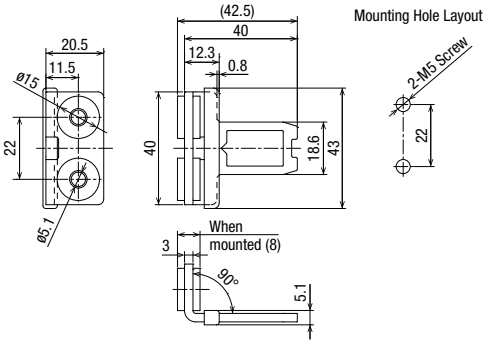

Accessory

Manual Unlock Key (long) (Plastic)
HS9Z-T3

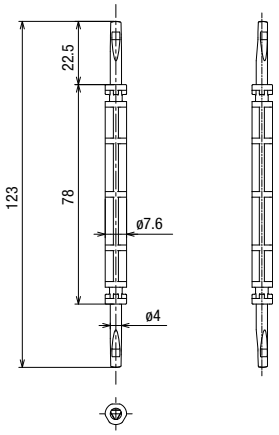

Angle adjustable
HS9Z-A15T

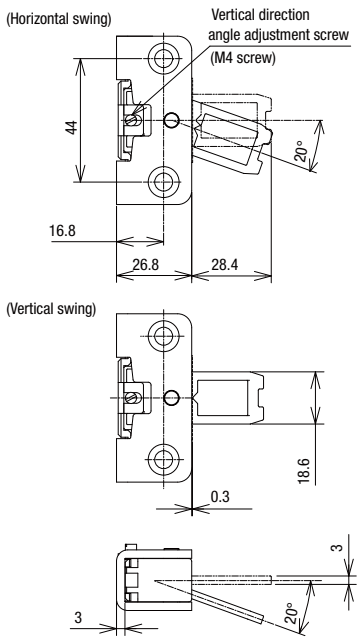

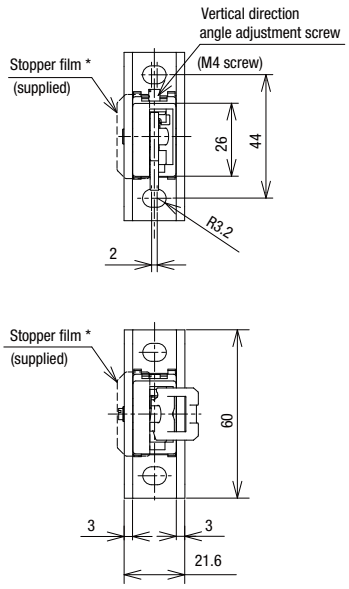

Mounting Hole Layout

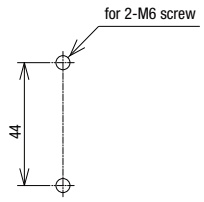

* A stopper film is used for positioning the actuator.
After positioning is complete, remove the film.