Product data sheet
Characteristics

ILE2E661PB1A2
brushless dc motor 24..48 V - EtherCAT interface - L = 174 mm - 38:1

Product availability: Non-Stock - Not normally stocked in distribution facility

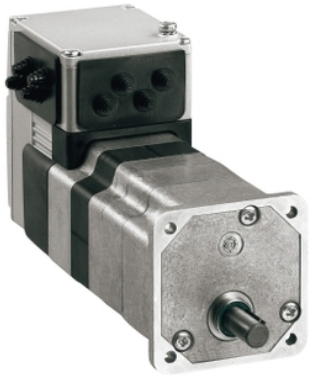

Main

Range of product	Lexium integrated drive
Product or component type	Motion integrated drive
Device short name	ILE
Motor type	Brushless dc motor
Number of motor poles	6
Phase	Single phase
[Us] rated supply voltage	48 V 24 V
Network type	DC
Communication interface	EtherCAT, integrated
Length	6.85 in (174 mm)
Winding type	Medium speed of rotation and medium torque
Electrical connection	Printed circuit board connector
Holding brake	Without
Gear box type	Straight teeth gear, 3 stages
Reduction ratio	38:1 (75:2)
Nominal speed	107 rpm 24 V 133 rpm 48 V
Nominal torque	64.61 Lbf.In (7.3 N.m) 24 V 64.61 lbf.in (7.3 N.m) 48 V

Complementary

Transmission rate	100 Mbits
Mounting support	Flange
Motor flange size	2.60 in (66 mm)
Number of motor stacks	1
Centring collar diameter	0.63 in (16 mm)
Centring collar depth	0.16 in (4 mm)
Number of mounting holes	4
Mounting holes diameter	0.17 in (4.4 mm)
Circle diameter of the mounting holes	2.90 in (73.54 mm)
Feedback type	BLDC encoder
Shaft end	Keyed
Second shaft	Without second shaft end
Shaft diameter	0.39 in (10 mm)
Shaft length	0.98 in (25 mm)
Key width	0.63 in (16 mm)
Supply voltage limits	18…55.2 V
Current consumption	7000 mA peak 5500 mA maximum continuous
Associated fuse rating	16 A
Commissioning interface	RS485 Modbus TCP 9.6, 19.2 and 38.4 kbauds)
Input/output type	4 signals (each be used as input or output)
Voltage state 0 guaranteed	-3...4.5 V
Voltage state 1 guaranteed	15...30 V

The information provided in this documentation contains general descriptions and/or technical characteristics of the performance of the products contained herein.
This documentation is not intended as a substitute for and is not to be used for determining suitability or reliability of these products for specific user applications.
It is the duty of any such user or integrator to perform the appropriate and complete risk analysis, evaluation and testing of the products with respect to the relevant specific application or use thereof.
Neither Schneider Electric Industries SAS nor any of its affiliates or subsidiaries shall be responsible or liable for misuse of the information contained herein.

Discrete input current	10 MA at 24 V on/STO_A safety input 3 MA at 24 V on/STO_B safety input 2 mA at 24 V 24 V signal interface
Discrete output voltage	23...25 V
Maximum switching current	100 MA per output 200 mA total
Protection type	Safe torque off Short circuit of the output voltage Overload of output voltage
Maximum supply current	0.1 A power stage disabled) 6.8 A 24 V 3.8 A 48 V
Nominal output power	119 W 48 V 95 W 24 V
Peak stall torque	115.68 Lbf.In (13.07 N.m) 24 V 115.68 lbf.in (13.07 N.m) 48 V
Continuous stall torque	73.46 lbf.in (8.3 N.m)
Detent torque	26.55 lbf.in (3 N.m)
Speed feedback resolution	12 points/turn motor 0.8° gearbox output
Accuracy error	+/- 0.5 point
Maximum torsional backlash	1 °
Rotor inertia	211 kg.cm²
Maximum mechanical speed	133 rpm
Maximum radial force Fr	200 N long-term operation) 200 N short-term operation)
Maximum axial force Fa	10 N long-term operation) 80 N short-term operation)
Service life in hours	2500 H bearing short-term operation 15000 h bearing long-term operation
Marking	CE
Type of cooling	Natural convection
Net weight	4.08 lb(US) (1.85 kg)

Environment

Standards	IEC 61800-3, Ed 2 EN 50347 EN 61800-3 : 2001-02 EN 61800-3:2001, second environment IEC 60072-1 EN/IEC 50178 EN/IEC 61800-3
Product certifications	CUL TÜV UL
Ambient air temperature for operation	104…131 °F (40…55 °C) with power derating of 2 % per °C) 32…104 °F (0…40 °C) without)
Permissible ambient air temperature around the device	221 °F (105 °C) power amplifier 230 °F (110 °C) motor
Ambient air temperature for storage	-13…158 °F (-25…70 °C)
Operating altitude	<= 3280.84 ft (1000 m) without
Relative humidity	15…85 % without condensation
Vibration resistance	20 m/s² 10…500 Hz) 10 cycles EN/IEC 60068-2-6
Shock resistance	150 m/s² 1000 shocks EN/IEC 60068-2-29
IP degree of protection	Shaft bushing IP41 EN/IEC 60034-5 Total except shaft bushing IP54 EN/IEC 60034-5

Ordering and shipping details

Category	18288 - LEXIUM INTEGRATED DRIVES II
Discount Schedule	PC56
GTIN	03606485188812
Package weight(Lbs)	2.30 kg (5.06 lb(US))
Returnability	No
Country of origin	DE

Offer Sustainability

Sustainable offer status	Green Premium product
REACh Regulation	REACh Declaration
EU RoHS Directive	Pro-active compliance (Product out of EU RoHS legal scope) EU RoHS Declaration
Mercury free	Yes
RoHS exemption information	Yes
China RoHS Regulation	China RoHS Declaration
Environmental Disclosure	Product Environmental Profile
Circularity Profile	End Of Life Information
WEEE	The product must be disposed on European Union markets following specific waste collection and never end up in rubbish bins.

Contractual warranty

Warranty	18 months

ILE2E661PB1A2

Integrated Drive with Straight Teeth Gear

Dimensions

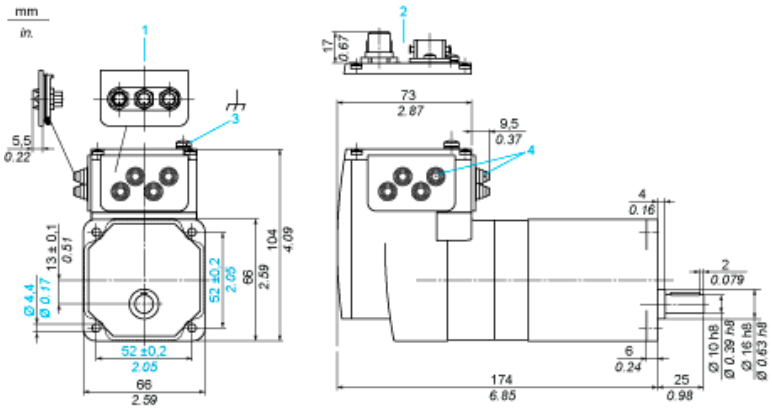

1 Accessories: I/O signal insert with industrial connectors
2 Option: industrial connectors
3 Earth (ground) terminal
4 Accessories: cable entries Ø = 3 ... 9 mm/0.12 ... 0.35 in.

ILE2E661PB1A2

Connection Example with 4 I/O Signals

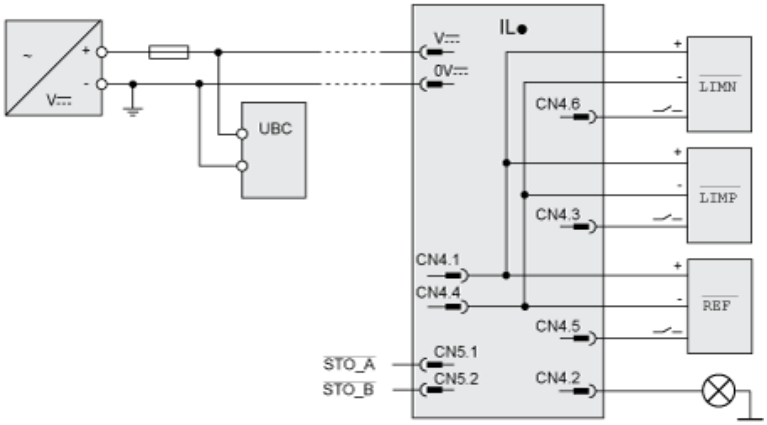

ILE2E661PB1A2

Torque Characteristics

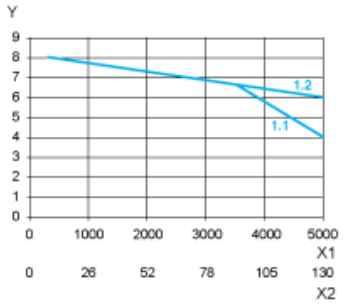

X1 Speed of rotation of motor in rpm
X2 Speed of rotation of gearing in rpm
Y Torque in Nm
1.1 Max. torque at 24 V
1.2 Max. torque at 36 V