Illuminated Pushbuttons (Assembled)

Part No. LBW①L-②③T④⑤⑥∗

Flush

Round / Black Bezel | Square / Black Bezel | Round / Metallic Bezel | Square / Metallic Bezel | Round with Guard | Square with Guard

Extended

(black bezel is also available)

Flush Ring-illuminated

(black bezel is also available)

① Style	② Operation	④ Contact	⑤ LED Operating Voltage	Part No.	∗ Illumination Color Code
Black bezel	Momentary	Gold/SPDT	24V AC/DC	LBW①L-M③T14*	Specify the color code in place of ∗ in the Part No. A: amber G: green PW: pure white R: red S: blue Y: yellow
		Gold/DPDT		LBW①L-M③T24*	
	Maintained	Gold/SPDT	24V AC/DC	LBW①L-A③T14*	
		Gold/DPDT		LBW①L-A③T24*	
Metallic bezel	Momentary	Gold/SPDT	24V AC/DC	LBW①L-M③T14*	
		Gold/DPDT		LBW①L-M③T24*	
	Maintained	Gold/SPDT	24V AC/DC	LBW①L-A③T14*	
		Gold/DPDT		LBW①L-A③T24*	
Guard Type	Momentary	Gold/SPDT	24V AC/DC	LBW①L-M③T14*	
		Gold/DPDT		LBW①L-M③T24*	
	Maintained	Gold/SPDT	24V AC/DC	LBW①L-A③T14*	
		Gold/DPDT		LBW①L-A③T24*	

- Flush/Extended color code: A (amber), G (green), PW (pure white), R (red), S (blue), Y (yellow)
- Ring-illuminated color code: PW (pure white), WA (amber), WG (green), WR (red), WS (blue)
- Illuminated pushbuttons contain an LED unit. For details on LED units, see 580.
- The guard opens 180 degrees spring-return.
- Illuminated pushbuttons can be used with legend markings. Engraving can be done on a marking plate which is placed in the lens, or a clear film can be printed and placed in the lens. See 594 for details on the marking plate and film.
- White lens type (when light is off) are available. Clear lens is used instead of colored lens for amber, green, red, and blue illuminated pushbuttons. Amber, green, red, or blue LED units are used. To specify, see Part Number Interpretation below.
- PC board terminals available for gold contacts. Silver contacts also available. To specify, see Part Number Interpretation below.
- Extended style is available. See Part Number Interpretation below (③).
- Flush ring-illuminated style is available. See Part Number Interpretation below (③). Guard is not available with flush ring-illuminated style.
- 5V DC and 12V AC/DC LED operating voltages also available.
- Marking plates are available. See accessory section.

Part Number Interpretation

LBW①L-②③T④⑤⑥∗

To be used for interpreting part numbers only, not for part number development.

① Style

Code	Shape
6	Round / Black Bezel
7	Square / Black Bezel
6M	Round / Metallic Bezel
7M	Square / Metallic Bezel
6G	Round with Guard
7G	Square with Guard

② Operation

Code	Operation
A	Maintained
M	Momentary

③ Operator Style

Code	Operator Style
1	Flush
2	Extended
1R	Flush Ring-illuminated

* Extended style is available only for round (black/metallic bezel) and in momentary operation. Guard model is not available.

④ Contacts

Code	Contact
1	Gold/SPDT
2	Gold/DPDT
5	Silver/SPDT
6	Silver/DPDT

⑤ LED Operating Voltage

Code	Rated Operating Voltage
1	5V DC
3	12V AC/DC
4	24V AC/DC

⑥ Others

Code	Specification	Part No. Example
Blank	Solder/Tab Terminal	—
V	PC Board Terminal (Gold Contact Only)	LBW6L-M1T14V∗

- Specify the color code in place of ∗ in the table above.

Illuminated Pushbuttons (Sub-assembled)

Contact Block		Operator		LED Module		Lens		Completed Unit
	+		+		+		=	

Contact Block

Terminal Style		Material	Contact	Part Number
	Solder/Tab	Silver	SPDT	LB-T50
			DPDT	LB-T60
	PCB	Gold	SPDT	LB-T10V
			DPDT	LB-T20V

LED Module

Style	Color	Voltage	Part Number
	Amber	5V	LB9Z-LED5A
		12V	LB9Z-LED1A
		24V	LB9Z-LED2A
	Green	5V	LB9Z-LED5G
		12V	LB9Z-LED1G
		24V	LB9Z-LED2G
	Red	5V	LB9Z-LED5R
		12V	LB9Z-LED1R
		24V	LB9Z-LED2R
	Blue	5V	LB9Z-LED5S
		12V	LB9Z-LED1S
		24V	LB9Z-LED2S
	Pure White	5V	LB9Z-LED5PW
		12V	LB9Z-LED1PW
		24V	LB9Z-LED2PW

Operator

Style	Mounting Style	Shape	Momentary	Maintained
	Flush Mount (Plastic)	Round	LBW6L-M0	LBW6L-A0
		Square	LBW7L-M0	LBW7L-A0
	Flush Mount (Metallic)	Round	LBW6ML-M0	LBW6ML-A0
		Square	LBW7ML-M0	LBW7ML-A0
	Flush Mount (Built-in switch guard)	Round	LBW6GL-M0	LBW6GL-A0
		Square	LBW7GL-M0	LBW7GL-A0
	Flush Mount (Plastic)	Round (for extended lens)	LBW6L-M20	LBW6L-A20
	Flush Mount (Metallic)		LBW6ML-M20	LBW6ML-A20

Lens

Shape	Color	Part Number
Round (Flush)	Amber	LBW6A-L1A
	Green	LBW6A-L1G
	Red	LBW6A-L1R
	Blue	LBW6A-L1S
	White	LBW6A-L1W
	Yellow	LBW6A-L1Y
Round (Extended)	Amber	LBW6A-L2A
	Green	LBW6A-L2G
	Red	LBW6A-L2R
	Blue	LBW6A-L2S
	White	LBW6A-L2W
	Yellow	LBW6A-L2Y
Square (Flush)	Amber	LBW7A-L1A
	Green	LBW7A-L1G
	Red	LBW7A-L1R
	Blue	LBW7A-L1S
	White	LBW7A-L1W
	Yellow	LBW7A-L1Y
Round Ring Flush	White	LBW6A-L1R-W
Square Ring Flush	White	LBW7A-L1R-W

Note: No marking plate used in ring illuminated pushbottons.

Dimensions

All dimensions in mm.

Flush/Ring-illuminated

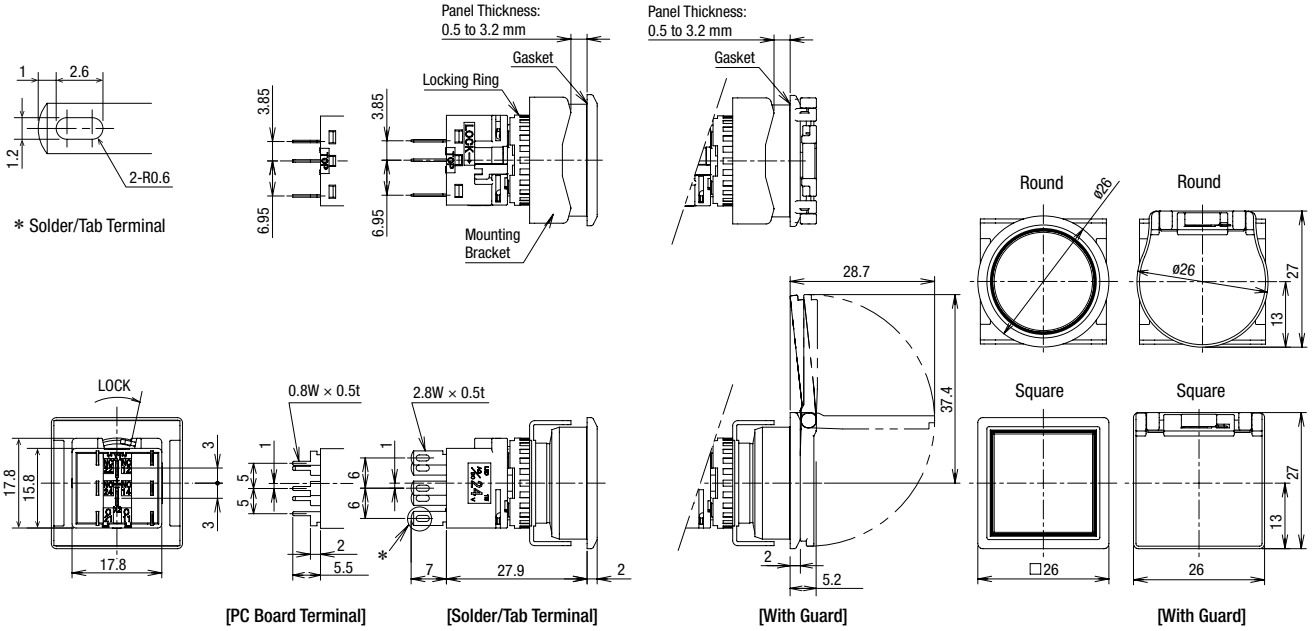

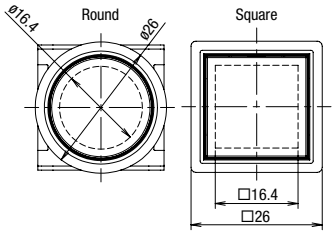

Ring-illuminated

Extended

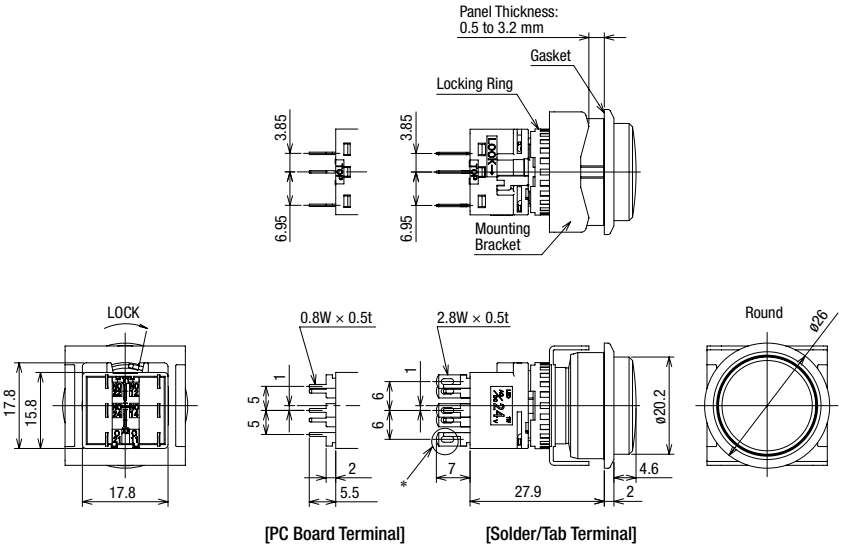

Terminal Arrangement (Bottom View)

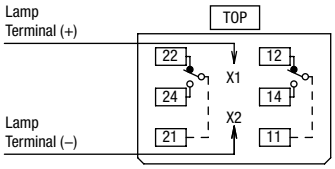

(SPDT contacts on the right only)

- For details on pc board and circuit design, see 594.
- For details on single board mounting, see 593.