Disconnect switches
Index

19 - Disconnect switches

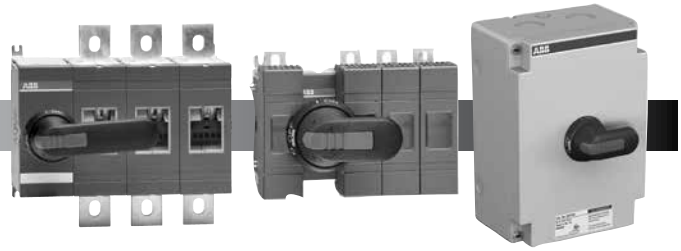

Non-fusible and fusible disconnect switches .....19.1 - 19.6

General information
- Versatility, broad range, compact size.....19.1
- International acceptance, installation options, broad range of accessories 19.2
- Mounting, mounting positions, incoming power feeds, terminal connections.....19.3
- Finger proof, door interlock, padlockable, positive opening operation.....19.4
- Welded contact protection, clear position indication, visible blades, constant control 19.5
- High performance, superior short circuit protection, fuse isolation 19.6

Non-fusible disconnect switches .....19.7 - 19.18

Approvals and ratings.....19.7
Ordering details guide.....19.8 - 19.9
Ordering details information.....19.10
Base and DIN rail mounted, 16 - 3150A 19.11
Door mounted, 16 - 100A.....19.12
Side operated.....19.13
Flange & double throw.....19.14 - 19.17
OTDC Disconnect switches.....19.18

Fusible disconnect switches .....19.19 - 19.28

Approvals and ratings.....19.19
Ordering details guide.....19.20
Ordering details information.....19.21
Base & DIN rail mounted.....19.22
Side operated and flange.....19.23 - 19.26
High speed fuse pattern .....19.27 - 19.28

Accessories .....19.29 - 19.40

Standard handles & shafts.....19.30 - 19.32
Auxiliary contacts.....19.33
Terminal lugs.....19.34
Terminal shrouds 19.35
Additional poles.....19.36
Fuse monitors & carriers.....19.37
Miscellaneous accessories & replacement parts 19.38
Conversion, transfer & bypass mechanisms.....19.39

Enclosed disconnect switches .....19.41 - 19.48

General information .....19.42 - 19.44
Non-fusible
- 3 pole, 16A - 3150A 19.45
- 6 pole, 16A - 1200A 19.46

Fusible
- 3 pole, 30A - 800A 19.47

Accessories.....19.48

Technical data.....19.49 - 19.66

Technical data .....19.49 - 19.59
Auxiliary contact timing diagrams.....19.60 - 19.63
NEMA Environmental ratings .....19.64 - 19.65
Definitions.....19.66

Approximate dimensions .....19.67 - 19.91

19

Non-fusible & fusible
Disconnect switches

Non-fusible & fusible disconnect switches

General information

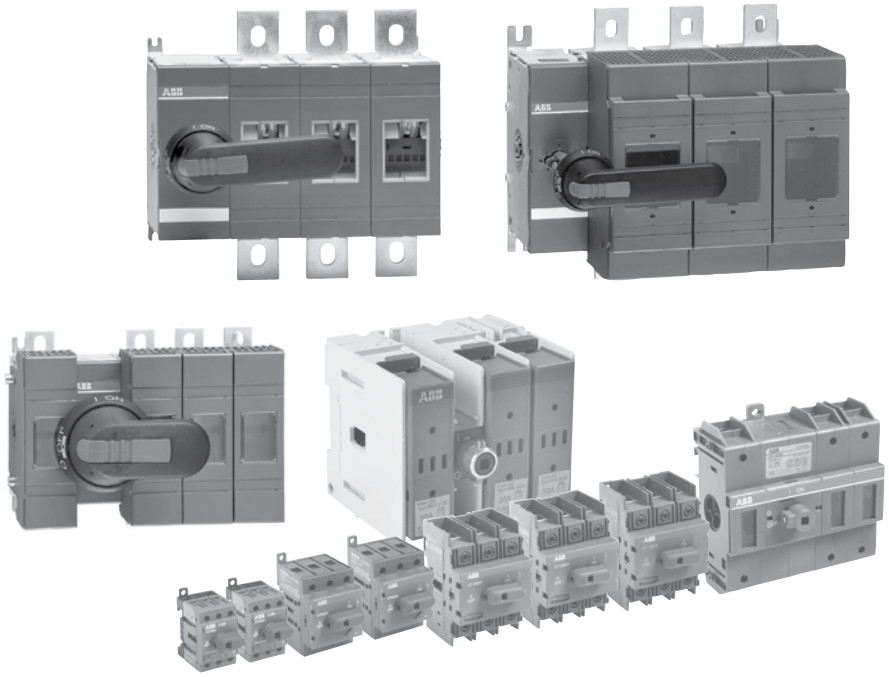

Versatility

ABB disconnect switches are designed to offer maximum versatility in many ways.

Broad range

ABB's open style non-fusible switches have seventeen amperage sizes from 16A – 3150A. The fusible range is 30A - 1200A. All sizes are compact, heavy duty, 600V disconnect switches. Many sizes are available in 2, 3, 4, 6, and 8 pole configurations.

Compact size

The non-fusible disconnect switches' compact dimensions allow panel size reduction in new applications or easily retrofit into space-sensitive existing installations. The fusible switch occupies little more panel space than the appropriate fuses.

General information

International acceptance

UL listed, CSA approved, IEC rated, CE marked, and most other international standards.

UL98 (CSA 22.2 No.4) — UL File # E101914, CSA File #LR58077

For OT30 - OT1200, OS30A - 1200A switches with OT/OS OH_pistol grip handles

Suitable for use as motor disconnects or industrial control panel disconnects on service entrance equipment, panelboards, switchboards, industrial control equipment, motor control centers, etc. and are horsepower and ampere rated.

UL508 (CSA 22.2 No. 14) — UL File # E63822, CSA File #LR58247

For OT16 – OT80 switches, OH_ selector handles

Suitable for use in equipment or machinery as motor controllers & motor disconnects and are horsepower and ampere rated.

IEC

Tested in accordance to IEC 947-1 and 3, IEC 664, IEC 269, and IEC 204.

CE

Compliance with the European Machine Directive IEC 204 (EN 60204).

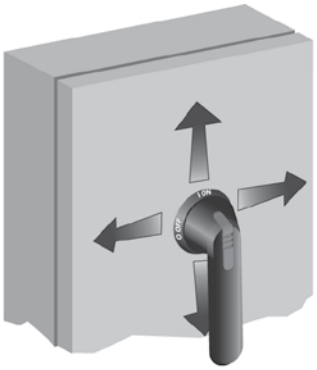

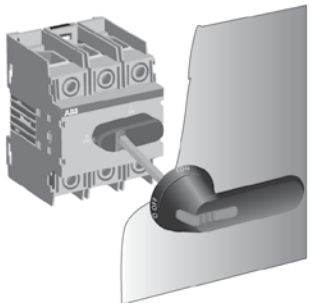

Installation options

Rotary through the door: available in all sizes, non-fusible 16A – 3150A; fusible 30A - 1200A.

Flange: versions available in 30A - 1200A sizes.

A rotary disconnect switch may be installed nearly anywhere in a control panel — mounting is not limited to the upper right hand corner of the panel.

Mount the switch where it conveniently fits in your panel and simply install the handle on the door, in line with the switch. The switch and handle are mechanically linked through an easily adjusted shaft. This allows fast and easy installation into panels of different depths and layouts.

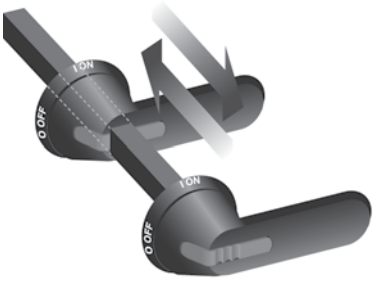

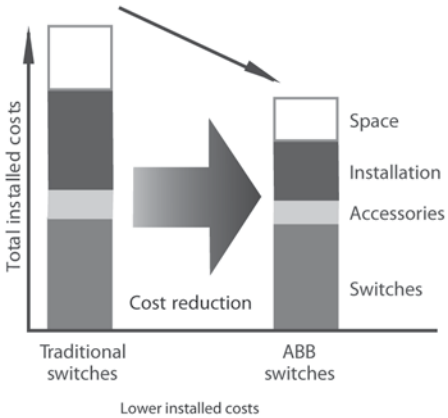

Broad range of accessories

- Handles — UL/NEMA type 1, 3R, 4, 4X, 12; IP54, 65, 66
- Auxiliary contacts available for every switch size
- Additional power poles
- Additional terminal poles (neutrals & grounds)
- Terminal shrouds
- 6 & 8 pole mechanisms
- Transfer mechanisms
- Bypass mechanisms
- Mechanical interlock mechanisms
- Electro-mechanical interlock mechanisms

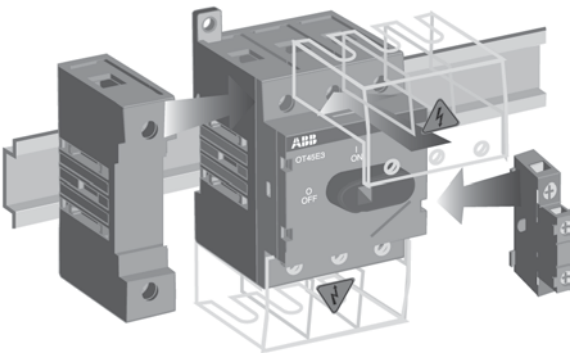

General information

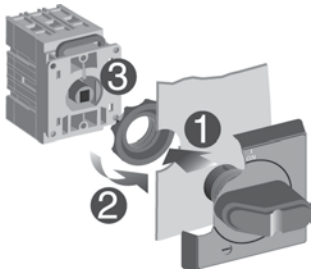

Mounting

Disconnect switches offer several mounting possibilities:

- Door mounting on an enclosure door or sidewall for non-fusible, 16A – 100A
- DIN rail mounting for non-fusible, 16A – 100A; and fusible, OS30 - OS100
- Base mounting with screws for all switch sizes

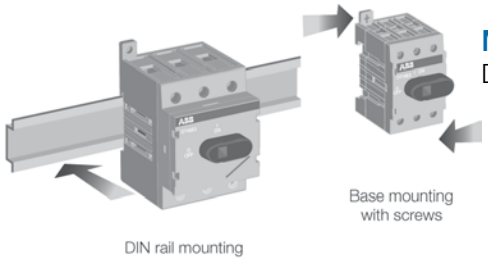

Mounting positions

Disconnect switches offer several mounting possibilities:

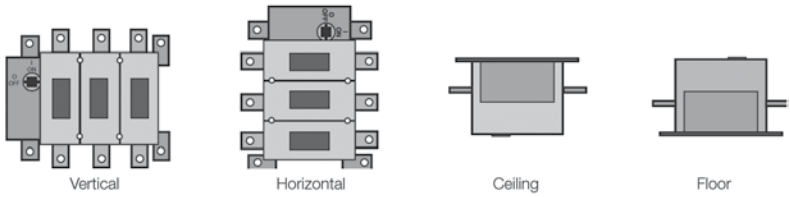

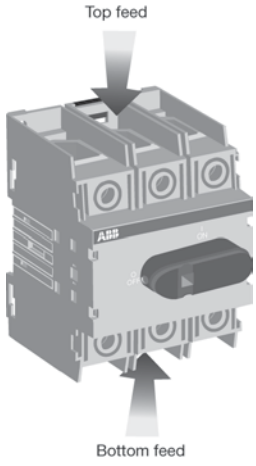

Incoming power feeds

Disconnect switches can be used equally well with either top or bottom incoming power feeds.

Terminal connections

Versatile connecting possibilities for non-fusible and fusible switches

- Ring tongue crimp on lugs
- Direct bus
- Terminal lugs

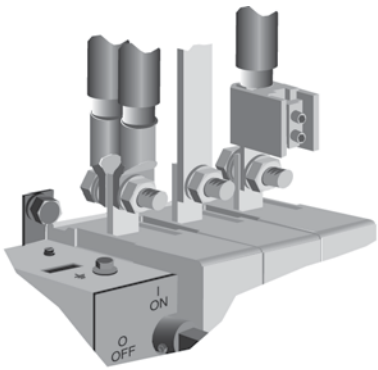

General information

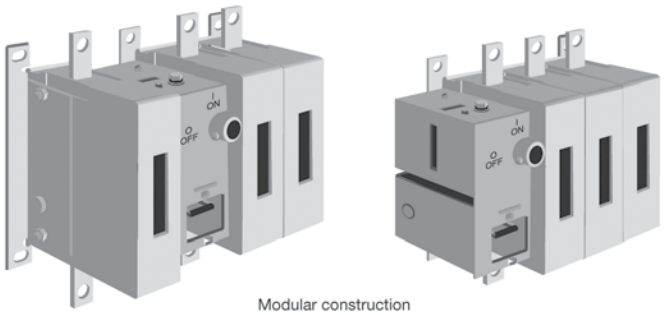

Modular construction

Finger proof

Dead-front construction plus terminal shrouds reduce the risk of touching live parts, improving the safety and reliability of the installation.

Door interlock

The handle and shaft provide a door interlock; the door can not be opened when the switch is in the “ON” position. NOTE: Some handles provide a method for qualified personnel to circumvent the door interlock. This is commonly referred to as a “defeater” mechanism.

Door interlock

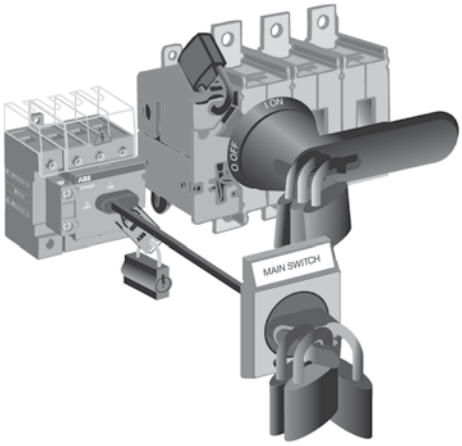

Handle and mechanism padlocked OFF

Padlockable

Handles can be padlocked in the “OFF” position with up to three padlocks. Additionally, the switch mechanism can be directly padlocked in the “OFF” position when the door is open. NOTE: Some handles can be ordered with the ability to padlock in both the “ON” & “OFF” positions, please consult your ABB sales office.

Positive opening operation

All switches operate according to the “positive opening operation” principle. This means the contacts are opened and closed by a driven mechanism, a solid moving bridge, not merely springs. This provides reliable position indication to the user; if the switch is in the “OFF” position, the contacts are open.

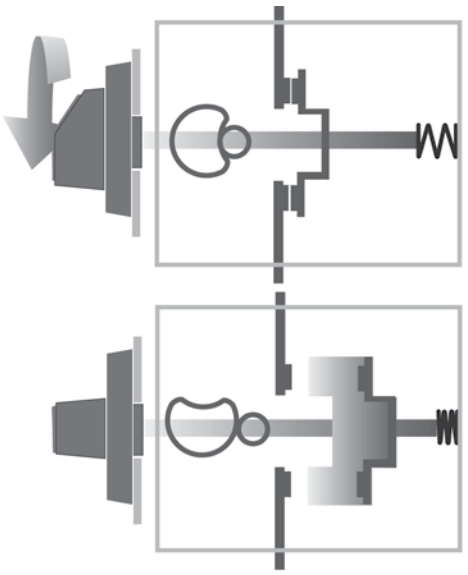
Positive opening operation

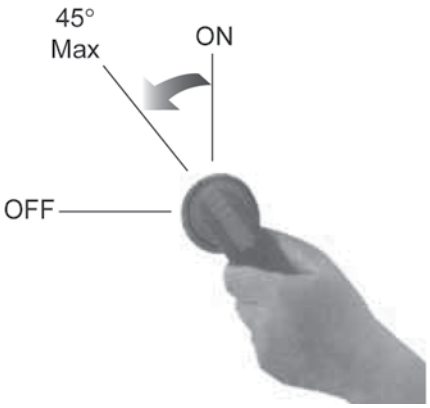

Welded contact protection

Positive opening operation safeguards users in case of welded contacts due to an overload or short circuit. The switch can not reach the “OFF” position unless the contacts are truly open. If any or all of the contacts are welded shut, the switch mechanism will only allow the handle to operate a maximum of 45°. This safeguards personnel by:

- Alerting them a problem has occurred
- Maintaining the door interlock and
- Not allowing a padlock to be inserted

Clear position indication

All switches and handles have clear “ON” and “OFF” designations. Whether the door is open or closed, it is possible to simply look at the switch and determine if the switch is “ON” or “OFF”.

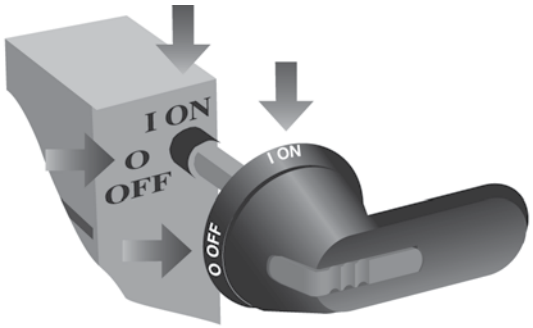

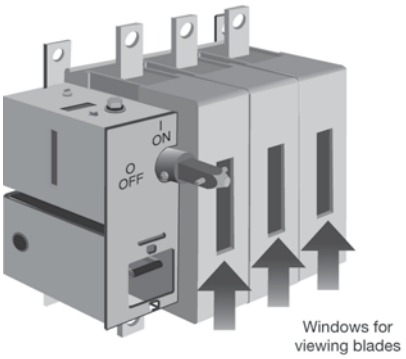

Visible blades

Visible blades offer additional safety for non-fusible switches, 100A — 1200A

Track resistant material

Excellent track resistant material, CTI > 600V, IEC 112, reduces the risk of flash-over between phases in even the most severe circumstances.

Constant control for non-fusible disconnect switches

The OT16F3 to OT100F3 provide the user with constant control over the power circuit. Whether the enclosure door is open or closed, qualified personnel have the ability to manually operate the switch. This is most meaningful when qualified personnel are working with the enclosure door open: In case of an emergency down-stream, the main three phase power can be disconnected immediately using the black, direct mounted handle.

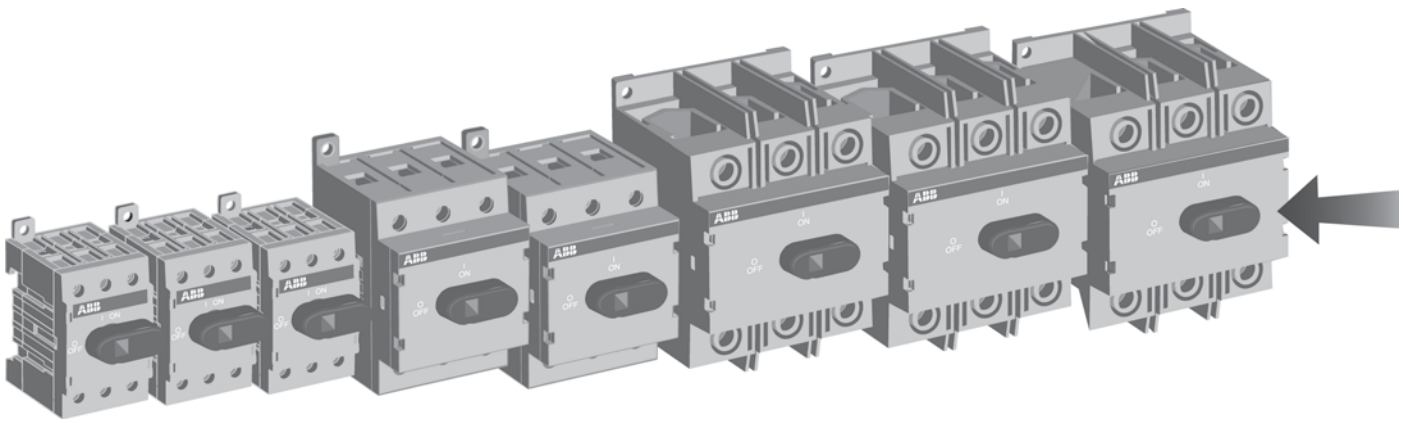

General information

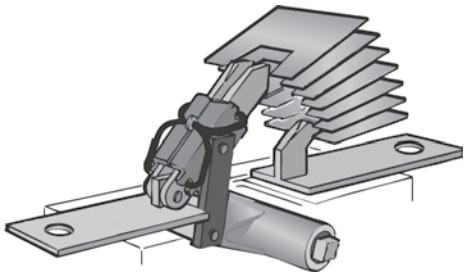

High performance

The mechanism is quick-make/quick-break, meaning the contacts operate independently of the speed and force at which the handle is operated. This, in combination with unique, patented self-cleaning contacts, provides a long, reliable, electrical life.

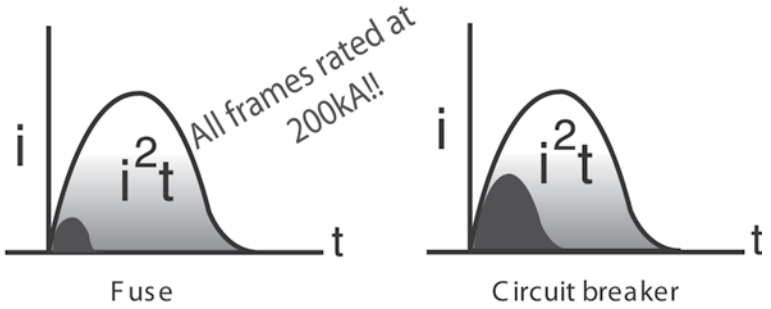

Superior short circuit protection

Superior short circuit protection

Fuses efficiently limit the peak let-through current, i^2t, during a fault better than any other product, contributing to safety and reliability. Selectivity and coordination are easily accomplished with fused protection. Fusible disconnect switches accept a wide range of fuses:

Class CC 30A
Class J 30A – 600A
Class L 800A – 1200A

Fuse isolation

Fused switches contain contacts on both sides of the fuse. The fuses are totally isolated in the “OFF” position, reducing the risk of shock to authorized personnel — even if the switch has been back fed.

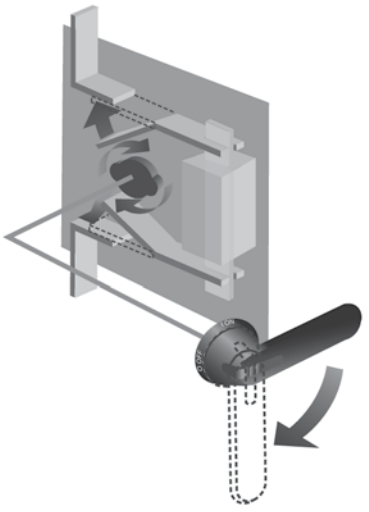

Fuse isolation

Non-fusible disconnect switches

Non-fusible disconnect switches
16A – 3150A, 600VAC
100-200A, 1000VDC

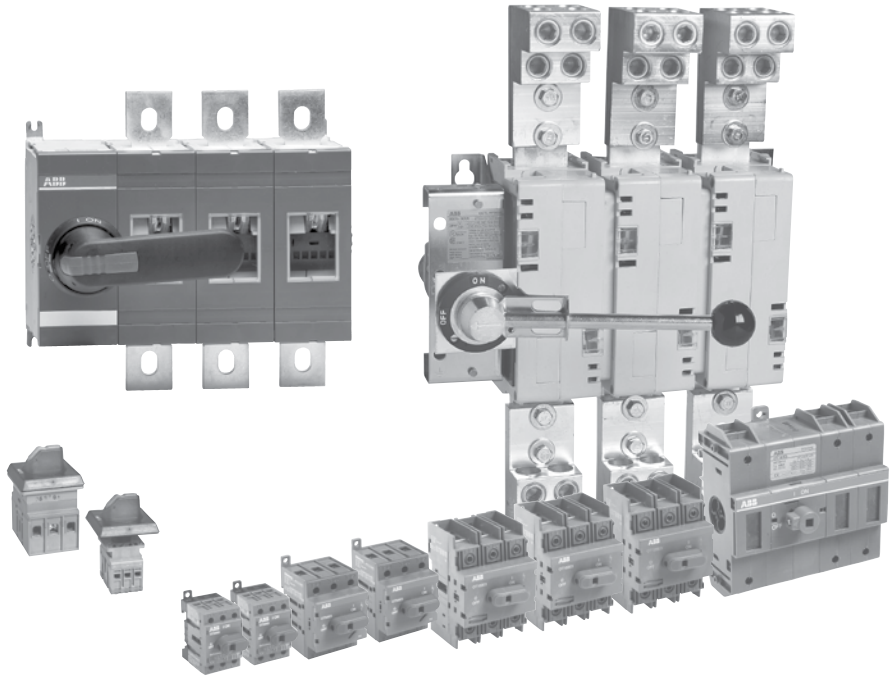

ABB SwitchLine includes 16 different amperage sizes from 16A to 3150A. The basic construction provides flexibility, safety, and high performance in an extremely compact size. ABB SwitchLine is a perfect choice for all switching applications from industrial motor control to construction safety switches.

International acceptance

UL listed, CSA approved, IEC rated, CE marked, and most other international standards.

UL98 (CSA 22.2 No.4) — UL File # E101914, CSA File #LR58077
For OT30, OT60, OT100, OT200, OT400, OT600, OT800, OT1200
OETL-NF1600 – OETL-NF2000 switches, OH_ pistol grip handles
Suitable for use as motor disconnects or industrial control panel disconnects on service entrance equipment, panelboards, switchboards, industrial control equipment, motor control centers, etc. and are horsepower rated and ampere rated.

UL508 (CSA 22.2 No. 14) — UL File # E63822, CSA File #LR58247
For OT16 – OT80 switches, OH_ selector handles
Suitable for use in equipment or machinery as motor controllers & motor disconnects and are horsepower and ampere rated.

IEC
Tested in accordance to IEC 947-1 and 3, IEC 664, IEC 269, and IEC 204

CE
Compliance with the European Machine Directive IEC 204 (EN 60204)

General information
Selection guide
OT16F3 – OT100F3

OT16F3 OT25F3 OT40F3

OT63F3 OT80F3

OT30F3 OT60F3 OT100F3

Catalog number	3 pole	OT16F3	OT25F3	OT40F3	OT63F3	OT80F3	OT30F3	OT60F3	OT100F3
General purpose amp rating	**A**	**20**	**30**	**40**	**60**	**80**	**30**	**60**	**100**
Approvals ①									
	2 pole	N/A	N/A	N/A	N/A	N/A	N/A	N/A	N/A
	3 pole	UL508 & IEC	UL508 & IEC	UL508 & IEC	UL508 & IEC	UL508 & IEC	UL98 & IEC	UL98 & IEC	UL98 & IEC
	4 pole	UL508 & IEC	UL508 & IEC	UL508 & IEC	UL508 & IEC	UL508 & IEC	UL98 & IEC	UL98 & IEC	UL98 & IEC
Technical ratings – UL,CSA ②									
Max operating voltage	V	600	600	600	600	600	600	600	600
Max horsepower rating									
Three phase									
240V	HP	5	7.5	10	15	20	10	20	30
480V	HP	10	15	20	30	40	20	40	50
600V	HP	10	20	25	30	40	30	40	50
Single phase									
120V	HP	1	1.5	2	2	2	2	3	5
240V	HP	2	3	5	5	5	5	7.5	15
Technical ratings – IEC②									
Rated insulation and operational voltage. AC20 and DC20	V	750	750	750	750	750	750	750	750
Rated thermal current, I_{th}									
AC 20/DC 20 open	A	25	32	40	63	80	40	63	115
AC 20/DC 20 enclosed	A	25	32	40	63	80	40	63	115
AC 21A ≤500V	A	16	25	32	63	80	40	63	100
≤690V	A	16	25	32	63	80	40	63	100
Rated operational power AC23									
400/415V	kW	7.5	9	11	22	37	15	18.5	37
690V	kW	7.5	9	11	15	18.5	15	15	37
Physical characteristics									
Weight ③ 3 pole	lb	0.24	0.24	0.24	0.59	0.59	0.79	0.79	0.79
Dimension 3 pole H	in	2.68	2.68	2.68	3.60	3.60	3.94	3.94	3.94
W	in	1.38	1.38	1.38	2.07	2.07	2.76	2.76	2.76
D	in	2.20	2.20	2.20	2.85	2.85	2.95	2.95	2.95
Accessories									
Terminal lug kit		Integral	Integral	Integral	Integral	Integral	Integral	Integral	Integral
Terminal shroud		•	•	•	•	•	•	•	•
Auxiliary contact		•	•	•	•	•	•	•	•
Shaft/handle diameter		6mm .24" x .24"	6mm .24" x .24"	6mm .24" x .24"	6mm .24" x .24"	6mm .24" x .24"	6mm .24" x .24"	6mm .24" x .24"	6mm .24" x .24"
Handle UL/NEMA type									
Type 1, 3R, 12		•	•	•	•	•	•	•	•
Type 1, 3R, 4, 4X, 12		•	•	•	•	•	•	•	•
Handle type									
Selector		•	•	•	•	•	–	–	–
Pistol		•	•	•	•	•	•	•	•
Recommended pistol handle length		45 - 65mm	45 - 65mm	45 - 65mm	45 - 65mm	45 - 65mm	45 - 65mm	45 - 65mm	45 - 65mm
Maximum recommended shaft length		290mm	290mm	290mm	290mm	290mm	290mm	290mm	290mm
Conversion kits									
6 pole		•	•	•	•	•	•	•	•
Transfer		•	•	•	•	•	•	•	•
Bypass		•	•	•	•	•	•	•	•
Mechanical interlock		•	•	•	•	•	•	•	•
Electrical interlock		–	–	–	–	–	–	–	–

• = Available
– = Not available

① UL listed switches are also CSA approved.
② For complete technical information please see page 19.49-19.66.
③ Switch only.

General information
Selection guide
OT200 – OT1200 & OETL-NF1600 – OETL-NF3150

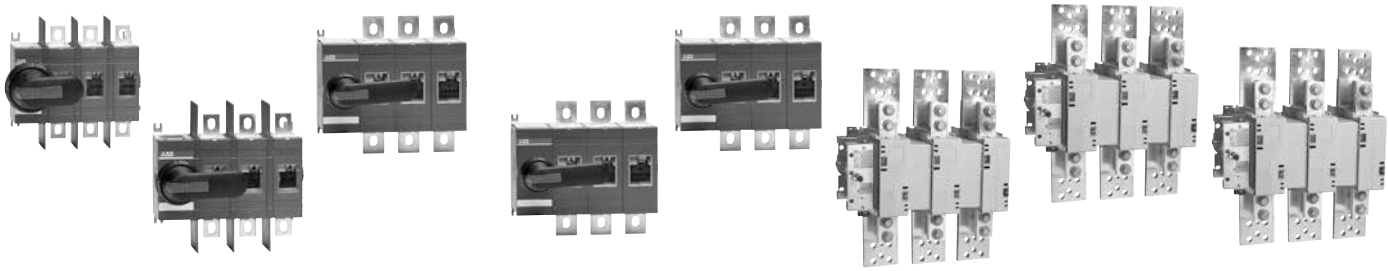

OT200U03 OT400U03 OT600U03 OT800U03 OT1200U03 OETL-NF1600SW OETL-NF2000SW OETL-NF3150SW

Catalog number	3 pole	OT200U03	OT400U03	OT600U03	OT800U03	OT1200U03	OETL-NF1600	OETL-NF2000	OETL-NF3150
General purpose amp rating	**A**	**200**	**400**	**600**	**800**	**1200**	**1600**	**2000**	**3150**
Approvals ①									
	2 pole	UL98 & IEC	UL98 & IEC	UL98 & IEC	UL98 & IEC	UL98 & IEC	UL98 & IEC	UL98 & IEC	IEC
	3 pole	UL98 & IEC	UL98 & IEC	UL98 & IEC	UL98 & IEC	UL98 & IEC	UL98 & IEC	UL98 & IEC	IEC
	4 pole	UL98 & IEC	UL98 & IEC	UL98 & IEC	IEC	IEC	IEC	IEC	IEC
Technical ratings – UL,CSA ②									
Max operating voltage	V	600	600	600	600	600	600	480	600
Max horsepower rating									
Three phase									
240V	HP	75	125	200	250	—	—	—	—
480V	HP	150	250	450	500	—	—	—	—
600V	HP	200	350	500	600	—	—	—	—
Single phase									
120V	HP	—	—	—	—	—	—	—	—
240V	HP	—	—	—	—	—	—	—	—
Technical ratings – IEC ②									
Rated insulation and operational voltage. AC20 and DC20	V	1000	1000	1000	1000	1000	1000	1000	1000
Rated thermal current, I_{th}									
AC 20/DC 20 open	A	250	400	800	1250	1600	2500	2500	3150
AC 20/DC 20 enclosed	A	250	400	800	1250	1600	2300	2300	2600
AC 21A ≤500V	A	250	400	800	1250	1600	2500④	2500④	3150④
≤690V	A	250	400	800	1250	1600	2500④	2500④	3150④
Rated operational power AC23									
400/415V	kW	132	220	400	400	400	400	400	400
690V	kW	240	355	800	—	—	—	—	—
Physical characteristics									
Weight ③ 3 pole	lb	2.9	5.7	11.4	35.9	38.55	127.7	127.7	127.7
Dimension 3 pole H	in	6.69	8.66	10	19.09	19.09	25.04	25.04	25.04
W	in	6.67	8.7	10.64	14.29	14.29	18.43	18.43	18.43
D	in	3.30	3.35	5.56	4.92	4.92	10.67	10.67	10.67
Accessories									
Terminal lug kit		OZXA-200	OZXA-400	OZXA-800	OZXA-1200	OZXA-1200	OZXA-28	OZXA-28/2	OZXA-28/2
Terminal shroud		•	•	•	•	•	—	—	—
Auxiliary contact		•	•	•	•	•	•	•	•
Shaft/handle diameter		6mm .24" x .24"	12mm .47" x .47"	12mm .47" x .47"	12mm .47" x .47"	12mm .47" x .47"	12mm .47" x .47"	12mm .47" x .47"	12mm .47" x .47"
Handle UL/NEMA type									
Type 1, 3R, 12		•	•	•	•	•	•	•	•
Type 1, 3R, 4, 4X, 12		•	•	•	•	•	•	•	•
Handle type									
Selector		—	—	—	—	—	—	—	—
Pistol		•	•	•	•	•	•	•	•
Recommended pistol handle length		65 - 80mm	125 - 175mm	125 - 175mm	125 - 175mm	125 - 175mm	125 - 175mm	125 - 175mm	125 - 175mm
Maximum recommended shaft length		290mm	595mm	595mm	595mm	595mm	595mm	595mm	595mm
Conversion kits									
6 pole		•	•	•	•	•	—	—	—
Transfer		•	•	•	•	•	—	—	—
Bypass		•	•	•	•	•	—	—	—
Mechanical interlock		•	•	•	•	•	•	•	•
Electrical interlock		•	•	•	•	•	•	•	•

S = Standard feature
• = Available
— = Not available

① UL listed switches are also CSA approved.
② For complete technical information please see page 19.49-19.66.
③ Switch only
④ IEC 947-3 Utilization Category B, Infrequent operation

Selection information

Standard part number designation ①

Non-Fusible OT Switches (16 to 100A)

OT 16 F 3 C

Amperage

16 = 20 amps*	63 = 60 amps*	60 = 60 amps
25 = 30 amps*	80 = 80 amps*	100 = 100 amps
40 = 40 amps*	30 = 30 amps	160 = 125 amps

Number of Poles

3 = 3 poles	4 = 4 poles	6 = 6 poles

Special Configuration

C = Double throw switch

*** UL508 listed switches. OT30_, OT60_ and OT100_ are cUL98 listed**

Non-Fusible OT Switches (200A and above)

OT 200 U 03 C

Amperage

200 = 200 amps 400 = 400 amps 600 = 600 amps 800 = 800 amps 1200 = 1200 amps

Number of Poles & Placement of Mechanism

02 = 2 poles to right of mechanism	04 = 4 poles to right of mechanism
03 = 3 poles to right of mechanism	40 = 4 poles to left of mechanism
30 = 3 poles to left of mechanism	22 = 2 poles to left, 2 poles to right of mechanism
12 = 1 pole to left, 2 poles to right of mechanism	13 = 1 pole to left, 3 poles to right of mechanism

Special Configuration

C = Double throw switch

All OT200__, OT400_, OT600_ , _OT800_ and OT1200_ switches are cUL98 listed.

Selector Handles

OHB S 1 P H

Handle Color

B = black Y = Red/Yellow

Physical Size

Connection to Switch

A = external shaft P = snap on R = screw

Protection Class

H = 1 J= 1, 3R, 12

Pistol Handles

O H B 65 J 6 E011

Handle Color

B = Black Y = Red/Yellow M = Stainless Steel

Handle Length

65 = 65mm 80 = 80mm 125 = 125mm 145 = 145mm 274 = 274mm 330 = 330mm

Environmental Rating

J = 1, 3R, 12 L = 1, 3R, 12, 4, 4X

Shaft Diameter

6 = 6mm 12 = 12mm

Special Configuration

E011 = 3 position double throw handle
EH = Stainless steel hasp

① Part designation keys are provided for reference only. Not all variations or configurations are available.

Base & DIN rail mounted ①
16A - 3150A

For a complete assembly, please select one of each:

1 switch (page 19.11)
1 handle (page 19.30)
1 shaft (page 19.32)
1 terminal lug kit (page 19.34)

NOTE: For additional accessories, see pages 19.29 - 19.40.

(Lug kits only necessary on switches 200A and above)

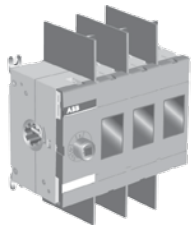

OT200U03 + OXP6X210 + OHB80J6 + OZXA-200

UL only	UL general purpose amp rating	IEC AC21 amp rating	2 Pole Catalog number	3 Pole Catalog number	4 Pole ② Catalog number	6 Pole ③ Catalog number
UL 508	20	16	—	OT16F3	—	OT16F6
	30	25	—	OT25F3	—	OT25F6
	40	40	—	OT40F3	—	OT40F6
	60	63	—	OT63F3	—	OT63F6
	80	80	—	OT80F3	—	OT80F6
UL 98	30	40	—	OT30F3	—	OT30F6
	60	63	—	OT60F3	—	OT60F6
	100	115	—	OT100F3	—	OT100F6
	200	250	OT200U02	OT200U03 OT200U30 OT200U12	OT200U04 OT200U40 OT200U22	— — —
	400	630	OT400U02	OT400U03 OT400U30 OT400U12	OT400U04 OT400U40 OT400U22	— — —
	600	800	OT600U02	OT600U03 OT600U30 OT600U12	OT600U04 OT600U40 OT600U22	— — —
	800	1250	OT800U02	OT800U03	OT800U04	—
	1200	1600	OT1200U02	OT1200U03	OT1200U04	—
	1600	2500 ④	OETL-NF16002SW	OETL-NF1600SW	OETL-NF16004SW	—
	2000	2500 ④	OETL-NF20002SW	OETL-NF2000SW	OETL-NF20004SW	—
	-	3150 ④	OETL-NF31502SW	OETL-NF3150SW	OETL-NF31504SW	—

Bulk packed 3 Pole, 600V Switches ⑤

UL only	UL general purpose amp rating	IEC AC21 amp rating	Bulk pack Quantity	Catalog number
UL508	20	16	50	OT16F3/B50
	30	25	50	OT25F3/B50
	40	40	50	OT40F3/B50
	60	63	50	OT63F3/B50
	80	80	50	OT80F3/B50
UL98	30	40	25	OT30F3/B25
	60	63	25	OT60F3/B25
	100	115	25	OT100F3/B25

① Above 100A, base mount with screws only.
② A snap on fourth pole may be added on 16-100A switches.
③ For a 6 or 8 pole switch 200 amp and above, a conversion mechanism accessory kit can be used with two 3 or 4 pole switches. See page 19.40.
④ Vertical busbar provided as standard on OETL-NF1600-OETL-NF3150 switches. For alternate back or edgewise mounting busbar, see page 19.38.
⑤ Order quantity is 1.

Door mounted ①
16 - 100A

For a complete assembly, please select one of each: ②

1 switch (page 19.12)
1 handle (page 19.30)

NOTE: For additional accessories, see pages 19.29 - 19.40.

OT63FT3

+

OHBS2RJ

UL only	UL general purpose amp rating	IEC AC21 amp rating	3 Pole ③ Catalog number	Bulk packs Bulk pack quantity	Bulk packs Bulk pack Catalog number
UL508	20	16	OT16FT3	50	OT16FT3/B50
	30	25	OT25FT3	50	OT25FT3/B50
	40	40	OT40FT3	50	OT40FT3/B50
	60	63	OT63FT3	50	OT63FT3/B50
	80	80	OT80FT3	50	OT80FT3/B50
UL98	30	40	OT30FT3	25	OT30FT3/B25
	60	63	OT60FT3	25	OT60FT3/B25
	100	115	OT100FT3	25	OT100FT3/B25

19

① Door mounted switches do not provide door interlock
② Door mounted switches do not require shafts
③ A snap on fourth pole may be added
④ The environmental rating of the pistol handle derates to NEMA 1 when used in conjunction with the OHZX6 adapter.

Other configurations
Side operated
30 - 600A

For a complete assembly, please select one of each:

1 switch
1 handle
1 shaft
1 terminal lug kit

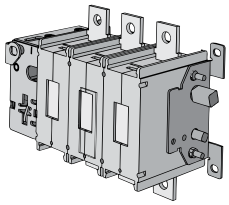

OETL-NF400-S

+

OXP12x325

+

OHB145J12E00S

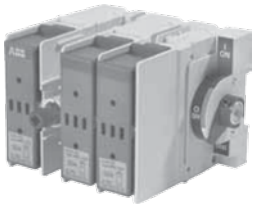

OSNF30-S

Side operated switches — 3 pole

UL general purpose amp rating	IEC AC21 amp rating	Maximum horsepower rating — Three phase 200V	208V	240V	480V	600V	Weight (Lbs.)	Catalog number
30	32	5	7.5	7.5	15	20	1.90	OSNF30-S ①
60	63	15	15	15	30	50	3.90	OSNF60-S ①
100	125	25	25	30	60	75	4.50	OSNF100-S
400	630	100	100	125	250	350	13.66	OETL-NF400-S
600	800	150	150	200	400	500	13.66	OETL-NF600A-S

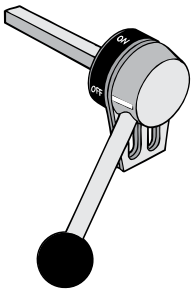

OETL-ZX74

OHY__J__

Handles

UL/NEMA type	Color	Length inches/mm	Marking	Defeatable	Padlockable	Weight (Lbs.)	Catalog number
For use with OSNF30-S							
1, 12, 3R	Black Red/Yel	2.65/65	O/I & Off/On	Yes	Yes	Yes	OHB65J6E00S OHY65J6E00S
For use with OSNF60-S — OSNF100-S							
1, 12, 3R	Black Red/Yel	3.1/80	O/I & Off/On	Yes	Yes	Yes	OHB80J6E00S OHY80J6E00S
For use with OETL-NF400-S — OETL-NF600A-S							
1, 12, 3R	Black Red/Yel Metal	4.9/145	O/I & Off/On O/I & Off/On Off/On	Yes	Yes	Yes	OHB145J12E00S OHY145J12E00S OETL-ZX74

OXP6X170
OXP12X325

Shaft

For use with:	Length (Inches/mm)	Description	Weight (Lbs.)	Catalog number
OSNF30-S	6.7/170	.20 x .20" (5 x 5mm)	0.08	OXP6X170
OSNF60-S – OSNF100-S	8.3/210	.24 x .24" (6 x 6mm)	0.10	OXP6X210
OETL-NF400-S – OETL-NF600A-S	12.8/325	.47 X .47" (12 X 12mm)	0.90	OXP12X325

OZXA-24

OZXA-25

OZXA-26

Terminal lug kits

For use with:	Wire size	Weight	Wire type	Lugs per kit	Catalog number
OSNF30-S	#18 – 8	—	Cu	—	Integral
OSNF60-S	#14 – 4	—	Cu	—	Integral
OSNF100-S	#14 – 2/0	0.43	Cu/Al	6	OZXA-24
OETL-NF400-S	#2 – 600 kcmil	3.520	Cu/Al	6	OZXA-26
OETL-NF600A-S	(2) #2 – 600 kcmil	4.62	Cu/Al	6	OZXA-27

① Fused switches with solid links installed.

Special configurations
Shaft operated flange
30A - 100A

Switch

+

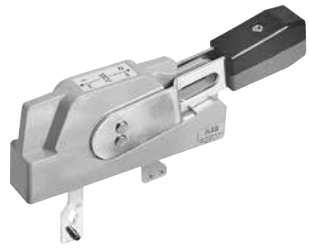

Handle

+

Shaft

OT100F3

30A -100A Flange operated — non fusible switches (Shaft) - 3 pole

UL general purpose amp rating	Catalog number
30 60 100	OT30F3-F OT60F3-F OT100F3-F

Flange handles — for use with OT30_, OT60_, OT100

DSFHN-HS12

UL/ NEMA type	Marking	Defeatable	Padlockable	Catalog number
1, 3R, 12 4, 4X	OFF/ON OFF/ON	Yes Yes	Yes Yes	DSFHN-HS12 DSFHN-HS4

Shafts

For use with:	Maximum enclosure depth (inches)			Catalog number
OT30_ - OT100_ OT30_ - OT100_	16 24			OTFS-16 OTFS-24

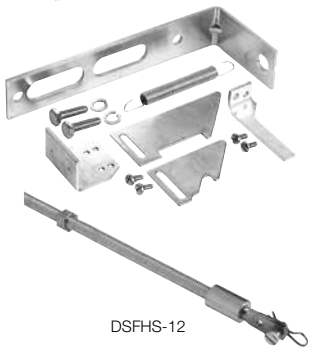

DSFHS-12

Door hardware NEMA 12

Item	Catalog number
Safety door latch, 2 point, door less than 40" high	KDH2R
Safety door latch, 2 point, door greater than 40" high	KDH3R

Flange operated fusible and non-fusible disconnect switches

ABB's solution for complying with the new NFPA79 requirements is Flange Operated Fusible and Non-fusible Disconnect Switches.

NFPA 79 changes requires main disconnecting means to be operable without the use of accessory tools or devices, independent of door position. This code also includes an interlocking provision to prevent the closing of disconnects while the enclosure door is open, unless an interlock is operated by a deliberate action.

The flange operated disconnect switches are available as ridged shaft or flexible cable operated versions. The cable operated version allows you to install the disconnect switch virtually anywhere in the enclosure depending on the length of the cable. Cables are available in lengths up to 84 inches.

The designs are cost-effective NFPA 79 solutions offering quick and easy installation.

Special configurations
Cable operated flange
30A - 1200A

Switch

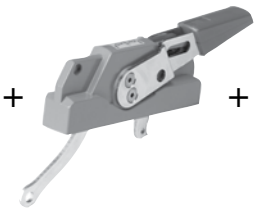
Handle

Cable

Lug kit (as required)

Operating mechanism ①

Non-fusible

UL general purpose amp rating	Catalog number
30	OT30F3
60	OT60F3
100	OT100F3
200	OT200U30

UL general purpose amp rating	Catalog number
400	OETL-NF400-FC ②
600	OETL-NF600A-FC ②
800	OETL-NF800A-FC ②
1200	OETL-NF1200-FC ②

OT100F3

Flange handles — UL98; UL file #E101914

For use with:	Environmental rating	Catalog number
OT30 - 100F3, OT160E3, OT200U30	NEMA 1, 3R, 12	OHF1C12
	NEMA 4, 4X	OHF1C4
OETL-NF400_, OETL-NF600_, OETL-NF800_, OETL-NF1200_	NEMA 1, 3R, 12	K7FCH
	NEMA 4, 4X	K7FCH4

OHF1C12

Flexible cables

For use with:	Cable length (inches)	Catalog number
OT30 - 100F3, OT160E3, OT200U30	36	OXC1L36
	48	OXC1L48
	60	OXC1L60
	72	OXC1L72
	84	OXC1L84
OETL-NF400_, OETL-NF600_, OETL-NF800_, OETL-NF1200_	48	K7C048
	60	K7C060
	72	K7C072
	84	K7C084

OXC1L36-
OXC1L84

Operating mechanisms

For use with:	Catalog number
OT30 - 100F3	MKCS1
OT160E3	MKCS3
OT200U30	MKCS4
OETL-NF400-FC, OETL-NF800_, OETL-NF1200-FC	Included

① Operating mechanism required for OT30 - OT200
② Operating mechanism is included.

Special configurations
Cable operated flange
30A - 1200A

Terminal lug kits

For use with	Wire size	Wire type	Description	Lugs per kit	Catalog number
OT200U30	#4 – 300 kcmil	Cu/Al	—	6	OZXA-200
	#4 – 300 kcmil	Cu/Al	—	3	OZXA-200/3
	(6) #4-6 AWG	Cu/Al	Distribution lug	3	OZXA-206S
OETL-NF400-FC	#2 - 600 kcmil	Cu/Al	-	6	OZXA-26
OETL-NF600 -	#2 - 600 kcmil	Cu/Al	-	6	OZXA-27
OETL-NF800	#2 - 600 kcmil	Cu/Al	-	3	OZXA-27/3P
	(6) 14-6 AWG	Cu/Al	Distribution lug	3	OZXA-175/400
OETL-NF1200	(4) #2-600 kcmil	Cu/Al	-	6	OZXA-28
	(8) 2/0 + (2) #2-600 kcmil	Cu/Al	-	3	OZXA-28/3P
	(8) 2/0 + (2) #2-600 kcmil	Cu/Al	Distribution lug	3	OZXA-32

Door hardware — NEMA 12

Item	Catalog number
Safety door latch, 2 point, door less than 40” high	KDH2R
Safety door latch, 3 point, door greater than 40” high	KDH3R

Terminal shrouds

For use on	Description	Weight (lbs.)	Catalog number
OT30 - OT100	3 Pole	0.02	OTS125T3
OT200	3 Pole Long Type Shroud	0.2	OTS250G1L/3
OT200	3 Pole Short Type Shroud	0.13	OTs250G1S/3
OETL-NF400	3 Pole (includes one shroud for line and load side)	0.62	OETL-ZX111
OETL-NF600	3 Pole (includes one shroud for line and load side)	0.66	OETL-ZX94
OETL-NF800	3 Pole (includes one shroud for line and load side)	0.88	OETL-2X800A
OETL-NF1200	3 Pole (includes one shroud for line and load side)	1.2	OETL-2X119

Special configurations
Double throw switches
16A - 600A

For a complete assembly, please select one of each:

1 switch (page 19.17)
1 handle (page 19.30)
1 shaft (page 19.32)
1 terminal lug kit (page 19.34)
1 bridging bar (page 19.17)

NOTE: For additional accessories, see pages 19.29 - 19.40

(Lug kits only necessary on switches 200A and above)

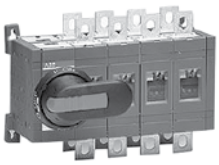
OT200U04C

OHY__J6E011

OXS6X__

Lug kit (as required)

Bridging bars

OT63F3C

UL only	UL general purpose amp rating	IEC AC21 amp rating	3 Pole Catalog number	4 Pole ① Catalog number
UL508	20	16	OT16F3C	—
	30	25	OT25F3C	—
	40	40	OT40F3C	—
	60	63	OT63F3C	—
	80	80	OT80F3C	—
UL98	30	40	OT30F3C	—
	60	63	OT60F3C	—
	100	115	OT100F3C	—
	200	250	OT200U03C OT200U30C	OT200U04C OT200U40C
	400	630	OT400U03C OT400U30C	OT400U04C OT400U40C
	600	800	OT600U03C OT600U30C	OT600U04C OT600U40C
	800	1250	OT800U03C OT800U30C	OT800U04C OT800U40C

Bridging busbar kits — required for OT200_C through OT600_C ②

OTZC13

Description	For Use On:	Catalog number
3 Pole Kit	OT200_C OT400_C OT600_C OT800_C	OTZC13 OTZC23 OTZC33 OTZC53
4 Pole kit	OT200_C OT400_C OT600_C OT800_C	OTZC14 OTZC24 OTZC34 OTZC54

Bridging bars are required on 200-600A double throw switches to operate as standard double throw switches.
Otherwise, they will operate as two mechanically interlocked switches.

① A snap on power pole may be added to build a 4 pole 16-100A double throw switch.
② For 16-100A double throw switches, jumpers are not provided.

OTDC Disconnect switches
28A - 55A, 600VDC
100A - 200A, 1000VDC

OTDC200U11

OTDC200U02

UL Category	UL General purpose amp rating	IEC DC21B amp rating	Number of circuits	Number of poles	Catalog number w/jumper installed	Catalog number w/o jumper
28A - 55A, 600VDC						
UL508	28	28	1	8 +1	–	OT40FD9N2
	55	55	1	8	–	OT80FD8
100A - 200A, 1000VDC						
UL98B	100	100	1	2	OTDC100US11	OTDC100U11
	100	100	1	2	OTDC100US02	OTDC100U02
	100	100	2	4	OTDC100US22	OTDC100U22
	200	250	1	2	OTDC200US11	OTDC200U11
	200	250	1	2	OTDC200US02	OTDC200U02
	180	250	2	4	OTDC180US22	OTDC180U22
	250	315	1	2	OTDC250US11	OTDC250U11
	250	315	1	2	OTDC250US02	OTDC250U02
	250	315	2	4	OTDC250US22	OTDC250U22
	320	400	1	2	OTDC320US11	OTDC320U11
	320	400	1	2	OTDC320US02	OTDC320U02
	320	400	2	3	OTDC320US22	OTDC320U22
	400	500	1	2	OTDC400US11	OTDC400U11
	400	500	1	2	OTDC400US02	OTDC400U02
	400	500	2	2	OTDC400US22	OTDC400U22

Phase separators

Switch size	Units type (pcs)	Weight/ unit (lbs.)	Catalog number
100...200	6	0.04	OTDCB250/6
250...400	6	0.05	OTDCB400/2

Grey plastic plate for maintaining 1" clearance between the phases without terminal shrouds. Snap on mounting. Includes as standard in OTDC100...200U_types.

Jumper / heat sink

Switch size	Units type (pcs)	Weight/ unit (lbs.)	Catalog number
100...200	1	0.04	OEZXY91
250...400	1	0.08	OEZXY96

Terminal lugs

Switch size	Catalog number
100...200	OZXA-200
250...400	OZXA-400

Wiring diagrams

2 Pole

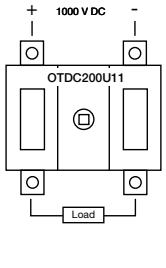

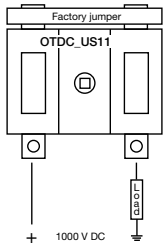

4 Pole

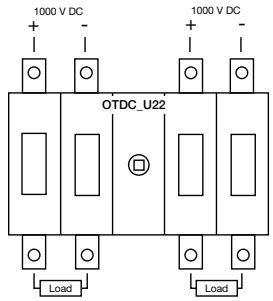

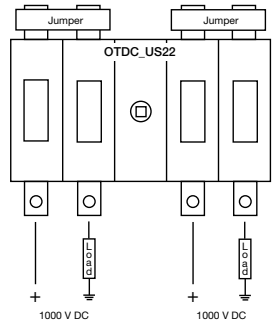

① "S" indicates jumpers installed. Jumpers are installed on line side, connecting 2 poles in series

Fusible Disconnect switches

Fusible disconnect switches
30A – 1200A, 600VAC

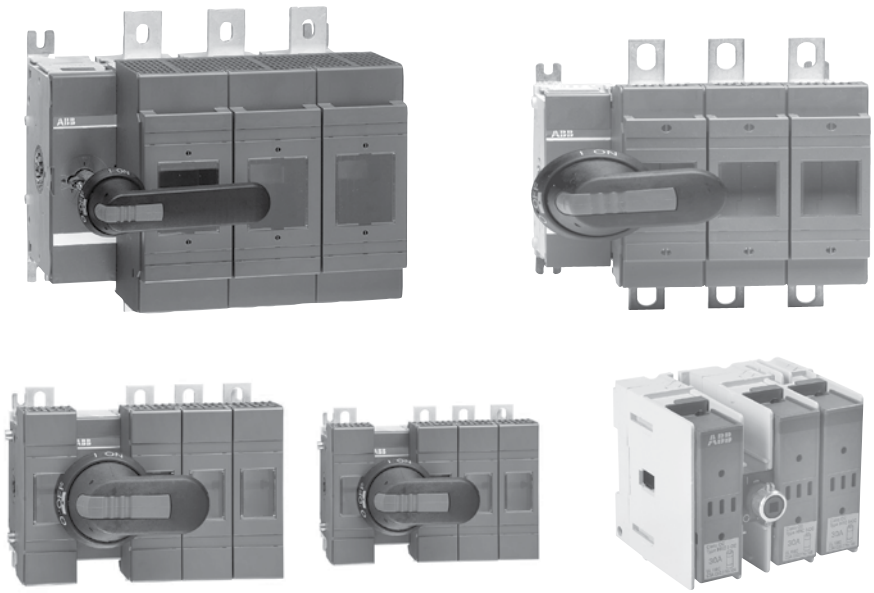

ABB PowerLine includes seven different amperage sizes from 30A to 1200A. All ABB fusible switches are designed to meet customer requirements in terms of high interrupting capacity and long electrical life while occupying little more panel space than the appropriate fuses. The basic construction provides flexibility and high performance in an extremely compact size. ABB PowerLine switches are a perfect choice to withstand the heat and humidity of the tropics, the extreme cold of the arctic and any rugged industrial environment you may have.

International acceptance

ABB fusible switches are available with a wide range of fuse clip options:

UL	USA	CSA	Canada
DIN	Europe	BS	United Kingdom
NFC	France	Ultra-rapid	

As well as the corresponding approvals: UL listed, CSA approved, IEC rated, CE marked, and most other international standards.

UL98 (CSA 22.2 No.4) — UL File # E101914, CSA File #LR58077

For 30A – 1200A switches, OH__ pistol grip handles

Suitable for use as motor disconnects or industrial control panel disconnects on service entrance equipment, panelboards, switchboards, industrial control equipment, motor control centers, etc. and are horsepower rated and ampere rated.

IEC

Tested in accordance to IEC 947-1 and 3, IEC 664, IEC 269, and IEC 204

CE

Compliance with the European Machine Directive IEC 204 (EN 60204)

Selection guide
OS30FACC12 – OS1200L03

OS30FA_12 OS60GJ03

OS100GJ03

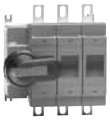

OS200J03

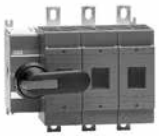

OS400J03

OS600J03

OS800L3

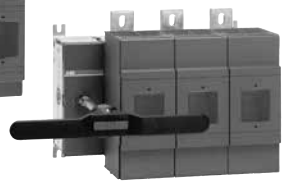

OS1200L03

Catalog number 3 pole			OS30FACC12	OS30FAJ12	OS60GJ12	OS100GJ03	OS200J03	OS400J03	OS600J03	OS800L3	OS1200L03
General purpose amp rating		A	30	30	60	100	200	400	600	800	1200
Approvals ①											
	2 pole		N/A	N/A	N/A	UL98 & IEC	UL98 & IEC	UL98 & IEC	UL98 & IEC	UL98 & IEC	UL98 & IEC
	3 pole		UL98 & IEC	UL98 & IEC	UL98 & IEC	UL98 & IEC	UL98 & IEC	UL98 & IEC	UL98 & IEC	UL98 & IEC	UL98 & IEC
	4 pole		UL98 & IEC	UL98 & IEC	UL98 & IEC	UL98 & IEC	UL98 & IEC	UL98 & IEC	UL98 & IEC	UL98 & IEC	IEC
Technical ratings (UL,CSA)											
Max operating voltage		V	600	600	600	600	600	600	600	600	600
Max horsepower rating											
Three phase											
	240V	HP	7.5	7.5	15	30	60	125	200	250	—
	480V	HP	15	15	30	60	125	250	400	500	—
	600V	HP	20	20	50	75	150	350	500	600	—
Single phase											
	120V	HP	2	2	—	—	—	—	—	—	—
	240V	HP	3	3	—	—	—	—	—	—	—
UL fuse class			CC	J	J	J	J	J	J	L	L
Technical ratings (IEC)											
Rated insulation and operational voltage. AC20 and DC20		V	1000	1000	1000	1000	1000	1000	1000	1000	1000
Rated thermal current, I_{th}											
AC 20/DC 20	open	A	32	32	63	160	200	400	630	800	1250
AC 20/DC 20	enclosed	A	32	32	63	160	200	400	600	720	1250
AC 21A	≤500V	A	32	32	63	160	200	400	630	800	1250
	≤690V	A	32	32	63	160	200	400	630	800	1250
Rated operational power AC23											
	400/415V	kW	14/15	14/15	30	80/90	110	220/230	355	350/380	560
	690V	kW	25	25	60	132	200	400	560	600	1000
Physical characteristics											
Weight	3 pole switch	lb	1.54	1.54	2.86	3.30	5.9	12.56	28.66	37.44	63.93
	4 pole	lb	1.98	1.98	3.52	3.96	7.5	15.21	37.48	46.26	—
Dimension	3 pole	H in	3.66	3.60	3.94	5.67	6.5	9.29	12.03	12.03	16.7
		W in	4.15	4.15	5.63	7.07	7.1	10.04	13.86	13.86	16.42
		D in	4.10	4.10	5.04	5.10	5.2	6.93	9.18	9.18	11.62
Accessories											
Double break contacts			S	S	S	S	S	S	S	S	S
Fuse cover			S	S	S	S	S	S	S	S	S
Terminal lug kit			Integral	Integral	Integral	OZXA-24	OZXA-200	OZXA-400	OZXA-800	OZXA-1200	OZXA-1200
Terminal shroud			Not required	Not required	Not required	•	•	•	•	•	•
Auxiliary contact			•	•	•	•	•	•	•	•	•
Shaft/handle diameter			6mm .24 x .24"	6mm .24 x .24"	6mm .24 x .24"	6mm .24 x .24"	6mm .24 x .24"	12mm .47 x .47"	12mm .47 x .47"	12mm .47 x .47"	12mm .47 x .47"
Handle UL/NEMA type											
Type 1, 3R, 12			•	•	•	•	•	•	•	•	•
Type 1, 3R, 4, 4X, 12			•	•	•	•	•	•	•	•	•
Recommended pistol handle length			45 - 65mm	45 - 65mm	45 - 65mm	45 - 65mm	65 - 80mm	125 - 175mm	125 - 175mm	125 - 175mm	125 - 175mm
Maximum recommended shaft length			290mm	290mm	290mm	290mm	290mm	595mm	595mm	595mm	595mm
Electrical interlock			—	—	—	—	—	•	•	•	•

S = Standard
• = Available
— = Not available

① UL listed switches are also CSA approved.

Standard part number designation ①

Fusible OS Switches (30A)

OS 30 F A J 22 F

Amperage
30 = 30 amps

Fuse Type/Class
J = Class J fuse compatible CC= Class CC fuse compatible

Number of poles and placement of the mechanism
12 = 1 Pole to the left of mechanism, 2 poles to the right of mechanism
22 = 2 Poles to the left of mechanism, 2 poles to the right of mechanism

Fusible OS Switches (60 to 100A)

OS 100G J 03

Amperage
60 = 60 amps 100 = 100 amps

Fuse Type/Class
J = Class J fuse compatible

Number of poles and placement of the mechanism
03 = 3 Poles to the right of mechanism 04 = 4 poles to the right of mechanism

Fusible OS Switches (200A and above)

OS 200 J 04 F

Amperage
200 = 200 amps 400 = 400 amps 600 = 600 amps 800 = 800 amps 1200 = 1200 amps

Fuse Type/Class
J = Class J fuse compatible

Number of poles and placement of the mechanism
03 = 3 Poles to the right of mechanism
12 = 1 Pole to left of mechanism, 2 poles to right
30 = 3 Poles to the left of mechanism
04 = 4 poles to the right of mechanism
22 = 2 Poles to left of mechanism, 2 poles to right
40 = 4 Poles to the left of mechanism

Pistol Handles

OHB 65 J 6 E011

Handle Color
B = Black Y = Red/Yellow M = Stainless Steel

Handle Length
65 = 65mm 80 = 80mm 125 = 125mm 145 = 145m 175 = 175mm 274 = 274mm 275 = 275mm 330 = 330mm

Environmental Rating
J = 1, 3R, 12 L = 1, 3R, 12, 4, 4X

Shaft Diameter
6 = 6mm 12 = 12mm

Special Configuration
E011 = 3 position transfer switch handle
EH = Stainless Steel Hasp

① Part designation keys are provided for reference only. Not all variations or configurations are available.

Base & DIN rail mounted
30 – 1200A

For a complete assembly, please select one of each:

- 1 switch (page 19.22)
- 1 handle (page 19.30)
- 1 shaft (page 19.32)
- 1 terminal lug kit (page 19.34)

NOTE: For additional accessories, see pages 19.29 - 19.40.

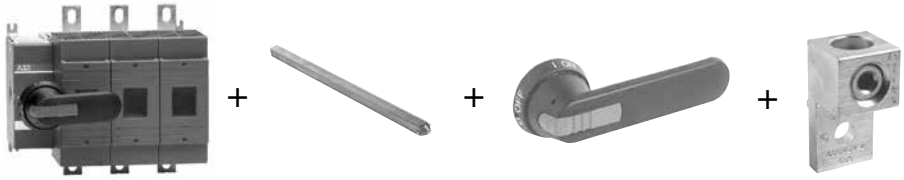

OS400J03 + OXP12X280 + OHB145J12 + OZXA-24

(Only required for 100A & above.)

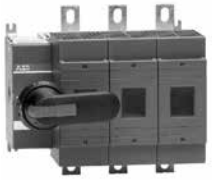

OS30FAJ12

	UL general purpose amp rating	UL Fuse Type 600V	2 Pole	3 Pole	4 Pole
			Catalog number	Catalog number	Catalog number
UL 98	30	J CC ①	— —	OS30FAJ12 OS30FACC12	OS30FAJ22F OS30FACC22F
	60	J	—	OS60GJ12 ② OS60GJ03	OS60GJ22F
	100	J	—	OS100GJ12 ② OS100GJ03 ②	OS100GJ04F
	200	J	OS200J02	OS200J03 OS200J30 OS200J12	OS200J04F OS200J13F OS200J22F
	400	J	OS400J02	OS400J03 OS400J30 OS400J12	OS400J04F
	600	J	OS600J02	OS600J03 OS600J30 OS600J12	OS600J04F
	800	L	OS800L02	OS800L03	OS800L04F
	1200	L	OS1200L02	OS1200L03	OS1200L04F

① Rejection style fuses only.
② Din Rail Mountable: 60A & 100A requires Din Rail Adapter OSGZD1

Other configurations
Side operated
30A – 400A, UL fuse class J,CC

For a complete assembly, please select one of each:
1 switch
1 handle
1 shaft
1 terminal lug

OS30FAJS30

+

OXP6X170

+

OHY65L6E00S

OS60GJS30

OS100GJS30

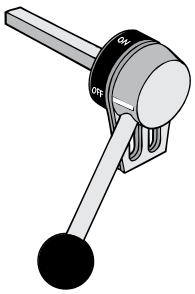

OETL-ZX74

OZXA-24

Side operated switches — 3 pole

UL general purpose amp rating	UL fuse type 600V	Maximum horsepower rating					Weight (Lbs.)	Catalog number
		Three phase						
		200V	208V	240V	480V	600V		
30	J	5	7.5	7.5	15	20	1.54	OS30FAJS30
30	CC	5	7.5	7.5	15	20	1.54	OS30FACCS30
60	J	15	15	15	30	50	3.52	OS60GJS30
100	J1	25	25	30	60	75	3.97	OS100GJS30
200	J1	50	50	60	125	150	15.21	OES200J3-S
400	J1	100	100	125	250	350	17.20	OES400J3-S

Handles

UL/NEMA type	IEC type	Color	Length (Inches/mm)	Marking	Defeatable	Padlockable	Weight	Catalog number
For use with OS30A_S30								
1, 3R, 12	IP65	Black Red/Yel	2.6/65	OFF/ON	Yes	Yes	0.29	OHB65J6E00S OHY65L6E00S
For use with OS60GJ30, OS60JS30 & OS100GJ30								
1, 3R, 12	IP65	Black Red/Yel	3.1/80	OFF/ON	Yes	Yes	0.30	OHB80J6E00S
For use with OES200J3-S & OES400J3-S								
1, 3R, 12	IP65	Black Red/Yel	4.9/145	OFF/ON	Yes	Yes	0.39	OHB145J12E00S OHY145J12E00S
		Metal			No	Yes	1.50	OETL-ZX74

Shaft

For use with:	Length (Inches/mm)	Description	Weight (Lbs.)	Catalog number
OS30AJS30 & OS30ACCS30	6.7/170	.20 x .20" (5 x 5mm)	0.08	OXP6X170
OS60GJS30 & OS100GJS30	8.3/210	.24 x .24" (6 x 6mm)	0.10	OXP6X210
OES200J3-S & OES400J3-	12.8/325	.47 X .47" (12 X 12mm)	0.90	OXP12X325

Terminal lug kits

For use with:	Wire size	Weight	Wire type	Lugs per kit	Catalog number
OS30AJS30 & OS30ACCS30	#18 – 8	—	Cu	—	Integral
OS60GJS30	#14 – 4	—	Cu	—	Integral
OS100GJS30	#14 – 2/0	0.43	Cu/Al	6	OZXA-24
OES200J3-S	#6 – 300 kcmil	0.93	Cu/Al	6	OZXA-25
OES400J3-S	#2 – 600 kcmil	3.50	Cu/Al	6	OZXA-26

Special configurations
Shaft operated flange
30A - 100A

For a complete assembly, please select one of each.

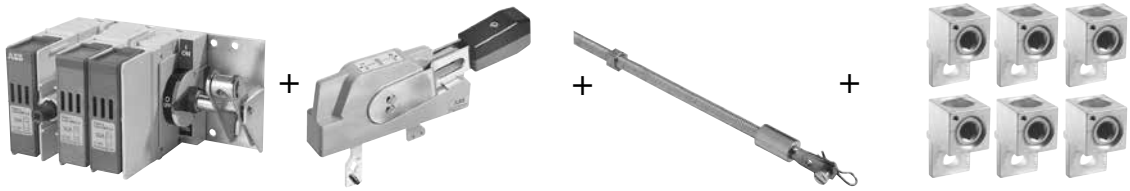

Switch + Handle + Shaft + Lug kit (as required)

OS30FAJF30

30A -100A Flange operated fusible switches (Shaft) — 3 pole

UL general purpose amp rating A	UL fuse type 600V	Maximum horsepower rating Three phase			Catalog number
		240V	480V	600V	
30	J	7.5	15	20	OS30FAJF30
30	CC	7.5	15	20	OS30FACCF30
60	J	15	30	50	OS60GJF30
100	J	30	60	75	OS100GJF30

DSFHN-HS__

Flange handles

UL/ NEMA type	Marking	Defeatable	Padlockable	Catalog number
1, 3R, 12	OFF/ON	Yes	Yes	DSFHN-HS12
4, 4X	OFF/ON	Yes	Yes	DSFHN-HS4

Shafts

For use with:	Maximum enclosure depth (inches)	Catalog number
OS30_ - OS100_	16	DSFHS-12
	21	DSFHS-17
	26.5	DSFHS-22

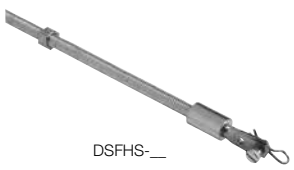

DSFHS-__

Terminal lug kits and accessories

For use on:	Description	Wire size	Wire type	Qty.	Catalog number
OS30_	Lug	#18 - #8	Cu	--	Integral
OS60_	Lug	#14 - #4	Cu	--	Integral
OS100_	Lug	#14 - 2/0	Cu/Al	6	OZXA-24
OS30_- OS100_	Aux. Contact	1 NO		1	OA1G10
	Aux. Contact	1 NC		1	OA3G01
OS30_	Adapter	Needed for mounting aux. Contacts on OS30_		1	OSZ4
OS100_	Shroud	Includes one set of 3 for use on line or load side		1	OSS160GG1L/3 OSS160GG1S/3

OZXA-24

Door hardware NEMA 12

Item	Catalog number
Safety door latch, 2 point, door less than 40” high	KDH2R
Safety door latch, 3 point, door greater than 40” high	KDH3R

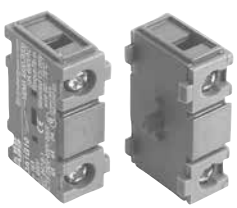

OA1G__

Flange operated fusible and non-fusible disconnect switches

ABB’s solution for complying with the NFPA79 requirements is Flange Operated Fusible and Non-fusible Disconnect Switches.

NFPA 79 changes requires main disconnecting means to be operable without the use of accessory tools or devices, independent of door position. This code also includes an interlocking provision to prevent the closing of disconnects while the enclosure door is open, unless an interlock is operated by a deliberate action.

The flange operated disconnect switches are available as ridged shaft or flexible cable operated versions. The cable operated version allows you to install the disconnect switch virtually anywhere in the enclosure depending on the length of the cable. Cables are available in lengths up to 84 inches.

The designs are cost-effective NFPA 79 solutions offering quick and easy installation.

Special configurations
Cable operated flange
30A - 800A

For a complete assembly, please select one each of the following:

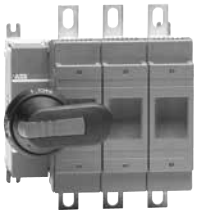
Switch

+

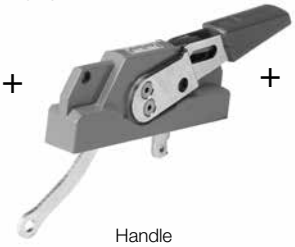
Handle

+

Cable

+

Lug kit (as required)

+

Operating mechanism

Fusible

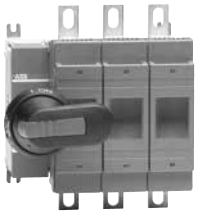
OS200J03

UL general purpose amp rating	UL fuse type 600V	Catalog number
30	J	OS30FAJ12
30	CC	OS30FACC12
60	J	OS60GJ12
60	J	OS60GJ30
100	J	OS100GJ30
200	J	OS200J30
400	J	OES400J3-FC ①
600	J	OES600J3-FC ①
800	L	OES800L3-FC ①

Flange handles — UL98; File #E101914

OHF1C12

For use with:	Environmental rating	Catalog number
OS30_12, OS60GJ12, OS60GJ30, OS100GJ30, OS200J30	NEMA 1, 3R, 12	OHF1C12
	NEMA 4, 4X	OHF1C4
OES400_, OES600_, OES800_	NEMA 4, 4X	K7FCH4

Flexible cables

OXC1L36-
OXC1L84

For use with:	Cable length (inches)	Catalog number
OS30_12, OS60GJ12, OS60GJ30, OS100GJ30, OS200J30	36	OXC1L36
	48	OXC1L48
	60	OXC1L60
	72	OXC1L72
	84	OXC1L84
OES400_, OES600_, OES800_	48	K7C048
	60	K7C060
	72	K7C072
	84	K7C084

Operating mechanisms

For use with:	Catalog number
OS30AFJ12, OS30AFCC12	MKCS2
OS60GJ12	MKCS3
OS60GJ30, OS100GJ30 , OS200J30	MKCS4
OES400 - OES800	Included

① Operating mechanism is included.

Special configurations
Cable operated flange
30A - 800A

Lug Kit

OZXA-200

Terminal lug kits

For use with	Wire size	Wire type	Description	Lugs per kit	Catalog number
OS100GJ30	#4 – 300 kcmil	Cu/Al	-	6	OZXA-24
OS200J30	#4 – 300 kcmil	Cu/Al	-	3	OZXA-200/3
	(6) #4-6 AWG	Cu/Al	Distribution lug	3	OZXA-206S
OES400	#2 - 600 kcmil	Cu/Al	-	6	OZXA-26
	#2 - 600 kcmil	Cu/Al	-	3	OZXA-26/3P
	(2) #2 - 500 kcmil	Cu/Al	Distribution lug	6	OZXA-33
OES600 - OES800	(12) #14 - 6 kcmil	Cu/Al	-	3	OZXA-175/400
	(2) #2 - 600 kcmil	Cu/Al	-	6	OZXA-27
	(2) #2 - 600 kcmil	Cu/Al	Distribution lug	3	OZXA-27/3P

Door hardware NEMA 12

Item	Catalog number
Safety door latch, 2 point, door less than 40” high	KDH2R
Safety door latch, 3 point, door greater than 40” high	KDH3R

Terminal shrouds

For use on	Description	Weight (lbs.)	Catalog number
OS100	1 Pole	0.04	OSS160T1
OS100	3 Pole	0.12	OSS160T3
OS200	3 Pole Long Type Shroud	0.2	OSS200G1L/3
OS200	3 Pole Short Type Shroud	0.13	OSS200G1S/3
OES400	3 Pole (includes one shroud for line and load side)	0.13	OESA-ZX123
OES600	3 Pole (includes one shroud for line and load side)	0.13	OESA-ZX125
OES800	3 Pole (includes one shroud for line and load side)	0.11	OESA-ZX125

Other configurations
High speed fuse pattern
Special type fuses

For a complete assembly, please select one of each:

- 1 switch body
- 1 adapter kit
- 1 shaft
- 1 handle

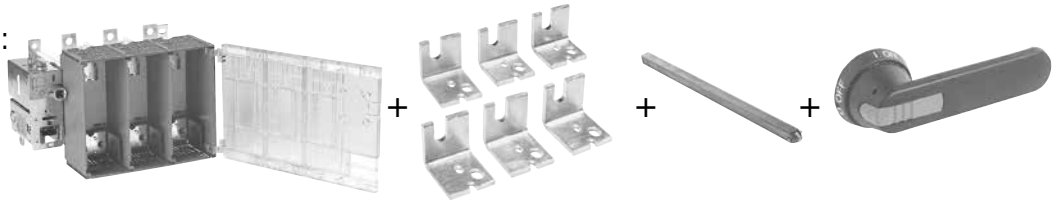

OESA_R_ OESAZX_ OXP_ OH_

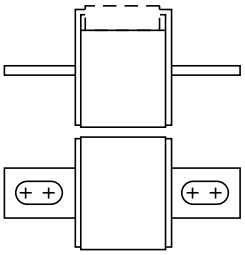

American standard

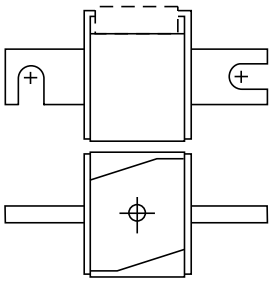

DIN 43653

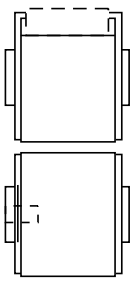

Flush end

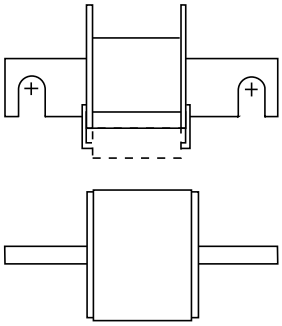

French style

Selecting switch bodies and adapter kits

Please select switch body and adapter kit according to your fuses. Switch body alone can not be used — an adapter kit is always needed.

Switch bodies – 200 A through 800 A

UL general purpose amp rating	Maximum horsepower rating three phase			Max. allowed fuse power dissipation at rated current	Weight	Catalog number
	240 V	480 V	600 V			
200	60	125	150	22W	15.21	OES200R03
400	125	250	350	45W	17.20	OES400R03
600	200	400	500	60W	37.48	OES600R03
800	250	500	600	65W	37.48	OES800R03
200	60	125	150	22W	17.4	OES200R04
400	125	250	350	45W	19.4	OES400R04
600	200	400	500	60W	46.3	OES600R04
800	250	500	600	65W	46.3	OES800R04

Fuse adapter kits — for switches OES200 – OES400

Fuse standard	For 3 pole switch Catalog number	For 4 pole switch Catalog number
American standard	OESAZX1-S4	OESAZX1-S4/4
	OESAZX1-S5	OESAZX1-S5/4
DIN80 (DIN43653)	OESAZX1-S7	OESAZX1-S7/4
DIN80 sizes 00 and 000 (DIN 43653)	OESAZX1-S9	OESAZX1-S9/4
DIN110 (DIN43653)	OESAZX1-S2	OESAZX1-S2/4
DIN140 (DIN43653)	OESAZX1-S6	OESAZX1-S6/4
Flush-end, 70mm body	OESAZX1-S8	OESAZX1-S8/4
Flush-end, 50mm body	OESAZX1-S3	OESAZX1-S3/4
French	OESAZX1-S10	OESAZX1-S10/4
French with micro switches	OESAZX1-S11	OESAZX1-S11/4

Fuse adapter kits — for switches OES600 – OES800

Fuse standard	For 3 pole switch Catalog number	For 4 pole switch Catalog number
American standard	OESAZX2-S4	OESAZX2-S4/4
DIN80, DIN 110, DIN 140 (DIN43653)	OESAZX2-S2	OESAZX2-S2/4
Flush-end, 50mm and 70mm body	OESAZX2-S3	OESAZX2-S3/4
French	OESAZX2-S5	OESAZX2-S5/4
French with micro switches	OESAZX2-S6	OESAZX2-S6/4

Handles and shafts — see pages 19.30 - 19.32.

Selecting the right fusible disconnect for HSF fuses may be difficult. Due to UL restrictions it is not possible to give a general fuse selection table for your use. Therefore we ask you to contact ABB Inc., in application issues. Information needed is nominal current of the application and catalog number of the fuse.

① Consult Factory.

Other configurations
High speed fuse pattern
Standard switches

For a complete assembly, please select one switch catalog number which includes:

Switch body + shaft + handle

Selecting switch bodies

There are some HSF fuses that fit in standard pattern fusible disconnects, no adapter kits needed.

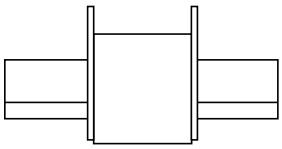

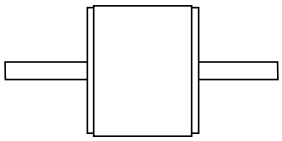

DIN 43620

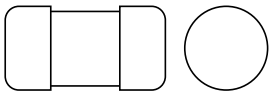

NFC Style

DIN-type fusible disconnects – 32-1200A

IEC Amp rating	AC23A operational power in kW		Fuse Type	Weight (kg)	3 Pole Catalog number	4 Pole Catalog number
	400V	500V				
32	15	18.5	DIN 000	1.3	OS32GD03	OS32GD04F
63	30	37	DIN 000	1.3	OS63GD03	OS63GD04F
160	75	90	DIN 000, 00	1.5	OS160GD03	OS160GD04F
250	145	170	DIN 0, 1	4.3	OS200D03	OS200D04F
400	230	280	DIN 0, 1, 2	7.1	OS400D03	OS400D04F
630	355	450	DIN 3	13.6	OS630D03	OS630D04F
800	450	560	DIN 3	13.6	OS800D03	OS800D04F
1200	560	710	DIN 4	46	OS1250D03	OS1250D04F

NFC-style Fusible disconnects – 25-125A

IEC Amp rating	AC23A operational power in kW		Fuse Type	Weight (kg)	3 Pole Catalog number	4 Pole Catalog number
	400V	500V				
25	11	15	NFC 10x38	0.7	OS25FF1210	OS25FF2210F
32	15	18.5	NFC 14x51	0.7	OS32FF1214	OS32FF2214F
50	22	30	NFC 14x51	1.3	OS50GF12	OS50GF22F
125	55	75	NFC 22x58	1.5	OS125GF12	OS125GF22F

BS-types fusible disconnects – 32-1200A

IEC Amp rating	AC23A operational power in kW		Fuse Type	Weight (kg)	3 Pole Catalog number	4 Pole Catalog number
	400V	500V				
32	15	18.5	A2,A3	1.3	OS32GB03	OS32GB04N1
63	30	37	A2,A3	1.3	OS63GB03	OS63GB04N1
100	55	55	A2, A3, A4	1.5	OS100GB03	OS100GB04N1
160	75	90	A2, A3, A4	1.5	OS160GB03	OS160GB04N1
200	145	170	B1-B2	3.3	OS200B03	OS200B04N2
400	230	280	B1-B4	7.1	OS400B03	OS400B04N2
630	355	450	C1-C2	13.6	OS630B03	OS630B04N2
800	450	560	C1-C3	13.6	OS800B03	OS800B04N2
1250	560	710	D1	46	OS1250B03	OS1250B04N2

Non-fusible & fusible disconnect switch Accessories

Disconnect switch accessories
Non-fusible & fusible

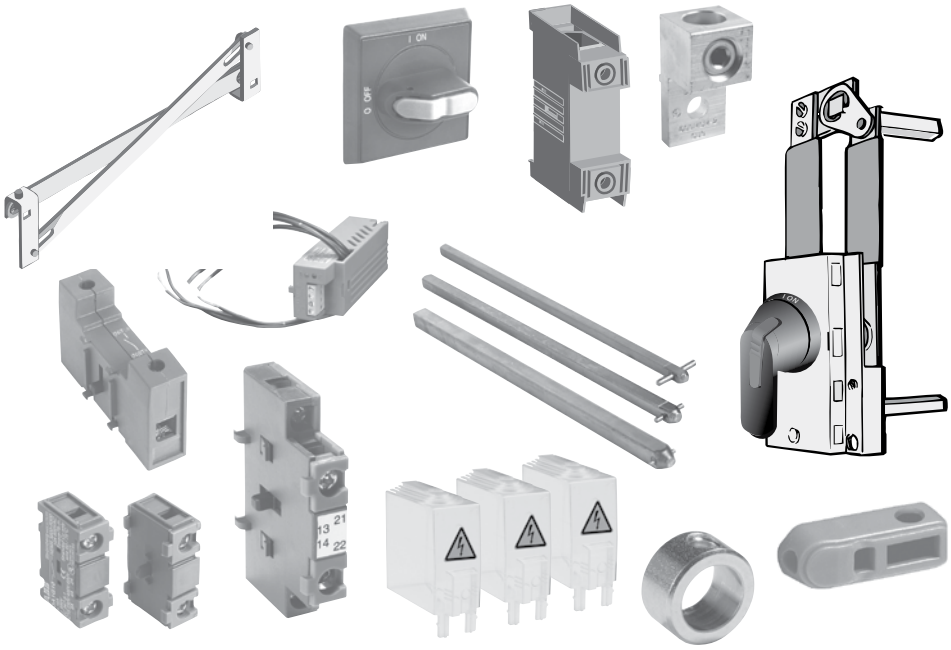

19

Standard handles & shafts ①②

OHBS2AJ1

OHB__J6

OHY__J6

YASDA-8

OHM125L12

OHB4

Recommended handles & shafts

Amperes	Shaft diameter	Recommended standard pistol handle length	Maximum recommended shaft length
16 - 100	6x6 mm - .24 x .24"	45 - 65 mm	290 mm
200	6x6 mm - .24 x .24"	65 - 80 mm	290 mm
400 - 1200	12x12 mm - .47 x .47"	125 - 274 mm	595 mm
1600 - 3150	12x12 mm - .47 x .47"	175 - 330 mm	595 mm

Selector handles — for use with .24 x .24" (6mm) OXS6X_shafts

UL/NEMA Type	IEC type	Color	Marking	Defeatable	Padlockable	Weight (lbs)	Catalog number
1	IP54	Black	O/I & Off/On	—	—	0.09	OHBS1AH1 ③
				—	Yes	0.12	OHBS3AH1 ③
1, 3R, 12	IP65	Black	O/I & Off/On	—	Yes	0.16	OHBS2AJ1 ③
				Yes	Yes	0.16	OHBS2AJ ③

Pistol handles — for use with .24 x .24" (6mm) OXP6X_ shafts

UL/NEMA Type	IEC type	Color	Marking	Length in/mm	Defeatable	Padlockable	Weight (lbs)	Catalog number
1, 3R, 12	IP65	Black	O/I & Off/On	2.6/65	Yes	Yes	0.29	OHB65J6
			Off/On/Test	2.6/65	Yes	Yes	0.29	OHB65J6T ④
			O/I & Off/On	3.1/80	Yes	Yes	0.30	OHB80J6
1, 3R, 12, 4, 4X	IP66	Black	O/I & Off/On	2.6/65	Yes	Yes	0.29	OHB65L6
				3.1/80	Yes	Yes	0.30	OHB80L6
1, 3R, 12, 4, 4X	IP66	316L Stainless steel	O/I & Off/On	2.6/65	Yes	Yes	1.60	OHM65L6
1, 3R, 12	IP65	Black w/ 316 stainless hasp	O/I & Off/On	2.6/65	Yes	Yes	0.31	OHB65J6EH
1, 3R, 12, 4, 4X	IP66	Black w/ 316 stainless hasp	O/I & Off/On	2.6/65	Yes	Yes	0.31	OHB65L6EH

Pistol handles — for use with .47 x .47" (12mm) OXP12X_ shafts

UL/NEMA Type	IEC type	Color	Marking	Length in/mm	Defeatable	Padlockable	Weight (lbs)	Catalog number
1, 3R, 12	IP65	Black	O/I & Off/On	4.9/125	Yes	Yes	0.39	OHB125J12
		Black		5.7/145	Yes	Yes	0.39	OHB145J12
		Black		6.9/175	Yes	Yes	0.41	OHB175J12
		Black T-Handle		7.9/200	Yes	Yes	0.88	OHB200J12P
		Black Steel Reinforced		10.8/274	Yes	Yes	1.19	OHB274J12
		Black Steel Reinforced		13/330	Yes	Yes	1.28	OHB330J12
1, 3R, 12, 4, 4X	IP66	Black	O/I & Off/On	5.7/145	Yes	Yes	0.39	OHB145L12
		Black		6.9/175	Yes	Yes	0.41	OHB175L12
		Black T-Handle		7.9/200	Yes	Yes	0.88	OHB200L12P
		Black Steel Reinforced		10.8/274	Yes	Yes	1.19	OHB274L12
		Black Steel Reinforced		13/330	Yes	Yes	1.28	OHB330L12
1, 3R, 12, 4, 4X	IP65	Metal	Off/On	8.7/220	--	Yes	1.50	YASDA-8
1, 3R, 12, 4, 4X	IP66	316L Stainless Steel	O/I & Off/On	4.9/125	Yes	Yes	1.7	OHM125L12
				6.9/175	Yes	Yes	1.8	OHM175L12
				10.8/275	Yes	Yes	2.1	OHM275L12
		T-Handle		7.9/200	Yes	Yes	0.88	OHM200L12P
1, 3R, 12	IP65	Black w/ 316 stainless hasp	O/I & Off/On	4.9/125	Yes	Yes	0.44	OHB125J12EH
				6.9/175	Yes	Yes	0.76	OHB175J12EH
1, 3R, 12, 4, 4X	IP66	Black w/ 316 stainless hasp	O/I & Off/On	4.9/125	Yes	Yes	0.44	OHB125L12EH
				6.9/175	Yes	Yes	0.76	OHB175L12EH

① Red/Yellow handles are available by substituting the OHB prefix with OHY.
② All handles are plastic unless otherwise noted as metal or stainless steel.
③ Not recommended for use on OT30/60/100.
④ The OS30_ switch has a TEST position, accessed by rotating the mechanism 45 degrees counterclockwise from the OFF position. In the TEST position, optional auxiliary contacts, OA4B1C, are actuated but the main switch contacts are not.

Standard handles & shafts ②

Direct mount handle for non-fusible switches

Description	For use on	Color	Padlockable	Shaft through handle	Weight	Shaft catalog number	Switch catalog number
Mounts directly on switch. No shaft necessary	OT16-40	Black	Yes	Yes	0.05		OHBS12 ③ CXBY68989
	OT63-80 OT30/60/100	Black	Yes No Yes	Yes	0.05		OHBS2③ CXBY68998 CXBY68419/6/2M
Up to 3 padlocks in OFF-position, includes shaft and mechanism	OT200	Black	Yes	No	0.22		OTV250EK
	OT400	Black	Yes	Yes	0.44		OTV400EK
	OT600	Black	Yes	Yes	0.66		OTV800EK
	OT800	Black	Yes	Yes	0.30		OTV1000EK
	OT1200	Black	Yes	Yes	0.30		OTV1000EK
Mounts on shaft	OETL-NF1600-OETL-NF3150	Metal	No	Yes	0.80		YASDA-34

Direct mount handle for fusible switches

For use on	Description	Marking	Color	Padlockable	Weight	Catalog number
OS30	No shaft required	O/I/Test	Black	Yes	0.10	OHBS5
OS60 - OS200	No shaft required	O/I	Black	Yes	0.30	OSV200BK
OS400	No shaft required	O/I	Black	Yes	0.30	OSV400BK
OS600	No shaft required	O/I	Black	Yes	0.30	OSV800BK
OS400-600, OES800	Mounts on 12mm shaft	—	Metal	No	0.78	YASDA-33

3 Position selector handles for double throw switches

UL/NEMA Type	IEC Type	Markings	Color	Defeatable	Padlockable	Weight (Lbs.)	Catalog number
1, 3R, 12	IP65	I/0/II, ON/OFF/ON	Black	Yes	Yes	0.16	OHBS2AJE011

3 Position pistol handles for double throw switches

UL/NEMA Type	IEC Type	Markings	Color	Defeatable	Padlockable	Weight (Lbs.)	Catalog number	Catalog number
1, 3R, 12	IP65		Black	Yes	Yes	0.29	OHB65J6E011	OHB145J12E011
1, 3R, 12, 4, 4X	IP66	I/0/II, ON/OFF/ON	Black	Yes	Yes	0.29	OHB65L6E011	OHB145L12E011
1, 3R, 12	IP65		Black	Yes	Yes	0.3	OHB80J6E011	OHB175J12E011
1, 3R, 12, 4, 4X	IP66		Black	Yes	Yes	0.3	OHB80L6E011	OHB175L12E011

Selector handles for door mounted switches ①

UL/NEMA Type	IEC Type	Color	Defeatable	Padlockable	Weight (lbs)	Catalog number
Snap-on mounting - for use on OT16FT3 - OT40FT3						
1	IP54	Black	—	—	0.10	OHBS1PH
1	IP54	Black	—	Yes	0.13	OHBS3PH
1, 3R, 12	IP65	Black	—	Yes	0.17	OHBS2PJ
Screw mounting - for use on OT16FT3 - OT100FT3. For OT30, OT60, and OT100 use OH_ _2_ only						
1	IP54	Black	—	—	0.11	OHBS1RH
1	IP54	Black	—	Yes	0.14	OHBS3RH
1, 3R, 12	IP65	Black	—	Yes	0.18	OHBS2RJ

① Red/Yellow handles are available by substituting the OHB prefix with OHY.
② All handles are plastic unless otherwise noted as metal or stainless steel.
③ Suitable for 3 & 4 pole versions only. Not for use with 6 or 8 pole or double throw configurations.

Standard handles & shafts

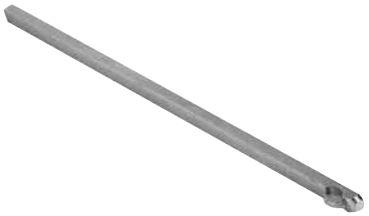

OXS6X__

OXP6X
OXP12X_

Shafts for use with selector handles – .24 x .24" (6x6 mm)

Shaft length (in/mm)	Maximum Mounting Depth (inches) ①					Weight	Catalog number
	OT16F3, OT25F3, OT40F3		OT63F3, OT80F3		OS30 ②		
	OH_1_ & OH_3_	OH_2_	OH_1_ & OH_3_	OH_2_			
3.3/85	5.0	4.3	5.6	5.0	–	0.07	OXS6X85
4.1/105	5.8	5.1	6.4	5.8	–	0.07	OXS6X105
4.7/120	6.4	5.8	7.0	6.4	–	0.08	OXS6X120
5.1/130	6.7	6.1	7.4	6.8	5.6	0.08	OXS6X130
7.1/180	8.7	8.1	9.4	8.7	6.1	0.11	OXS6X180
9.8/250	11.5	10.8	12.1	11.5	10.3	0.13	OXS6X250
13/330	14.6	14.0	15.3	14.7	13.4	0.17	OXS6X330

Shafts for use with pistol handles – .24 x .24" (6x6 mm)

Shaft length (in/mm)	Maximum Mounting Depth (inches)								Weight	Catalog number
	OT16F3 - OT40F3	OT63F3 - OT80F3	OT30F3/60F3/100F3	OT200	OS30	OS60	OS100	OS200		
5.2/130	5.9	6.4	6.7	6.5	–	–	–	–	0.08	OXP6X130
5.9/150	6.7	7.4	7.0	7.2	8.9	9.7	9.8	9.9	0.09	OXP6X150
8.3/210	9.1	9.7	9.8	9.6	9.7	12.1	12.2	13.0	0.13	OXP6X210
11.4/290	12.2	12.8	12.9	12.7	13.4	15.2	15.3	–	0.18	OXP6X290
14.2/360	14.9	13.8	15.6	15.5	18.7	12.9	18.0	–	0.23	OXP6X360
16.9/430	17.6	18.3	18.3	18.2	22.6	20.6	20.7	–	0.27	OXP6X430

Shafts for use with pistol handles – .47 x .47" (12x12 mm)

Shaft length (in/mm)	Maximum Mounting Depth (inches)						Weight	Catalog number
	OT400	OT600	OT800 - OT1200	OETL-NF1600 - OETL-NF3150	OS400	OS600 - OS1200		
11.0/280	13.3	14.6	14.5	—	13.8	14.9	0.77	OXP12X280
12.8/325	15.0	16.4	16.3	20.9	15.6	16.7	0.90	OXP12X325
15.6/395	20.5	19.1	19.1	23.6	18.3	19.4	1.10	OXP12X395
18.3/465	21.9	21.8	21.9	26.3	21.0	22.1	1.32	OXP12X465
21.1/535	22.8	24.6	24.6	29.1	23.8	24.8	1.54	OXP12X535

① Mounting depth is distance from the outside of the door to the disconnect switch mounting plate. Shaft can be cut to desired length.
② Selector handles and shafts are not recommended for use with fusible switches over 30A.

Auxiliary contacts

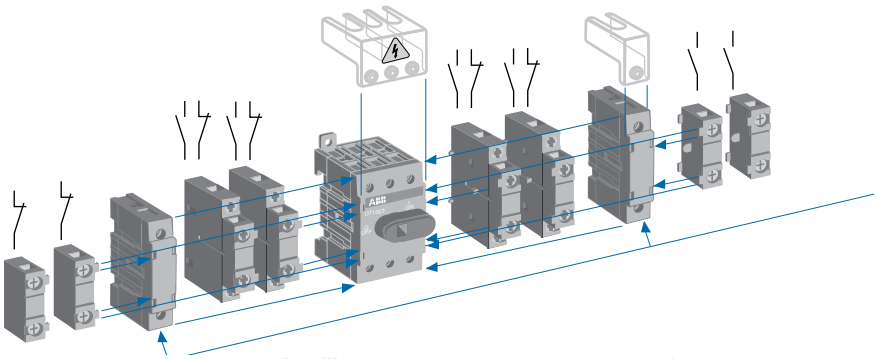

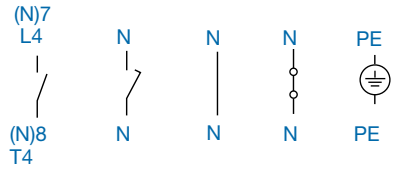

Auxiliary contacts — snap-on mounting ①

Description	For Use On	Weight	AC Thermal amp rating	AC rated voltage	Catalog number
Form C 1 N.O. & 1 N.C.	OS30 ②	0.04	6	250	OA4B1C
1 N.O.	OT16-100, OT200-1200 OS30-OS1200	0.07	10	600	OA1G10
1 N.C.	OT16-100	0.07	10	600	OA1G01
	OT200-1200 OS30-OS1200	0.07	10	600	OA3G01
1 N.O. & 1 N.C.	OT16-100	0.07	10	600	OA2G11
Module for auxiliary contacts	OS30	0.09	–	–	OSZA
	OT200-1200 OS200-OS1200	0.1	–	–	OEA28 ④

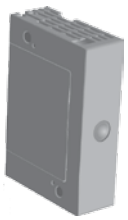

OEA28

Auxiliary contacts — front mounting ③

Description	For Use On	Weight	AC Thermal amp rating	AC rated voltage	Catalog number
1 N.O. + 1 N.C.	OETL-NF1600 through OETL-NF3150	0.2	10	600	OZXK-1
2 N.O. + 2 N.C.		0.26	10	600	OZXK-2
4 N.O. + 4 N.C.		0.4	10	600	OZXK-3
2 N.O.		0.18	10	600	OZXK-4
4 N.O.		0.25	10	600	OZXK-5
8 N.O.		0.4	10	600	OZXK-6

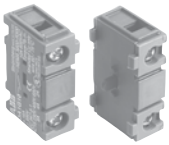

OA1G__

Auxiliary contacts — snap-on mounting for double throw

Description	For Use On	Weight (Lbs.)	AC Thermal amp rating	AC rated voltage	Catalog number
1 N.O.	OT16-100_C	0.7	10	600	OA7G10
1 N.C.	OT16-800_C	0.7	10	600	OA3G01
1 N.O.	OT200-800_C	0.7	10	600	OA1G10

OA2G11

Mounting & installation considerations

Non-Fusible

OT16-100	OA1G10 (1 N.O.) mounts on right side of switch only OA1G01 (1 N.C.) mounts on left side of switch only OA2G11 (1 N.O. & 1 N.C.) mounts on left of right side of switch Maximum two contacts on each side of switch
OT200-1200	Maximum 8 auxiliary contact blocks with the OEA28 module Maximum 4 auxiliary contact blocks mounting under the mechanisms

Fusible

OS30	Form C contacts mount directly to switch Maximum two Form C contacts OA1G10 (1 N.O.) + OA3G01 (1 N.C.) require mounting base Maximum 6 OA1G10 + OA3G01 contacts with mounting base OSZ4
OS60-1200	Mounting to left side of switch with OEA28 module: Maximum 8 contact blocks Mounting under mechanism cover: Maximum 4 contact blocks

① UL file #E83510
② Not suitable for use on cable operated flange version of OS100
③ UL File #E5707
④ Maximum 8 contact blocks (N.O. or N.C.) with the OEA28 module.

Terminal lugs

OZXA-400

OZXA-27

OZXA-30

OZXA-32

OZXA-175/400

OZXA-24

OZXA-27

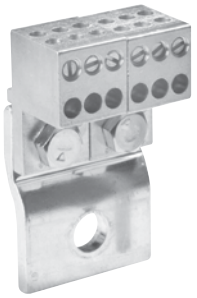
OZXA-175/400

Terminal lugs ①

For Use On	Wire Size	Wire Type	Lugs/Kit	Weight (lbs)	Catalog number
OS100	#14-2/0	Cu/Al	6	0.50	OZXA-24 ②
OT200/OS200	#4 - 300 kcmil #4 - 300 kcmil (6) 14-6 AWG (6) 14-6 AWG	Cu/Al	6 3 3 3	0.50 0.25 0.25 0.25	OZXA-200 OZXA-200/3 OZXA-206T ④ OZXA-206S ④
OT/OS400	#2 - 600 kcmil #2 - 600 kcmil (2) #4 - 300 kcmil (6) #14 - 6 AWG	Cu/Al	6 3 6 3	0.50 0.25 0.50 0.50	OZXA-400 OZXA-400/3P OZXA-402 OZXA-406
OT600 , OS600 - OS800	(2) #2 - 600 kcmil (2) #2 - 600 kcmil	Cu/Al	6 3	0.50 0.50	OZXA-800 OZXA-800/3
OT800, OT1200 & OS1200	(4) #2 - 600 kcmil (4) #2 - 600 kcmil	Cu/Al	6 3	6.90 3.45	OZXA-1200 OZXA-1200/3
OETL-NF1600	(4) #2 - 600 kcmil (4) #2 - 600 kcmil (8) 2/0 + (2) #2 - 600 kcmil ③	Cu/Al	6 3 3	10.44 5.22 10.44	OZXA-28 OZXA-28/3 OZXA-32
OETL-NF2000-3150	(8) #2 - 600 kcmil	Cu/Al	12	20.88	OZXA-28/2

Terminal lug kits for double throw switches

For Use On	Wire Size	Wire Type	Lugs/Kit	Weight (Lbs)	Catalog number
OT200_C	#4 - 300kcmil #4 - 300kcmil	Cu/Al	9 12	0.5 0.25	OZXA-200/9 OZXA-200/12
OT400_C	#2 - 600kcmil #2 - 600kcmil	Cu/Al	9 12	0.5 0.25	OZXA-400/9 OZXA-400/12
OT600_C	(2) #2 - 600kcmil (2) #2 - 600kcmil	Cu/Al	9 12	0.5 0.5	OZXA-800/9 OZXA-800/12
OT800_C	(4) #2 - 600 kcmil (2) #2 - 600 kcmil Cu/Al	Cu/Al	9 12	0.5 0.5	OZXA-1200/9 OZXA-1200/12

① Lugs are integral to the switch for 16-125A. No separate lug kit accessory is required.
② Not suitable for use on cable operated flange version OS100.
③ A load side distribution lug eliminates the need to purchase, install and wire a separate distribution block.
④ Comes with OZXA-175 terminal lugs and shrouds.

Terminal shrouds

OTS250G1L/3

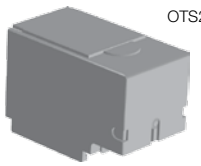

OTS250G1S/3

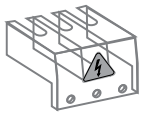

OTS40T3
OTS80T3
OTS125T3

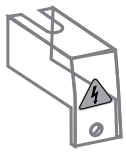

OTS40T1
OTS80T1
OTS125T1

OSS160T3

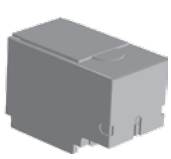

OSS200G1S/3

OSS200G1L/3

Terminal shrouds for non-fusible

Description	For Use On	Weight	Catalog number
3 pole includes one shroud for line or load side	OT16-OT40 ② OT63-OT80 ② OT30-OT100 ②	0.02 0.02 0.02	OTS40T3 OTS63T3 OTS125T3
4th pole includes one shroud for line or load side	OTPS40FPN1 ② OTPS80FP ② OTPS125FP ②	0.03 0.03 0.03	OTS40T1 OTS80T1 OTS125T1
3 pole long type shrouds	OT200	0.12	OTS250G1L/3
3 pole short type shrouds		0.13	OTS250G1S/3
4 pole long type shrouds		0.26	OTS250G1L/4
4 pole short type shrouds		3.18	OTS250G1S/4
3 pole includes one shroud for line or load side ①	OT400 OT600	0.33 0.33	OTS403 OTS603
3 pole includes one shroud for line or load side ①	OT800 OT1200	0.88 1.2	OTS803 OTS1203

Terminal shrouds for fusible

Description	For Use On	Weight (Lbs.)	Catalog number
Terminal shroud for one pole Terminal shroud for 3 poles	OS100 OS100	0.04 0.04	OSS160GG1L/3 OSS160GG1S/3
3 pole long type shrouds 3 pole short type shrouds 4 Pole long type shrouds 4 pole Short type shrouds	OS200 OS200 OS200 OS200	0.20 0.13 0.26 0.18	OSS200G1L/3 OSS200G1S/3 OSS200G1L/4 OSS200G1S/4
3 Pole includes one shroud for line or load side ①	OS400 OS600	0.13 0.11	OSS403 OSS603
3 pole short type shrouds 3 pole long type shrouds 4 pole short type shrouds 4 pole long type shrouds	OS800	0.47 1.54 0.62 1.54	OSS800G1S/3 OSS800G1L/3 OSS800G1S/4 OSS800G1L/4
3 pole short type shrouds 3 pole long type shrouds 4 pole short type shrouds 4 pole long type shrouds	OS1200	0.88 2.12 1.15 2.2	OSS1250G1S/3 OSS1250G1L/3 OSS1250G1S/4 OSS1250G1L/4

① For 4 pole shrouds, please consult factory.
② ABB OT16 - OT100 switches are IP20 touchsafe as standard. Terminal shrouds provide an extra degree of protection.

Additional poles

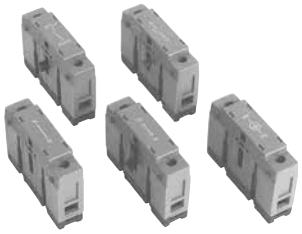
OTP_40FP

OTP_80FP

OTP_125FP

Additional poles for non-fusible ①

Power poles - Only one power pole per switch: mounts on left or right side of switch. (OTPS40FPN1 mounts to left side only.)

Description	For use on	Weight	AC Thermal amp rating	AC rated voltage	Catalog number
(N)7 L4 I (N)8 T4 Fourth Pole	OT16-OT40 OT30-OT60 OT63-OT80 OT100	0.07 0.13 0.13 0.31	40 60 80 100	600	OTPS40FPN1 OTPS60FP OTPS80FP OTPS125FP
N I N Late-break/ early-make	OT16-OT40 OT30-OT60 OT63-OT80 OT100	0.07 0.13 0.13 0.31	40 60 80 100	600	OTPL40FP OTPL60FP OTPL80FP OTPL125FP

Terminal poles - Switch accepts one terminal pole per side: mounts on left or right side of switch

Description	For use on	Weight	AC Thermal amp rating	AC rated voltage	Catalog number
N N Solid neutral	OT16-OT40 OT30-OT60 OT63-OT80 OT30-OT100	0.07 0.13 0.13 0.31	40 60 80 100	600	OTPN40FP OTPN60FD OTPN80FP OTPN125FP
N N Detachable Neutral	OT16-OT40 OT30-OT60 OT63-OT80 OT100	0.07 0.13 0.13 0.31	40 60 80 60	600	OTPD40FP OTPD60FP OTPD80FP OTPD125FP
PE PE Ground Terminal	OT16-OT40 OT30-OT60 OT63-OT80 OT100	0.07 0.13 0.13 0.31	40 60 80 100	600	OTPE40FP OTPE60FP OTPE80FP OTPE125FP

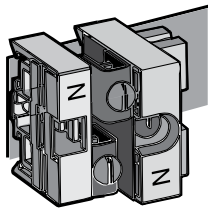

OESA-ZX171

Additional poles for fusible

Description	For use on	Weight (Lbs.)	AC Thermal amp rating	AC rated voltage	Catalog number
Detachable neutral mounts on side of switch or DIN rail	OS30 OS60 OS100	0.45 0.13 0.31	30 63 125	600 600 600	OESA-ZX171 OSZ1 OSZ2

① Switches accept only one power pole or one terminal pole per side. Only one power pole per switch.

Fuse monitors & carriers

OFM_

OSC60J_

CXBY68362

Fuse monitors

Blown fuse indicators/monitors

For Use With	Rated Voltage	Weight (lbs)	Catalog number
OS30-1200	100-240 380-600	0.31 0.31	OFM240 OFM600

Suitable for 1 or 3 phase circuits. Includes 1 N.O. and 1 N.C. auxiliary contacts and red & green LED lights for indication.

Fuse Monitor Mounting Accessories

For Use With	Crimp Terminal size (mm)	Catalog number
OS30-200	2.8-0.8	OFMZX2
OS400-1200 Includes 6 crimp terminals	6.3-0.8	OFMZX4

Fuse carriers/covers

Description	For Use on	Catalog number
CC fuse carrier (Qty. 1) J fuse carrier (Qty. 1) Solid link carrier (Qty. 1)	OS30AFCC_ OS30AFJ_ OS30_	OESAZD48 OESAZD28 OESAZD55

Shorting bars for fusible switches

Description	For Use On	AC thermal amp rating	AC rated voltage	Catalog number
Dummy Fuse	OS60	60	600	OESA-ZD54
Solid links: metal strap	OS100 OS200	100 400	600 600	OESA-ZS36 OESA-ZK98

Miscellaneous accessories
Replacement parts

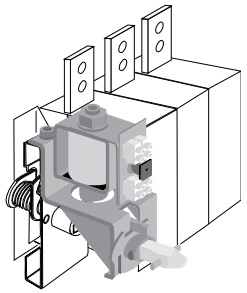

OETL-ZT80_

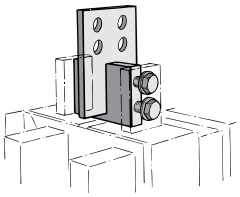

OETL-ZX115

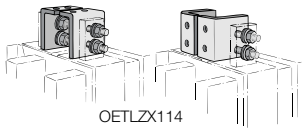

OETLZX114

OTZS2

Miscellaneous accessories

Shaft accessories

Accessory Type	Description	For Use On	Weight	Catalog number
Shaft Adapter	Adapts one end of a 6mm shaft to 12mm (use with shaft extension coupler)	6mm shafts	0.20	OETL-ZK19
Shaft Extension Coupler	Joins two shafts together for applications where extended length is required	6mm shafts 12mm shafts	0.26 0.26	OESA-ZX167 OETL-ZX95
Shaft Guide	Fits all pistol grip handles, mounts on the inside of the enclosure door with provided hardware	pistol handles	-	OHZX10

Busbar connections

Accessory Type	Description	For Use On	Weight	Catalog number
Busbar Connections	Vertical, back or edgewise mounting ①	OETL-NF1600 – 3150	46.2 31.0	OETL-ZX115 OETL-ZX114

Locking accessories

Accessory Type	Description	For Use On	Weight	Catalog number
Cam Attachment	For Kirk Key, Castell, Low & Fletcher and Ronis interlock. For adapting to the interlock system. The interlock is not included.	OS60-OS200	0.25	OETL-ZW16
		OS400-OS1200	0.29	OETL-ZW5
Electrical Interlock	Closed circuit principle for interlocking the switch movement. When the coil circuit is dead, A-types cannot be operated to O-position and L-types cannot be operated to ON- or OFF-position. Coil voltages 110VAC, 220 VAC, 24VDC, 48VDC, 60VDC, 110VDC, 220VDC, P - 15W U = 0.7 - 1.1 Un (U = coil voltage, Un = nominal voltage)	OETL-NF800 – 3150A, OES800	2.42	OETL-ZT80AΔ OETL-ZT80LΔ

Δ = Coil Voltage

Replacement parts

Accessory Type	Description	For Use On	Catalog number
Non-fusible			
Metal collar	Replaces original black knob for locking shaft in place	OT16-200, OS30-200	OTZS2
Set screw	Set screw for use with knob or collar	OT16-200 OS30-200	FLSWM5X8AX
Shaft set screw	Shaft set screw, bag of 10	OT400-1200	OZX1
Fusible			
Terminal cover	Covers terminal below fuse carrier	OS30	CXBY67121
Phase barrier	–	OS200	CXBY68794
Shaft Set Screw	–	OS30_	FLSWM5X8AX
	Bag of 10	OS400-1200	OZX1
Fuse covers	–	OS100GJ_	CXBY69058 CXBY69072

① Vertical busbar is provided as standard on OETL-NF1600 through OETL-NF3150 switches.

Conversion, transfer & bypass mechanisms
Mechanical interlocks

Conversion mechanisms

Mechanism Type	For use on	Weight	UL/Nema Type	Catalog number
6 or 8 pole mechanisms	OT16-100 OT160 OS30-200, OT200 OT400 – OETL-NF1200	0.33 1.52 1.52 2.42	- - - -	OTZW8 OETL-ZK19 OESA-ZW2 OETL-ZW9
Double throw mechanisms	OT16 - 160	2.20	1, 3R, 12 1, 3R, 12, 4, 4X	OESA-ZW1 OESA-ZW1X
	OT200 OS30-200	2.20	1, 3R, 12 1, 3R, 12, 4, 4X	OTZW25 OTZW25X
	OT400 – OETL-NF1200	10.10	1, 3R, 12, 4, 4X	OETL-ZW12
Bypass mechanisms	OT16-OT100	1.54	1, 3R, 12 1, 3R, 12, 4, 4X	OTZW17 OTZW17X
	OT200, OS30-200	7.28	1, 3R, 12	OTZW26
	OT400 – OETL-NF1200	8.81	1, 3R, 12, 4, 4X	OETL-ZW13
Mechanical interlock mechanisms	OT16-OT100 OT160-200, OS30-200 OT400 – OETL-NF800 OETL-NF1200 – OETL-NF3150	0.33 0.55 1.26 2.64	- - - -	OTZW24 OTZW10 OETL-ZW3 OETL-ZW15

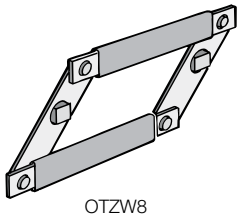

OTZW8

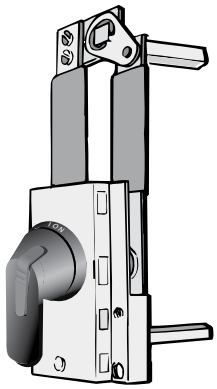

OTZW6

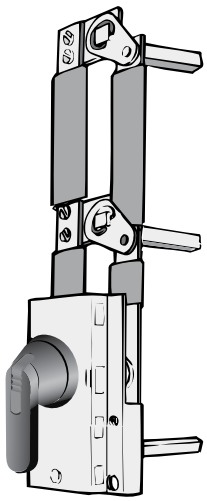

OTZW17

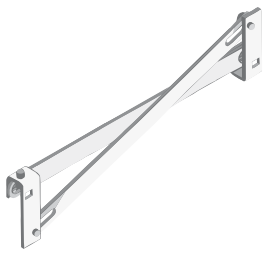

OETL-ZW24

6 or 8 pole

6 (8) pole mechanism allows two switches controlled by one handle to open or close simultaneously.
Equipment required for a complete installation:
- One conversion mechanism
- Two disconnect switches (see page 19.11)
- One handle① (see page 19.30)
- Two shafts (see page 19.32)

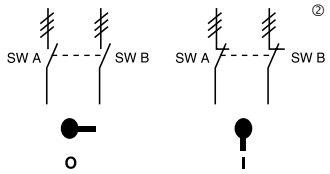

	POS. O	POS. I
SW. A	O	X
SW. B	O	X

X = Closed
O = Open

Transfer

Transfer mechanism manually transfers between two power sources using two switches and a center OFF position.
A 3-position handle is included.
Shafts included. Equipment required for a complete installation:
- One conversion mechanism
- Two disconnect switches (see page 19.11.)

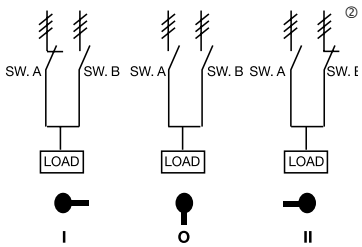

	POS. I	POS. O	POS. II
SW. A	X	O	O
SW. B	O	O	X

X = Closed
O = Open

Bypass

Bypass mechanism operates three switches: Two switches in series and one changeover switch to allow power bypass.
A 3-position handle is included.
Shafts included.Equipment required for a complete installation:
- One conversion mechanism
- Three disconnect switches (see page 19.11.)

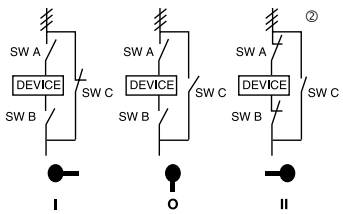

	POS. I	POS. O	POS. II
SW. A	O	O	X
SW. B	O	O	X
SW. C	X	O	O

X = Closed
O = Open

Mechanical interlock

Mechanical interlock mechanism prevents both switches from being in the ON position at the same time.
Equipment required for a complete installation:
- One conversion mechanism
- Two disconnect switches (see page 19.11)
- Two handles (see page 19.30)
- Two shafts (see page 19.32)

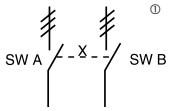

	SW. A POS. I	SW. B POS. I
SW. A	X	O
SW. B	O	X

X = Closed
O = Open

① OT16E3 – OT32E3 can use a selector or pistol handle. All other sizes must use a pistol handle.
② ⫫ = Three poles

Notes

Enclosed disconnect switches

16A – 3150A Non-fusible
30A – 1200A Fusible

eOT, NF and FJ's meet customer requirements in terms of safety, ease of installation, space savings and operational convenience. They are available in a wide range of amperage ratings, are UL approved and NEMA rated to satisfy rugged industrial environments.

Enclosed Disconnect switches

General information
Non-fusible, fusible & lockable

Non-fusible

Snap on accessories include additional poles, auxiliary contacts, etc.

Enclosures available in plastic, metal, or stainless steel in NEMA 1, 3R, 12, 4X, 7 & 9 environmental categories

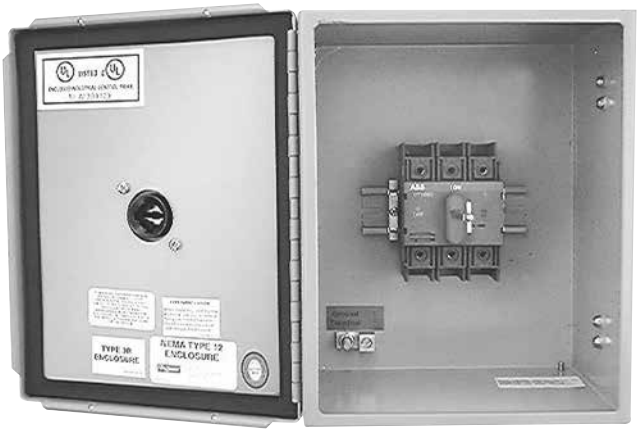

Modern appearance

Quick make, quick brake mechanism

Heavy duty disconnect, 600VAC

Extremely compact size

Finger-proof construction. No hazardous exposed parts

3/4/6/8 pole constructions; transfer switches and by-by-pass switches available

Fusible

Snap on accessories include fuse monitors, auxiliary contacts, etc.

Enclosures available in plastic, metal, or stainless steel in NEMA 1, 3R, 12, 4X, 7 & 9 environmental categories

Modern appearance

Quick make, quick brake mechanism

Heavy duty disconnect, 600VAC, 200kA, I_{SC}

Extreme compact size as fuse carriers are decked above contacts

Double contacts enabling feed from any direction and preventing back feed

Finger-proof construction. No hazardous exposed parts

3/4/6/8 pole constructions; transfer switches and by-by-pass switches available

Lockable

Clear position indications:
- I-ON
- O-OFF

Door interlocked when handle padlocked to OFF position

Handle padlockable with up to three padlocks

Door interlocked when handle is in ON position. Door interlock can be defeated by authorized personnel.

Pilot devices can be added

General information
Non-fusible, 16A - 3150A
Fusible, 30-1200A

Switch ratings, 16 – 3150 Amps, 600V

	UL General purpose amp rating	Maximum horsepower rating							Wire size for terminal lugs	For wire type	Approval
		Single phase			Three phase						
		120V	200V	240V	200V – 208V	240V	480V	600V			
UL 508	16	1	2	2	3	5	10	10	#18 – 8	Cu	UL
	25	1.5	3	3	7.5	7.5	15	20	#18 – 8	Cu	UL
	40	2	5	5	10	10	20	25	#18 – 8	Cu	UL
	60	2	5	5	15	15	30	30	#14 – 1	Cu	UL
	80	2	5	5	20	20	40	40	#14 – 1	Cu	UL
UL 98	30	2	5	5	10	10	20	30	#14 – 4	Cu	UL
	60	3	7.5	7.5	20	20	40	40	#14 – 4	Cu	UL
	100	5	15	15	25	30	50	50	#8 – 1/0	Cu	UL
	125	7.5	20	20	30	30	75	100	#8 – 1/0	Cu	UL
	200	—	—	—	60	75	150	200	#6 – 300 kcmil	Cu	UL
	400	—	—	—	100	125	250	350	#2 – 600 kcmil	Cu	UL
	600	—	—	—	150	200	400	500	(2) #2 – 600 kcmil	Cu	UL
	800	—	—	—	200	250	500	600	(2) #2 – 600 kcmil	Cu/Al	UL
	1200	—	—	—	—	—	—	—	(4) #2 – 600 kcmil	Cu/Al	UL
	1600	—	—	—	—	—	—	—	(4) #2 – 600 kcmil	Cu/Al	UL
	2000	—	—	—	—	—	—	—	(8) #2 – 600 kcmil	Cu/Al	UL
	3150 ①	—	—	—	—	—	—	—	(8) #2 – 600 kcmil	Cu/Al	IEC

Handle ratings

Catalog number suffix	Style type	NEMA	Color	Marking	Defeatable	Padlockable	Catalog number
S	Selector	1,3R,12	Black	O/I & OFF/ON	Yes	Yes	OHBS2AJ
S1	Selector	1,3R,12	Red/Yel	O/I & OFF/ON	Yes	Yes	OHYS2AJ
P	Pistol	1,3R,12	Black	O/I & OFF/ON	Yes	Yes	OHBS65J6
P	Pistol	1,3R,4,4X,12	Black	O/I & OFF/ON	Yes	Yes	OHBS65L6
P1	Pistol	1,3R,12	Red/Yel	O/I & OFF/ON	Yes	Yes	OHYS65J6
P1	Pistol	1,3R,4,4X,12	Red/Yel	O/I & OFF/ON	Yes	Yes	OHYS65L6
BJ	Selector	1,3R,12	Black	O/I & OFF/ON	Yes	Yes	OHBS2AJ
YJ	Selector	1,3R,12	Red/Yel	O/I & OFF/ON	Yes	Yes	OHYS2AJ
B4	Pistol	1,3R,12	Black	O/I & OFF/ON	Yes	Yes	OHB145J12
B4	Pistol	1,3R,12	Black	I/O/II	Yes	Yes	OHB145J12E011
B4	Pistol	1,3R,4,4X,12	Black	I/O/II	Yes	Yes	OHB145L12E011
Y4	Pistol	1,3R,12	Red/Yel	O/I & OFF/ON	Yes	Yes	OHY145J12
B6	Pistol	1,3R,4,4X,12	Black	O/I & OFF/ON	Yes	Yes	OHBS65J6
Y6	Pistol	1,3R,4,4X,12	Red/Yel	O/I & OFF/ON	Yes	Yes	OHYS65L6
B7	Pistol	1,3R,4,4X,12	Black	O/I & OFF/ON	Yes	Yes	OHB175J12
B7	Pistol	1,3R,12	Black	I/O/II	Yes	Yes	OHB175J12E011
B7	Pistol	1,3R,4,4X,12	Black	I/O/II	Yes	Yes	OHB175L12E011
Y7	Pistol	1,3R,4,4X,12	Red/Yel	O/I & OFF/ON	Yes	Yes	OHY175L12
B8	Pistol	1,3R,4,4X,12	Black	O/I & OFF/ON	Yes	Yes	OHB80L6
B8	Pistol	1,3R,12	Black	I/O/II	Yes	Yes	OHB80J6E011
B8	Pistol	1,3R,4,4X,12	Black	I/O/II	Yes	Yes	OHB80L6E011
Y8	Pistol	1,3R,4,4X,12	Red/Yel	O/I & OFF/ON	Yes	Yes	OHY80L6
6	Pistol	1,3R,4,4X,12	Black	I/O/II	No	Yes	OHB174L12E011
8	Pistol	1,3R,4,4X,12	Metal	O/I & OFF/ON	No	Yes	YASDA-8
21	Pistol	1,3R,4,4X,12	Metal	I/O/II	No	Yes	YASDA-21
21	Pistol	1,3R,4,4X,12	Black	I/O/II	No	Yes	OHB274L12E011

① IEC rated only.
② Switches are for double throw.

General information
Fusible, 30A – 1200A

Switch ratings

UL general purpose amp rating	Maximum horsepower rating								Wire size for terminal lugs	For wire type	Approval ①
	Single phase			Three phase							
	120V	200V	240V	200V	208V	240V	480V	600V			
30	2	3	5	5	7.5	7.5	15	20	#18 – 8	Cu	CSA, UL
60	3	7.5	10	15	15	15	30	50	#14 – 4	Cu	CSA, UL
100	5	10	15	25	25	30	60	75	#14 – 2/0	Cu/Al	CSA, UL
200	—	—	—	50	50	60	125	150	#6 – 300 kcmil	Cu/Al	CSA, UL
400	—	—	—	100	125	125	250	350	#2 – 600 kcmil	Cu/Al	CSA, UL
600	—	—	—	150	150	200	400	500	(2) #2 – 600 kcmil	Cu/Al	CSA, UL
800	—	—	—	200	200	250	500	600	(2) #2 – 600 kcmil	Cu/Al	CSA, UL
1200	—	—	—	—	—	—	—	—	(4) #2 – 600 kcmil	Cu/Al	CSA, UL

UL 98

Enclosed non-fused, 3 poles, 16 to 100 A

EOT 16 U 3 M 1 - 1 P

Size and Amps
16 = 16A
30 = 30A
32 = 40A
45 = 60A
60 = 60A
63 = 80
100 = 100A

Poles
3

Enclosure
P = Plastic
S = Stainless steel
M = Sheet steel

Type
1 = Type 1
3 = Type 3R/12
4 = Type 4/4X

Auxiliary contact
[Blank] – None
0 = 1 N.C.
1 = 1 N.O.

Handle
P = Pistol Black
S = Selector Black
M = Metal (OHM...)

Enclosed non-fusible, 200 - 1200 A and specialty configurations

NF 200 1 - 6 P B6 C

Style
EOT - Non-fused (16-100A)
NF - Non-fused (200-1200A)
FJ - Fused "J" type fuses (30-800A)
FC -Fused "CC" type fuses (30-800A)

Amps
200
400
600
800
1200
1600
2000

Type
1 = Type 1
3 = Type 3R/12
4 = Type 4
X = Type 4X

Poles
3
6

Configuration
P = Standard
T = Double Throw

Handle
B = Black ①
Y = Red/Yellow ①

Revision

Custom versions or other versions of enclosed products are available upon request... please consult factory.

① Fusible switches are UL listed to the UL98 standard.

3 pole
Non-fusible, 16A – 3150A

NF32X-3PB6C

EOT16U3P3-S

EOT63U3M1-P

3 pole, 600V, 16-80A
Selector handle

UL general purpose amp rating	UL/NEMA Enclosure Type			
	1	3R/12	4/4X	3R/12 Plastic
	Catalog number	Catalog number	Catalog number	Catalog number
16	EOT16U3M1-S	EOT16U3M3-S	Not available with selector handles	EOT16U3P3-S
40	EOT32U3M1-S	EOT32U3M3-S		EOT32U3P3-S
60	EOT45U3M1-S	EOT45U3M3-S		EOT45U3P3-S
80	EOT63U3M1-S	EOT63U3M3-S		EOT63U3P3-P

3 pole, 600V, 16-100A
Pistol handle

UL general purpose amp rating	UL/NEMA Enclosure Type					
	1	3R/12	4	4X Stainless	4X Plastic	7 & 9
	Catalog number	Catalog number	Catalog number	Catalog number	Catalog number	Catalog number
16	EOT16U3M1-P	EOT16U3M3-P	-	EOT16U3S4-P	EOT16U3P4-P	NF167-3P
40	EOT32U3M1-P	EOT32U3M3-P	-	EOT32U3S4-P	EOT32U3P4-P	NF327-3P
60	EOT45U3M1-P	EOT45U3M3-P	-	EOT45U3S4-P	EOT45U3P4-P	NF457-3P
80	EOT63U3M1-P	EOT63U3M3-P	-	EOT63U3S4-P	EOT63U3P4-P	NF637-3P
30	EOT30U3M1-P	EOT30U3M3-P	-	EOT30U3S4-P	NF30P-3PB6C	NF307-3P
60	EOT60U3M1-P	EOT60U3M3-P	-	EOT60U3S4-P	NF60P-3PB6C	NF607-3P
100	EOT100U3M1-P	EOT100U3M3-P	-	EOT100U3S4-P	NF100P-3PB8C	NF1007-3P

3 Pole, 600V, 200A – 3150A
Pistol handle

UL general purpose amp rating	UL/NEMA Enclosure Type					
	1	3R/12	4	4X Stainless	4X Plastic	7 & 9
	Catalog number	Catalog number	Catalog number	Catalog number	Catalog number	Catalog number
200	NF2001-3PB8B	NF2003-3PB8B	NF2004-3PB8B	NF200X-3PB8B	NF200P-3PB8B	—
400	NF4001-3PB4B	NF4003-3PB4B	NF4004-3PB4B	NF400X-3PB4B	NF400P-3PB4B	—
600	NF6001-3PB7B	NF6003-3PB7B	NF6004-3PB7B	NF600X-3PB7B	NF600P-3PB7B	—
800	NF8001-3PB4A	NF8003-3PB4A	NF8004-3PB4A	NF800X-3PB4A	NF800P-3PB4A	—
1200	NF12001-3PB4A	NF12003-3PB4A	NF12004-3PB4A	NF1200X-3PB4A	NF1200P-3PB4A	—
1600	NF16001-3P8A	NF16003-3P8A	NF16004-3P8A	NF1600X-3P8A	—	—
2000	NF20001-3P8A	NF20003-3P8A	NF20004-3P8A	NF2000X-3P8A	—	—
3150 ①	NF31501-3P8A	NF31503-3P8A	NF31504-3P8A	NF3150X-3P8A	—	—

NOTE: All enclosed switches are provided with a black handle; however, most handles can be substituted with a red and yellow handle if desired.

EXAMPLE: A red/yellow selector handle for an EOT16U3M1-S can be substituted for the black selector handle by using the "S1" suffix instead of the "S" suffix, new catalog #EOT16U3M1-S1.

① IEC rated only.
② New Washdown.

6 pole
Non-fusible, 16A – 1200A

6 pole, 600V, 16-1200A
Pistol handle

UL general purpose amp rating	UL/NEMA Enclosure Type					
	1	3R/12	4	4X Stainless	4X Plastic	7
	Catalog number	Catalog number	Catalog number	Catalog number	Catalog number	Catalog number
16	NF161-6PB6C	NF163-6PB6C	NF164-6PB6A	NF16X-6PB6C	NF16P-6PB6A	NF167-6P
25	NF251-6PB6C	NF253-6PB6C	NF254-6PB6A	NF25X-6PB6C	NF25P-6PB6A	NF257-6P
40	NF321-6PB6C	NF323-6PB6C	NF324-6PB6A	NF32X-6PB6C	NF32P-6PB6A	NF327-6P
60	NF451-6PB6B	NF453-6PB6B	NF454-6PB6B	NF45X-6PB6B	NF45P-6PB6B	NF457-6P
80	NF631-6PB6A	NF633-6PB6A	NF634-6PB6A	NF63X-6PB6A	NF63P-6PB6A	NF637-6P
30	NF301-6PB6B	NF303-6PB6B	NF304-6PB6B	NF30X-6PB6B	NF30P-6PB6B	–
60	NF601-6PB6C	NF603-6PB6B	NF604-6PB6B	NF60X-6PB6B	NF60P-6PB6B	–
100	NF1001-6PB6B	NF1003-6PB6B	NF1004-6PB6B	NF100X-6PB6B	NF100P-6PB6B	–
125	NF1251-6PB2A	NF1253-6PB2A	NF1254-6PB4A	NF125X-6PB4A	NF125P-6PB4A	–
200	NF2001-6PB4B	NF2003-6PB4B	NF2004-6PB4B	NF200X-6PB4B	NF200P-6PB4B	–
400	NF4001-6PB8B	NF4003-6PB8B	NF4004-6PB8B	NF400X-6P8B	NF400P-6P8B	–
600	NF6001-6PB8B	NF6003-6PB8B	NF6004-6PB8B	NF600X-6P8B	NF600P-6P8B	–
800	NF8001-6PB8A	NF8003-6PB4A	NF8004-6PB4A	NF800X-6P8A	NF800P-6P8A	–
1200	NF12001-6P8A	NF12003-6PB4A	NF12004-6P8A	NF1200X-6P8A	NF1200P-6P8A	–

3 Pole double throw
3 pole, 600V, 16-1200A
Pistol handle

UL general purpose amp rating	UL/NEMA Enclosure Type				
	1	3R/12	4	4X Stainless	4X Plastic
	Catalog number	Catalog number	Catalog number	Catalog number	Catalog number
16	NF161-3TB8C	NF163-3TB8C	NF164-3TB8C	NF16X-3TB8C	NF16P-3TB8A
25	NF251-3TB8C	NF253-3TB8C	NF254-3TB8C	NF25X-3TB8C	NF25P-3TB8A
40	NF321-3TB8C	NF323-3TB8C	NF324-3TB8C	NF32X-3TB8C	NF32P-3TB8A
60	NF451-3TB8B	NF453-3TB8B	NF454-3TB8B	NF45X-3TB8B	NF45P-3TB8B
80	NF631-3TB8A	NF633-3TB8A	NF634-3TB8A	NF63X-3TB8A	NF63P-3TB8A
30	NF301-3TB8B	NF303-3TB8B	NF304-3TB8B	NF30X-3TB8B	NF30P-3TB8B
60	NF601-3TB8B	NF603-3TB8B	NF604-3TB8B	NF60X-3TB8B	NF60P-3TB8B
100	NF1001-3TB8B	NF1003-3TB8B	NF1004-3TB8B	NF100X-3TB8B	NF100P-3TB8B
125	NF1251-3TB8A	NF1253-3TB8A	NF1254-3TB8A	NF125X-3TB8A	NF125P-3TB8A
200	NF2001-3TB4B	NF2003-3TB4B	NF2004-3TB4B	NF200X-3TB4B	NF200P-3TB4B
400	NF4001-3TB4B	NF4003-3TB4B	NF4004-3TB4B	NF400X-3TB4B	NF400P-3TB4B
600	NF6001-3TB4A	NF6003-3TB4B	NF6004-3TB4A	NF600X-3TB4A	NF600P-3TB4A
800	NF8001-3TB4A	NF8003-3TB4A	NF8004-3TB4A	NF800X-3TB4A	NF800P-3TB4A
1200	NF12001-3TB4A	NF12003-3TB4A	NF12004-3TB4A	NF1200X-3TB4A	NF1200P-3TB4A

3 Pole
Fusible, 30A – 800A

FJ30X-3PB6B

3 pole, 600V, 30-800A
Pistol handle

UL general purpose amp rating	Fuse Type	UL/NEMA Enclosure Type				
		1	3R/12	4	4X Stainless	4X Plastic
		Catalog number	Catalog number	Catalog number	Catalog number	Catalog number
30	J	FJ301-3PB6B	FJ303-3PB6B	FJ304-3PB6B	FJ30X-3PB6B	FJ30P-3PB6B
30	CC	FC301-3PB6B	FC303-3PB6B	FC304-3PB6B	FC30X-3PB6B	FC30P-3PB6B
60	J	FJ601-3PB6B	FJ603-3PB6B	FJ604-3PB8B	FJ60X-3PB8B	FJ60P-3PB8B
100	J	FJ1001-3PB8B	FJ1003-3PB8B	FJ1004-3PB8B	FJ100X-3PB8B	FJ100P-3PB8B
200	J	FJ2001-3PB8C	FJ2003-3PB8C	FJ2004-3PB8C	FJ200X-3PB8C	FJ200P-3PB8C
400	J	FJ4001-3PB4C	FJ4003-3PB4C	FJ4004-3PB4C	FJ400X-3PB4C	FJ400P-3PB4C
600	J	FJ6001-3PB7C	FJ6003-3PB7C	FJ6004-3PB7C	FJ600X-3PB7C	FJ600P-3PB7C
800	L	FL8001-3PB4B	FL8003-3PB4B	FL8004-3PB4B	FL800X-3PB4B	FL800P-3PB4

Accessories
Fusible

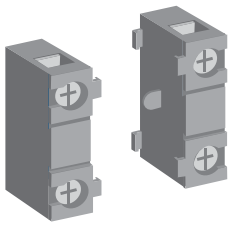

OA4B1C

Auxiliary contacts

For use on:	Contact configuration	Catalog number
30A	1 N.O. + 1 N. C.	OA4B1C
	2 N.O. + 2 N.C.	
60-1200	1 N.O.	OA1G10
	1 N.C.	OA3G01

Accessories

For use on:	Description	Installation suffix code
30A	Neutral block	N
60A – 100A	Neutral block	N
200A – 400A	Neutral block	N
600A – 800A	Neutral block	N
30A – 200A	Service entrance, 3 wire	U
	Service entrance, 4 wire	V
400A – 800A	Service entrance, 3 wire	U
	Service entrance, 4 wire	V

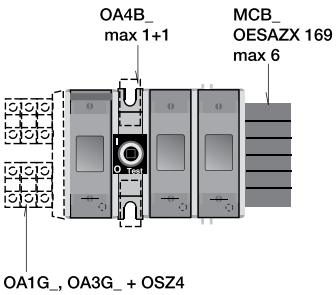

OA1G10

Accessories
Non -fusible

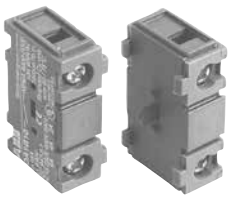

OA1G_

Auxiliary contacts

For use on:	Contact configuration	Catalog number
16A – 100A	1 N.O.	OA1G10
	1 N.C.	OA1G01
	1 N.O. & 1 N.C.	OA2G11
200A - 1200A	1 N.O.	OA1G10
	1 N.C.	OA3G01
1600A – 3150A	1 N.O. & 1 N.C.	OZXK-1
	2 N.O. & 2 N.C.	OZXK-2

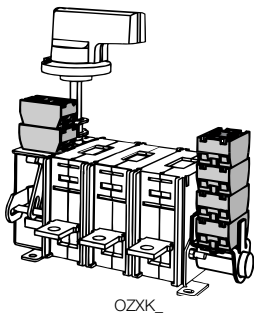

OZXK_

Accessories

For use on:	Description	Installation suffix code
EOT16, 32	Neutral or isolated ground block	N or G
EOT45, 63	Neutral or isolated ground block	N or G
OT30, 60, 100	Neutral or isolated ground block	N or G
NF200 – 1200A	Neutral block	N
NF1600 – 3150A	Neutral block	N
NF200 – 1200A	Service entrance, 3 wire	U
NF200 – 1200A	Service entrance, 4 wire	V

Selecting switches per NEC

Selecting switches per NEC

Article 430 of the US National Electric Code includes two methods for properly sizing disconnect switches:

1. Single motor application

A properly sized disconnect switch for a single motor will:

a) have an ampere rating greater than or equal to 115 percent of the rated motor full load current; or,

b) have a HP rating greater than or equal to the rated motor HP (at applied voltage) if the disconnect switch under consideration is HP rated.

2. Combination load application

A properly sized disconnect switch for a combination load will be selected by adding all the simultaneous individual loads in the circuit under consideration.

Using motor nameplate information, load information, and tables from section 430 of the NEC, determine one equivalent full load current and one equivalent locked rotor current. The equivalent locked rotor current can be used with table 430-151 to determine an equivalent HP rating. Select a disconnect switch:

a) greater than or equal to 115 percent of the equivalent full load current; and,

b) greater than or equal to the equivalent HP rating.

Use of UL98 & UL508 Disconnects
According to *NEC ®* Article 430

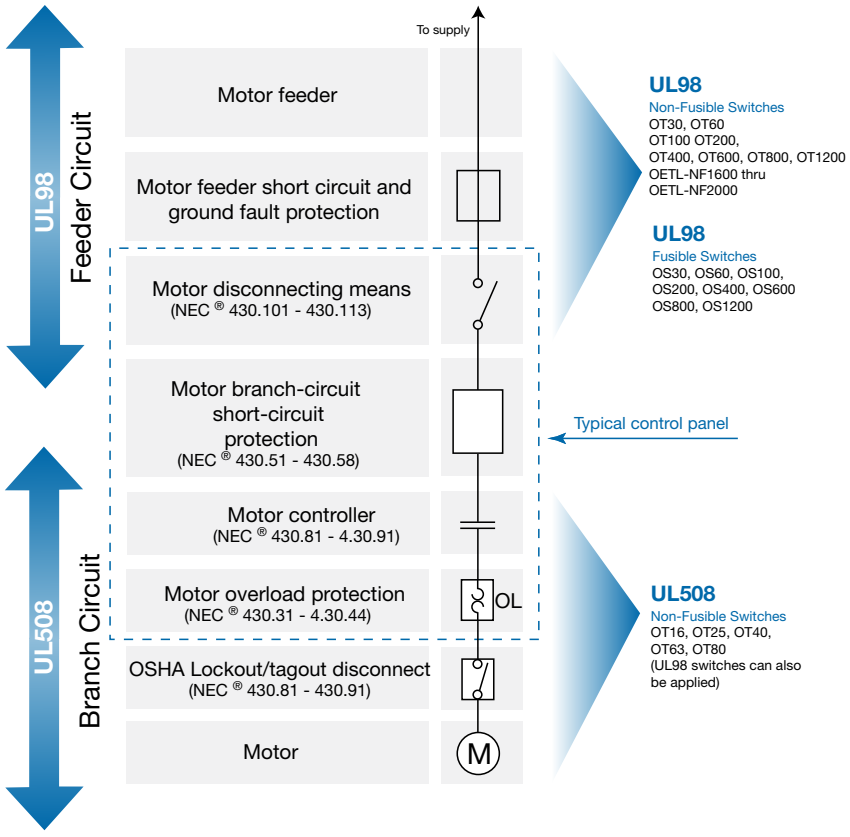

Technical data
OT16F3 – OT100F3
UL & CSA

UL & CSA

Catalog number	3 pole	OT16F3	OT25F3	OT40F3	OT63F3	OT80F3	OT30F3	OT60F3	OT100F3
Approvals①	2 pole 3 pole 4 pole	N/A UL508 & IEC UL508 & IEC	N/A UL508 & IEC UL508 & IEC	N/A UL508 & IEC UL508 & IEC	N/A UL508 & IEC UL508 & IEC	N/A UL508 & IEC UL508 & IEC	N/A UL98 & IEC UL98 & IEC	N/A UL98 & IEC UL98 & IEC	N/A UL98 & IEC UL98 & IEC
General purpose amp rating pf = 0.7 – 0.8	-40° to 40°C A	**20**	**30**	**40**	**60**	**80**	**30**	**60**	**100**
Max. operating voltage	V	600	600	600	600	600	600	600	600
Max. horsepower rating/motor FLA current, pf = 0.4 – 0.5									
Three phase									
240V	HP/A	5/15.2	7.5/22.0	10/28.0	15/42.0	20/54.0	10/28.0	20/54.0	30/80.0
480V	HP/A	10/14.0	15/21.0	20/27.0	30/40.0	40/52.0	20/27.0	40/52.0	50/65.0
600V	HP/A	10/11.0	20/22.0	25/27.0	30/32.0	40/41.0	30/32.0	40/41.0	50/52.0
Single phase 120V	HP/A	1/16	1.5/20	3/24	2/24.0	2/24.0	2/24.0	3/34.0	5/56.0
240V	HP/A	2/13.2	3/18.7	5/30.8	7.5/40.0	10/57.5	5/28.0	7.5/40.0	15/68.0
Short circuit rating with fuse									
Fuse type CC	kA	10 —	10 —-	10 —-	— —	— —	— —	— —	— —
Fuse type J	kA	10 10	10 10	10 10	100 —	100 —	200 —	200 —	200 —
Fuse type T	kA	10 10	10 10	10 10	100 —	100 —	200 —	200 —	200 —
Fuse type RK1	kA	10 —	10 —	10 —	— —	— —	— —	— —	— —
Fuse type RK5	kA	5 5	5 5	5 5	10 5	10 5	— —	— —	— —
Fuse type L	kA	— —	— —	— —	— —	— —	— —	— —	— —
Fuse type H	kA	— —	— —	— —	— 5	— 5	— —	— —	— —
Maximum fuse size	A	30 60 ④	30 60 ④	30 60 ④	100 150	100 150	60 —	150 —	150 —
3 cycle short circuit current withstand rating ⑤	kA	—	—	—	—	—	—	—	—
Endurances									
Min. Electrical endurance, pf = 0.75 – 0.80	operation cycles	6000	6000	6000	6000	6000	6000	6000	6000
Min. Electrical endurance, pf = 0.40 – 0.50	operation cycles	1000	1000	1000	1000	1000	②	②	②
Mechanical endurance	operations	20,000	20,000	20,000	20,000	20,000	20,000	20,000	20,000
Physical characteristics									
Weight, switches 3 pole	lb	0.24	0.24	0.24	0.59	0.59	0.79	0.79	0.79
4 pole	lb	0.33	0.33	0.33	0.77	0.77	1.10	1.10	1.10
Dimension, switches 3 pole H	in	2.68	2.68	2.68	3.60	3.60	3.94	3.94	3.94
W	in	1.38	1.38	1.38	2.07	2.07	2.76	2.76	2.76
D	in	2.20	2.20	2.20	2.85	2.85	2.95	2.95	2.95
Shaft set screw tightening torque	lb. in.	8.9	8.9	8.9	8.9	8.9	8.9	8.9	8.9
Shaft size — square ☐	in	.24 x .24	.24 x .24	.24 x .24	.24 x .24	.24 x .24	.24 x .24	.24 x .24	.24 x .24
	mm	6 x 6	6 x 6	6 x 6	6 x 6	6 x 6	6 x 6	6 x 6	6 x 6
Switch operating torque for rotary 3 pole switches	lb. in.	8.8	8.8	8.8	10.5	10.5	17.5	17.5	17.5
Terminal lug kits		Not required	Not required	Not required	Not required	Not required	Not required	Not required	Not required
Wire range	AWG	#18 – 8	#18 – 8	#18 – 8	#14 – 4	#14 – 4	#14 – 4	#14 – 4	#8 – 1/0
Torque:									
Wire tightening	lb. in.	7	7	7	18	18	55	55	55
Lug mounting	lb. in.	Integral	Integral	Integral	Integral	Integral	Integral	Integral	Integral
Auxiliary contacts		OA1G_ _	OA1G_ _	OA1G_ _	OA1G_ _	OA1G_ _	OA1G_ _	OA1G_ _	OA1G_ _
NEMA ratings, AC		A600	A600	A600	A600	A600	A600	A600	A600
AC rated voltage	VAC	600	600	600	600	600	600	600	600
AC thermal rated current	A	10	10	10	10	10	10	10	10
AC maximum volt-ampere making	VA	7200	7200	7200	7200	7200	7200	7200	7200
AC maximum volt-ampere breaking	VA	720	720	720	720	720	720	720	720
NEMA ratings, DC		R300	R300	R300	R300	R300	R300	R300	R300
DC rated voltage	VDC	300	300	300	300	300	300	300	300
DC thermal rated current	A	1	1	1	1	1	1	1	1
DC maximum make-break	VA	28	28	28	28	28	28	28	28
Torque: Wire tightening	lb. in	7	7	7	7	7	7	7	7
Wire range	AWG	#18 – 14	#18 – 14	#18 – 14	#18 – 14	#18 – 14	#18 – 14	#18 – 14	#18 – 14

① UL Listed switches are also CSA Approved.
② UL98 overload test, 50 operations, pf 0.40 – 0.50 at 2x FLA.
③ Multi-tap lug available, please see page 19.34.
④ Fuse size 70A for RK5
⑤ When protected by any Listed fuse or Listed circuit breaker whose current rating does not exceed the maximum thermal current rating of the switch.

Technical data
OT200U03 – OETL-NF3150
UL & CSA

UL & CSA

Catalog number	3 pole	OT200U03	OT400U03	OT600U03	OT800U03	OT1200U03	OETL-NF1600	OETL-NF2000	OETL-NF3150 ⑤
Approvals①	2 pole 3 pole 4 pole	UL98 & IEC UL98 & IEC UL98 & IEC	UL98 & IEC UL98 & IEC UL98 & IEC	UL98 & IEC UL98 & IEC UL98 & IEC	UL98 & IEC UL98 & IEC IEC	UL98 & IEC UL98 & IEC IEC	UL98 & IEC UL98 & IEC IEC	UL98 & IEC UL98 & IEC IEC	IEC IEC IEC
General purpose amp rating -40° to 40°C pf = 0.7 – 0.8	**A**	**200**	**400**	**600**	**800**	**1200**	**1600**	**2000**	**3150**
Max. operating voltage	V	600	600	600	600	600	600	480	–
Max. horsepower rating/Max. motor FLA current,									
pf = 0.4 – 0.5									
Three phase									
240V	HP/A	75/192.0	125/312.0	200/480.0	200/602	–	–	–	–
480V	HP/A	150/180.0	250/302.0	450/515	500/590	–	–	–	–
600V	HP/A	200/192.0	350/336.0	500/472.0	500/472	–	–	–	–
Single phase 120V	HP/A	–	–	–	–	–	–	–	–
240V	HP/A	–	–	–	–	–	–	–	–
Short circuit rating with fuse									
Fuse type CC	kA	–	–	–	–	–	–	–	–
Fuse type J	kA	200	100	–/100	–	–	–	–	–
Fuse type T	kA	–	–	100/–	–	–	–	–	–
Fuse type RK1	kA	–	–	–	–	–	–	–	–
Fuse type RK5	kA	–	–	100	–	–	–	–	–
Fuse type L	kA	–	–	–/100	100	100	100	100	–
Fuse type H	kA	–	–	–/100	–	–	–	–	–
Maximum fuse size	A	200	600	600/800	1200	1200	2000	2000	–
3 cycle short circuit current withstand rating ⑥	kA	14	30	50	50	50	65	65	–
Endurances									
Min. Electrical endurance, pf = 0.75 – 0.80	operation cycles	6000	1000	1000	500	500	500	500	400
Min. Electrical endurance, pf = 0.40 – 0.50	operation cycles	②	②	②	②	②	②	②	②
Mechanical endurance	operations 20,000	20,000	10,000	6,000	6,000	6000	6000	6000	
Physical characteristics									
Weight, switches 3 pole	lb	2.9	5.7	11.4	33.5	33.5	127.7	127.7	127.7
4 pole	lb	3.5	6.8	14.3	42.9	42.9	149.7	149.7	149.7
Dimension, switches 3 pole H	in	6.69	8.66	9.84	14.65	14.65	21.5	21.5	21.5
W	in	6.67	8.70	10.48	13.78	13.78	18.11	18.11	18.11
D	in	3.27	4.15	5.47	5.20	5.20	10.67	10.67	10.67
Shaft set screw tightening torque	lb. in.	14 - 17.7	–	–	–	–	–	–	–
Shaft size — square □in	.24 x .24	.47 x .47	.47 x .47	.47 x .47	.47 x .47	.47 x .47	.47 x .47	.47 x .47	
	mm	6 x 6	12 x 12	12 x 12	12 x 12	12 x 12	12 x 12	12 x 12	12 x 12
Switch operating torque for rotary 3 pole switches	lb. in.	62	142	184	575	575	438	438	438
Terminal lug kits		OZXA-200	OZXA-400	OZXA-800	OZXA-1200	OZXA-1200	OZXA-28	OZXA-28/2	OZXA-28/2
Wire range	AWG	#4-300kcmil③	#2-600kcmil③	(2)#2-600kcmil③	(4)#2-600kcmil③	(4)#2-600kcmil	(4)#2-600kcmil	(8)#2-600kcmil	(8)#2-600kcmil
Torque:									
Wire tightening	lb. in.	200	375	375	500	500	375	375	375
Lug mounting	lb. in.	72	240	240	450-670	450-670	230	230	230
Auxiliary contacts		OA_G_	OA_G_	OA_G_	OA_G_	OA_G_	OZXK-_ _	OZXK-_ _	OZXK-_ _
NEMA ratings, AC		A600	A600	A600	A600	A600	A600	A600	A600
AC rated voltage	VAC	600	600	600	600	600	600	600	600
AC thermal rated current	A	10	10	10	10	10	10	10	10
AC maximum volt-ampere making	VA	7200	7200	7200	7200	7200	7200	7200	7200
AC maximum volt-ampere breaking	VA	720	720	720	720	720	720	720	720
NEMA ratings, DC		P600	P600	P600	P600	P600	P600	P600	P600
DC rated voltage	VDC	600	600	600	600	600	600	600	600
DC thermal rated current	A	5	5	5	5	5	5	5	5
DC maximum make-break	VA	138	138	138	138	138	138	138	138
Torque: Wire tightening	lb. in	7	7	7	7	7	7	7	7
Wire range	AWG	#22 – #14	#22 – #14	#22 – #14	#22 – #14	#22 – #14	#22 – #14	#22 – #14	#22 – #14

① UL Listed switches are also CSA Approved.
② UL98 overload test, 50 operations, pf 0.40 – 0.50 at 2x FLA.
③ Multi-tap lug available, please see page 19.34.
④ Fuse size 70A for RK5
⑤ IEC rated only.
⑥ When protected by any Listed fuse or Listed circuit breaker whose current rating does not exceed the maximum thermal current rating of the switch.

Technical data
OT16F3 – OT100F3
IEC

IEC

Catalog number		3 pole	OT16F3	OT25F3	OT40F3	OT63F3	OT80F3	OT30F3	OT60F3	OT100F3
Rated insulation and operation		40°C								
voltage, AC20 and DC20		V	750	750	750	750	750	750	750	750
Rated impulse withstand voltage		kV	8	8	8	8	8	8	8	8
Rated thermal current, I_{th}										
AC 20/DC 20	open ①	A	25	32	40	63	80	40	63	115
	40°C enclosed	A	25	32	40	63	80	40	63	115
	60°C enclosed	A	25	32	40	63	80	40	63	115
Rated operational currents										
AC 21A	≤500V	A	**16**	**25**	**40**	**63**	**80**	**30**	**60**	**100**
	≤690V	A	16	25	40	63	80	40	63	100
	≤1000V	A	–	–	–	–	–	–	–	–
AC 22A	≤500V	A	16	25	40	63	80	40	63	100
	≤690V	A	16	25	40	63	80	40	63	100
	≤1000V	A	–	–	–	–	–	–	–	–
AC 23A	≤415V	A	16	20	23	45	75	40	63	80
	≤500V	A	16	20	23	45	58	40	60	60
	≤690V	A	10	11	12	20	20	40	40	40
	≤1000V	A	–	–	–	–	–	–	–	–
Rated operational currents/poles in series										
DC21A	48V	A	16/1	25/1	32/1	45/1	63/1	40/1	63/1	100/1
	110V	A	16/2	25/2	32/2	45/2	63/2	40/2	63/2	100/2
	220V	A	16/3	25/3	32/3	45/4	63/4	40/4	63/4	100/4
	440V	A	16/4	25/6	32/6	③	③	③	③	③
	750V	A	16/8	25/8	32/8	③	③	③	③	③
DC22A	48V	A	16/1	25/1	32/1	45/1	63/1	40/1	63/1	100/1
	110V	A	16/2	25/2	32/2	45/2	63/2	40/2	63/2	100/2
	220V	A	16/3	25/3	32/4	45/4	63/4	40/4	63/4	63/4
	440V	A	16/6	25/8	③	③	③	③	③	③
	750V	A	16/8	25/8	③	③	③	③	③	③
DC23A	48V	A	16/1	25/1	32/1	45/1	63/1	40/1	63/1	100/1
	110V	A	16/2	25/2	32/2	45/2	63/2	40/2	63/2	100/2
	220V	A	16/4	25/4	32/4	45/4	63/4	40/4	63/4	63/4
	440V	A	10/4	③	③	③	③	③	③	③
	750V	A	16/8	③	③	③	③	③	③	③
Rated operational power										
AC23A	230V	kW	3	4	5.5	11	22	7.5	11	22
	400/415V	kW	7.5	9	11	22	37	15	18.5	37
	500V	kW	7.5	9	11	22	37	15	18.5	37
	690V	kW	7.5	9	11	15	18.5	15	15	37
Short-circuit current		kA	50	50	50	50	50	50	50	50
with back-up fuses of size		A	25	32	40	63	80	100	100	100

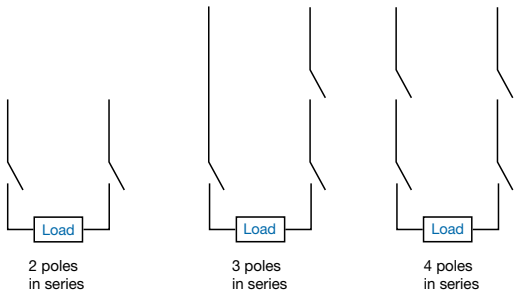

2 poles in series | 3 poles in series | 4 poles in series

① The ambient air temperature does not exceed +40°C and its average over a period of 24 hours does not exceed +35°C according to IEC 947.
② IEC 947-3, utilization category B, infrequent operation.
③ Not available at time of printing, please consult factory.

Technical data
OT200U03 – OETL-NF3150
IEC

IEC

Catalog number	3 pole		OT200U03	OT400U03	OT600U03	OT800U03	OT1200U03	OETL-NF1600	OETL-NF2000	OETL-NF3150
Rated insulation and operational	40°C									
voltage, AC20 and DC20		V	1000	1000	1000	1000	1000	1000	1000	1000
Rated impulse withstand voltage		kV	12	12	12	8	8	8	8	8
Rated thermal current, I_{th}										
AC 20/DC 20	open①	A	250	400	800	1600	1600	2500	3150	
	40°C enclosed	A	250	400	800	1600	1600	2300	2300	2600
	60°C enclosed	A	—	—	—	—	—	1950	1950	2300
Rated operational currents										
AC 21A	≤500V	A	**250**	**400**	**800**	**1600**	**1600**	**2500**②	**2500**②	**3150**②
	≤690V	A	250	400	800	1600	1600	2500②	2500②	3150②
	≤1000V	A	—	—	800	1600	1600	—	—	—
AC 22A	≤500V	A	250	400	800	1600	1600	1600②	1600②	1600②
	≤690V	A	250	400	800	1600	1600	—	—	—
	≤1000V	A	—	—	800	—	—	—	—	—
AC 23A	≤415V	A	250	400	800	1250	1250	800②	800②	800②
	≤500V	A	250	400	800	1250	1250	800②	800②	800②
	≤690V	A	250	400	800	1250	1250	—	—	—
	≤1000V	A	—	—	800	—	—	—	—	—
Rated operational currents/poles in series										
DC21A	48V	A	250/1	630/2	800/2	—	—	2500/2	2500/2	3150/2
	110V	A	250/2	630/2	800/2	—	—	2500/2	2500/2	3150/2
	220V	A	250/2	630/2	800/2	—	—	2500/2	2500/2	3150/2
	440V	A	250/3	630/3	800/3	—	—	2500/3	2500/3	3150/2
	750V	A	250/4	—	—	—	—	—	—	—
DC22A	48V	A	250/1	630/2	800/2	—	—	2500/2	2500/2	3150/2
	110V	A	250/2	630/2	800/2	—	—	2500/2	2500/2	3150/2
	220V	A	250/2	630/2	800/2	—	—	2500/2	2500/2	3150/2
	440V	A	250/3	630/3	800/3	—	—	—	—	—
	750V	A	250/4	—	—	—	—	—	—	—
DC23A	48V	A	250/1	630/2	—	—	—	—	—	—
	110V	A	250/2	630/2	—	—	—	—	—	—
	220V	A	250/2	630/2	—	—	—	—	—	—
	440V	A	250/3	—	—	—	—	—	—	—
	750V	A	250/4	—	—	—	—	—	—	—
Rated operational power										
AC23A	230V	kW	75	110	—	—	—	250	250	250
	400/415V	kW	132/140	220/230	450	710	710	400	400	400
	500V	kW	170	280	560	900	900	450	450	450
	690V	kW	240	355	800	1200	1200	—	—	—
Short-circuit current		kA	100	100	100	50/50④	50/50④	50/63④	50/63④	50/63④
with back-up fuses of size		A	400	800	800	—	—	—	—	—

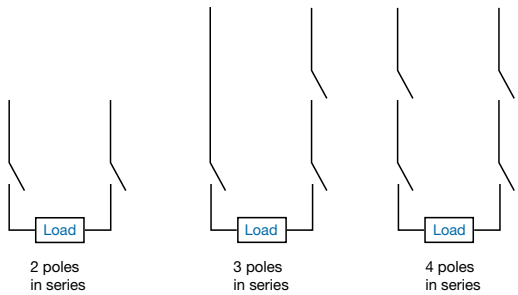

2 poles in series | 3 poles in series | 4 poles in series

① The ambient air temperature does not exceed +40°C and its average over a period of 24 hours does not exceed +35°C according to IEC 947.
② IEC 947-3, utilization category B, infrequent operation.
③ Not available at time of printing, please consult factory.
④ 690V / 500V

Technical data
OT16F3 – OT100F3
IEC

IEC

Catalog number		3 pole	OT16F3	OT25F3	OT40F3	OT63F3	OT80F3	OT30F3	OT60F3	OT100F3
Rated short-circuit making capacity, prospective peak value, I^{cm}		kA	0.7	0.7	0.7	1.4	1.4	3.6	3.6	3.6
Rated short time withstand current,										
RMS I^{cw}	0.2s	kA	–	–	–	–	–	–	–	–
RMS I^{cw}	1.0s	kA	0.5	0.5	0.5	1	1	2.5	2.5	2.5
AC breaking capacity										
pf = 0.35	≤415V	A	128	160	184	240	304	320	504	640
	≤500V	A	128	160	184	240	256	320	480	480
	≤690V	A	80	88	96	160	160	320	320	320
DC breaking capacity/poles in series										
L/R = 15ms										
	≤48V	A	64/1	100/1	128/1	180/1	252/1	160/1	252/1	400/1
	≤110V	A	64/2	100/2	128/2	180/2	252/2	160/2	252/2	400/2
	≤220V	A	64/3	100/4	128/4	180/4	180/4	160/4	252/4	252/4
	≤440V	A	①	①	①	①	①	①	①	①
	≤750V	A	①	①	①	①	①	①	①	①
Physical characteristics										
Electrical endurance at rated operational current, pf = 0.65		operation cycles	3000	3000	3000	3000	3000	3000	3000	3000
Mechanical endurance		operations	20,000	20,000	20,000	20,000	20,000	20,000	20,000	20,000
Weight	3 pole	kg	0.11	0.11	0.11	0.27	0.27	0.36	0.36	0.36
	4 pole	kg	0.15	0.15	0.15	0.35	0.35	0.5	0.5	0.5
Dimension 3 pole	H mm	68	68	68	91.5	91.5	100	100	100	
	W mm		35	35	35	52.5	52.5	70	70	70
	D mm		56	56	56	72.5	72.5	75	75	75
Power loss per pole		W	0.3	0.6	1	1.4	2.8	1	1.6	4
Shaft size — square □		mm	6 x 6	6 x 6	6 x 6	6 x 6	6 x 6	6 x 6	6 x 6	6 x 6
Switch operating torque for rotary 3 pole switches		Nm	1	1	1	1.2	1.2	2	2	2
Suitable conductor cross section Cu		mm2	0.75 – 10	0.75 – 10	0.75 – 10	1.5 – 25	1.5 – 25	1.5 – 25	1.5 – 25	10 – 70
Bolt size			–	–	–	–	–	–	–	–
Auxiliary contacts			OA1G_ _	OA1G_ _	OA1G_ _	OA1G_ _	OA1G_ _	OA1G_ _	OA1G_ _	OA1G_ _
Ratings according to IEC 947-5-1										
Rated voltage, U^i		VAC	690	690	690	690	690	690	690	690
Thermal current, I^{th}		A	16	16	16	16	16	16	16	16
AC12/DC12 I^e, A	U^e =120V	A	–	–	–	–	–	–	–	–
125V		A	–	–	–	–	–	–	–	–
240V		A	6 ②	6 ②	6 ②	6 ②	6 ②	6 ②	6 ②	6 ②
250V		A	–	–	–	–	–	–	–	–
400V		A	4 ②	4 ②	4 ②	4 ②	4 ②	4 ②	4 ②	4 ②
415V		A	–	–	–	–	–	–	–	–
440V		A	–	–	–	–	–	–	–	–
480V		A	–	–	–	–	–	–	–	–
500V		A	–	–	–	–	–	–	–	–
600V		A	–	–	–	–	–	–	–	–
690V		A	2 ②	2 ②	2 ②	2 ②	2 ②	2 ②	2 ②	2 ②

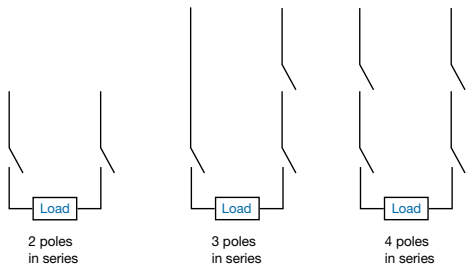

2 poles in series | 3 poles in series | 4 poles in series

① Not available at time of printing, please consult factory.
② AC15, according to IEC947-5-1.

Technical data
OT200U03 – OETL-NF3150
IEC

IEC

Catalog number		3 pole	OT200U03	OT400U03	OT600U03	OT800U03	OT1200U03	OETL-NF1600	OETL-NF2000	OETL-NF3150
Rated short-circuit making capacity, prospective peak value, I_{cm}500/690V		kA	30	65	80	110	110	140/105	140/105	140/105
Rated short time withstand current,										
RMS I_{cw}	0.25s, 690V	kA	15	28	36	50	50	–	–	–
RMS I_{cw}	1.0s, 690V	kA	8	15	20	50 ②	50 ②	80 ②	80 ②	80 ②
AC breaking capacity										
pf = 0.35	≤415V	A	2000	3200	5760	10,000	10,000	6400	6400	6400
	≤500V	A	2000	3200	5600	10,000	10,000	6400	6400	6400
	≤690V	A	2000	3200	5600	10,000 ③	10,000 ③	4800 ④	4800 ④	4800 ④
DC breaking capacity/poles in series										
L/R = 15ms, 3 pole in series										
	48V	A	1000/2	①	①	①	①	①	①	①
	110V	A	1000/2	①	①	①	①	①	①	①
	220V	A	1000/2	1600/2	2000/2	–	–	2600/2	2600/2	2600/2
	440V	A	1000/3	1600	2000/3	①	①	①	①	①
	750V	A	1000/4	①	①	①	①	①	①	①
Physical characteristics										
Electrical endurance at rated operational current, pf = 0.65		operation cycles	1000	1000	1000	500	500	100 ⑤	100 ⑤	100 ⑤
Mechanical endurance		operations	20,000	16,000	10,000	6000	6000	6000	6000	6000
Weight	3 pole	kg	1.2	2.2	5.2	15.2	15.2	37	37	37
	4 pole	kg	1.6	2.6	6.5	19.5	19.5	47	47	47
Dimension 3 pole	H mm	162	216	250	372	372	372	546	546	
	W mm	219	260	266	350	350	468	468	468	
	D mm	92.5	130	139	132	132	271	271	271	
Power loss per one pole		W	6.5	10	40	29	48	90	90	140
Shaft size — square □		mm	6 x 6	12 x 12	12 x 12	12 x 12	12 x 12	12 x 12	12 x 12	12 x 12
Switch operating torque for rotary 3 pole switches		Nm	7	16	21	21	21	50	50	50
Suitable conductor cross section Cu		mm^2	–	–	–	–	–	–	–	–
Bolt size			8 x 25	10 x 30	12 x 40	12 x 60	12 x 60	12 x 60	12 x 60	12 x 60
Auxiliary contacts			OA_G_	OA_G_	OA_G_	OA_G_	OA_G_	OZXK-_ _	OZXK-_ _	OZXK-_ _
Ratings according to IEC 947-5-1										
Rated voltage, U_i		VAC	690	690	690	690	690	690	690	690
Thermal rated current, I_{th}		A	16	16	10	10	10	10	10	10
AC12/DC12 I_e, A U_e =	120V	A	–	–	8/–	8/–	8/–	8/–	8/–	8/–
	125V	A	–	–	–/1.1	–/1.1	–/1.1	–/1.1	–/1.1	–/1.1
	240V	A	6/–	6/–	6/–	6/–	6/–	6/–	6/–	6/–
	250V	A	–	–	–/0.55	–/0.55	–/0.55	–/0.55	–/0.55	–/0.55
	400V	A	4/–	4/–	4/–	4/–	4/–	4/–	4/–	4/–
	415V	A	–	–	4/–	4/–	4/–	4/–	4/–	4/–
	440V	A	–	–	–/0.31	–/0.31	–/0.31	–/0.31	–/0.31	–/0.31
	480V	A	–	–	3/–	3/–	3/–	3/–	3/–	3/–
	500V	A	–	–	3/0.27	3/0.27	3/0.27	3/0.27	3/0.27	3/0.27
	600V	A	–	–	–/0.2	–/0.2	–/0.2	–/0.2	–/0.	2–/0.2
	690V	A	2/–	2/–	2/–	2/–	2/–	2/–	2/–	2/–

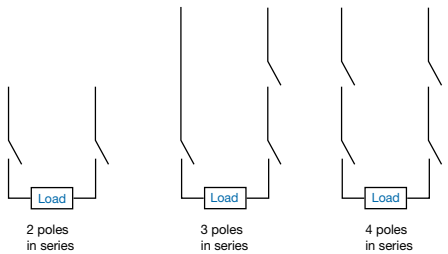

2 poles in series | 3 poles in series | 4 poles in series

① Not available at time of printing, please consult factory.
② Maximum distance between busbar support and switch terminal 70mm.
③ pf 0.95.
④ pf 0.65.
⑤ IEC 947-3, utilization category B, infrequent operation.

Technical data
OTDC Disconnect switches
100A - 200A, 1000VDC

Technical data in accordance to UL98B for disconnect switches OTDC100 and OTDC200
Suitable for use in photovoltaic systems in accordance with Article 690 of NEC

Catalog number		OTDC100	OTDC180	OTDC200
Approvals		UL98B & IEC	UL98B & IEC	UL98B & IEC
General purpose amp rating (-20° – +50° C)	A	100	180	200
Maximum operating voltage	V	1000	1000	1000
Short circuit current rating at 1000 VDC	kA	5	5	5
SCCR with:		Circuit breaker	Circuit breaker	Circuit breaker
Endurances	Oper	4000	4000	4000
Wiring range	MCM	#4-300	#4-300	#4-300

Technical data
OS30FA_12 – OS1200L03
UL & CSA

UL & CSA

Catalog number	3 pole	OS30FA_12	OS60GJ12	OS100GJ03	OS200J03	OS400J03	OS600J03	OS800L03	0S1200U03
Approvals ①	2 pole	N/A	N/A	IEC	UL98 & IEC	UL98 & IEC	UL98 & IEC	UL98 & IEC	UL98 & IEC
	3 pole	UL98 & IEC	UL98 & IEC	UL98 & IEC	UL98 & IEC	UL98 & IEC	UL98 & IEC	UL98 & IEC	UL98 & IEC
	4 pole	UL98 & IEC	UL98 & IEC	UL98 & IEC	UL98 & IEC	UL98 & IEC	UL98 & IEC	UL98 & IEC	UL98 & IEC
Technical ratings	-40° to 40°C								
General purpose amp rating pf = 0.7 – 0.8	A	30	60	100	200	400	600	800	1200
Max operating voltage	V	600	600	600	600	600	600	600	600
Max horsepower rating/ Max motor FLA current pf = 0.4 – 0.5 Three phase									
240V	HP/A	7.5/22.0	15/42.0	30/80.0	60/145.0	125/312.0	200/480.0	250/602.0	–
480V	HP/A	15/21.0	30/40.0	60/77.0	125/156.0	250/302.0	400/477.0	500/590.0	–
600V	HP/A	20/22.0	50/52.0	75/77.0	150/144.0	350/336.0	500/472.0	500/472.0	–
Single phase									
120V	HP/A	2/24.0	–	–	–	–	–	–	–
240V	HP/A	3/17.0	–	–	–	–	–	–	–
Short circuit rating with fuse	kA	200	200	200	200	200	200	200	200
UL Fuse size	A	30	60	100	200	400	600	800	1200
UL Fuse type		J/CC	J	J/T	J/T	J	J	L	L
Endurances									
Min. Electrical endurance, pf = 0.75 – 0.80	operation cycles	6000	6000	6000	6000	1000	1000	500	500
Mechanical endurance	operation	20,000	20,000	20,000	16,000	12,000	4,000	3000	2000
Physical characteristics									
Weight	3 pole lb	1.54	2.86	3.30	5.9	12.56	28.66	28.66	63.93
	4 pole lb	1.98	3.52	3.96	7.5	15.21	37.48	37.48	–
Dimension	3 pole H in	3.66	3.94	5.67	6.5	9.29	12.04	12.04	16.7
	W in	4.15	5.63	7.07	7.1	10.04	13.50	13.50	16.42
	D in	4.10	5.04	5.10	5.2	6.93	9.17	9.17	11.62
Shaft size square □	in	.24 x .24	.24 x .24	.24 x .24	.24 x .24	.47 x .47	.47 x .47	.47 x .47	.47 x .47
	mm	6 x 6	6 x 6	6 x 6	6 x 6	12 x 12	12 x 12	12 x 12	12 x 12
Switch operating torque for rotary 3 pole switches	lb. in.	26.6	35.5	70.9	195	195	336	336	575
Terminal lug kits		Integral	Integral	OZXA-24	OZXA-200	OZXA-400	OZXA-800	OZXA-800	OZXA-1200
Wire range	AWG	#18 – 8	#14 – 4	#14 – 2/0	#4 – 300kcmil	#2 – 600kcmil	(2) #2 – 600 kcmil	(2) #2 – 600 kcmil	(4)#2-600kcmil
Torque:									
Wire tightening	lb. in.	17	30	120	200	500	500	500	500
Lug mounting	lb. in.	N/A	N/A	50	72	480	480	480	480

Auxiliary contacts		OA4G_	OA1/3G_	OA_G_	OA_G_	OA_G_	OA_G_	OA_G_	OA_G_	OA_G_
NEMA ratings, AC		–	A600	A600	A600	A600	A600	A600	A600	A600
AC rated voltage	VAC	250	600	600	600	600	600	600	600	600
AC thermal rated current	A	6	10	10	10	10	10	10	10	10
AC maximum volt ampere making	VA	–	7200	7200	7200	7200	7200	7200	7200	7200
AC maximum volt ampere breaking	VA	–	720	720	720	720	720	720	720	720
NEMA ratings, DC		–	P300	R300	R300	R300	P600	P600	P600	P600
DC rated voltage	VDC	–	300	300	300	300	600	600	600	600
DC thermal rated current	A	–	1	1	1	1	1	1	1	1
DC maximum make break current	A	–	28	28	28	28	28	28	28	28
Torque:										
Wire tightening	lb. in.	7		7	7	7	7	7	7	7
Wire range	AWG	#22 – 14/#18 – 14		#18 – 14	#18 – 14	#18 – 14	#18 – 14	#20 – 12	#20 – 12	

19

① The following UL Listed switches are also CSA approved.

Technical data
OS30FA_12 – OS1200L03
IEC

IEC

Catalog number	3 pole	OS30FA_12	OS60GJ12	OS100GJ03	OS200J03	OS400J03	OS600J03	OS800L03	OS1200L03
Technical ratings	-40° to 40°C								
Rated insulation voltage Pollution degree 3 ⑥	V	1000	1000	1000	1000	1000	1000	1000	1000
Dielectric strength	50Hz/60Hz, 1 min kV	10	10	10	10	10	10	10	10
Rated impulse withstand voltage	kV	12	12	12	12	12	12	12	12
Rated thermal current, I_{th}/ max. fuse power dissipation ①									
AC 20/DC 20 open ②	A/W	32/3.5	63/7.5	160/12	200/17	400/45	630/60	800/65	1250/110
40°C enclosed	A/W	32/3.5	63/7.5	160/12	200/15	400/30	570/50	720/55	1000/85
Enclosed with solid links	A/W	32	–	–	–	–	–	–	–
with minimum cable cross section Cu	mm^2	6	16	70	95	240	2 x 185	2 x 240	1250/2 x 400
Rated operational voltage	AC 20 and DC 20V	1000	1000	1000	1000	1000	1000	1000	1000
AC Rated operational currents									
AC 21A ≤500V	A	32	63	160	200	400	630	800	1250 Cat. B
≤690V	A	32	63	160	200	400	630	800	1250 Cat. B
AC 22A ≤500V	A	32	63	160	200	400	630	800	1250 Cat. B
≤690V	A	32	63	160	200	400	630	800	1250 Cat. B
AC 23A ≤500V	A	32	63 ⑤	160 ⑤	200	400	630	800	1000 Cat. B
≤690V	A	32	63 ⑤	160 ⑤	200	400	630	800	1000 Cat. B
DC Rated operational currents/poles in series									
DC21A 48V	A	32/2 ③	63/2	160/2	200/1	400/2	630/1 CAT. B	800/1 CAT. B	–
110V	A	32/2	63/2	125/2	200/1	400/2	630/1 CAT. B	800/1 CAT. B	–
220V	A	32/2	63/2	125/2	200/1	400/2	630/1 CAT. B	800/1 CAT. B	–
440V	A	32/4	50/4	125/4	200/2	400/3 CAT. B	630/2 CAT. B	800/2 CAT. B	–
750V	A	—	④	④	180/4	400/4 CAT. B	630/4 CAT. B	720/4 CAT. B	–
880V	A	—	④	④	180/4	–	630/4 CAT. B	720/4 CAT. B	–
DC22A 48V	A	32/2 ③	63/2	160/2	200/1	400/2	—	800/1 CAT. B	–
110V	A	32/2	63/2	125/2	200/1	400/2	—	800/1 CAT. B	–
220V	A	32/2	63/2	125/2	200/1	400/2	—	800/1 CAT. B	–
440V	A	32/4	–	–	200/2	400/3 CAT. B	—	800/2 CAT. B	–
750V	A	—	④	④	180/4	400/4 CAT. B	—	800/4 CAT. B	–
880V	A	—	④	④	180/4	–	—	800/4 CAT. B	–
DC23A 48V	A	32/2 ③	63/2	160/2	200/1	400/2	—	800/1 CAT. B	–
110V	A	32/2	63/2	125/2	200/1	400/2	—	800/1 CAT. B	–
220V	A	32/2	63/2	125/2	200/1	400/2	—	800/1 CAT. B	–
440V	A	32/4	–	–	200/2	400/3 CAT B	—	800/2 CAT. B	–
750V	A	—	–	–	180/4	400/4 CAT. B	—	720/4 CAT. B	–
880V	A	—	–	–	180/4	—	—	720/4 CAT. B	–
Rated operational power	AC23A								
230V	kW	7.5	18.5	45	60	132	200	250	315
400V	kW	15	30	75	110	220	355	450	560
415V	kW	15	30	75	110	230	355	450	560
500V	kW	18.5	37	90	132	280	450	560	710
690V	kW	22	55	132	200	400	630	710	1000

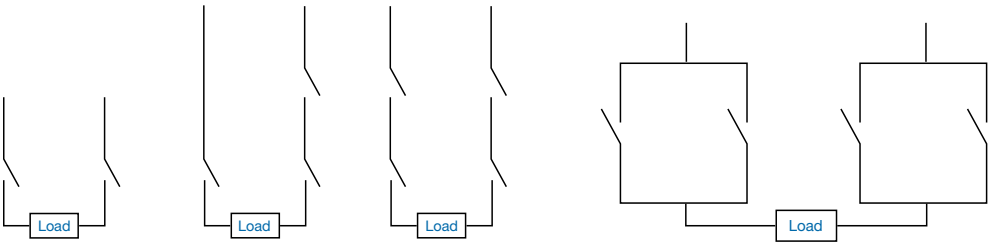

2 poles in series | 3 poles in series | 4 poles in series | 2 + 2 parallel contacts in series

① Ambient temperature 60°C: derating 20 percent. Mounting on ceiling: derating 10 percent. Mounting on wall, horizontal fuses: derating 8 percent.
② The ambient air temperature does not exceed +40°C and its average over a period of 24h does not exceed +35°C according to IEC 947.
③ For 30A switches, use 2 + 2 parallel contacts in series.
④ Available on request.
⑤ IEC 947-3, utilization category B, infrequent operation.
⑥ Pollution degree 3: Conductive pollution occurs, or dry, non-conductive pollution occurs, which becomes conductive due to condensation.

Technical data
OS30FA_12 – OS1200L03
IEC

IEC

Catalog number	3 pole		OS30FA_12	OS60GJ12	OS100GJ03	OS200J03	OS400J03	OS600J03	OS800L03	OS1200L03
Rated breaking capacity										
in category AC-23A	500V	A	256	504	1280	1600	3200	5760	5760	8000
	690V	A	256	504	1280	1600	3200	5760	5760	8000
Rated breaking capacity/poles in series										
in category DC-23	<220V	A	128/2	252/2	640/2	—	—	–	–	–
	440V	A	128/4	—	—	—	—	–	–	–
	500 – 750V	A	—	—	—	—	—	–	–	–
	1000V	A	—	—	—	—	—	–	–	–
Rated conditional short-circuit current r.m.s. ③										
	80 kA, 415V	kA	9	13.5	22	35	40	75	75	89
	100 kA, 500 V	kA	8	12.5	22	37.5	40	75	75	105
	50 kA, 690 V	kA	7	9.5	15	–	–	–	–	–
Rated short time withstand current, 1s.		kA	1	2.5	5	8	14	18	18	40
Rated capacitor power										
The capacitor rating of the fusible disconnect switch is limited by the fuse link										
	400 V	kVar	15	30	60	90	180	250	310	440
	415V	kVar	15	32	65	100	200	270	340	460
	690V	kVar	25	50	100	160	325	450	550	750
Power loss/pole										
with rated current, without fuse		W	2	4	9	8	30	46	75	75
Mechanical endurance		operations	20,000	20,000	20,000	20,000	16,000	10,000	10,000	6000
Physical characteristics										
Weight	3 pole	kg	0.7	1.1	1.5	2.6	5.7	11.5	11.5	29.00
	4 pole	kg	0.9	1.3	1.8	–	–	–	–	–
Dimension	3 pole	H mm	93	100	144	198.5	236	306	282	424.18
		W mm	106	143	179	181.5	255	343	376	417.07
		D mm	104	120	129	132	176	233	233	295.14
Shaft size square □		mm	6 x 6	6 x 6	6 x 6	6 x 6	12 x 12	12 x 12	12 x 12	12 x 12
Terminals										
Built-in terminal size	mm^2		0.5 – 10	2.5 – 25	—	—	—	—	—	—
Terminal bolt size, metric thread diameter x length	mm	—	—	—	M8 x 25	M8 x 25	M10 x 30	M12 x 40	M12 x 40	M12 x 40
Terminal bolt tightening torque		Nm	2	3.5	15-22	15 – 22	30 – 44	50 – 75	50 – 75	50 – 75
Fuse-links bolts tightening torque		Nm	2	3.5	M5:3.5 M8:5	4	20	M10:30 M12:40	M10:30 M12:40	M12:40
Operating torque		Nm	3	5	7	7	19	38	38	65
Auxiliary contacts			OA4G_ ①	OA1/3G ②	OA_G_ ②	OA_G_ ②	OA_G_ ②	OA_G_	OA_G_	OA_G_	OA_G
Ratings according to IEC 947-5-1										
Rated voltage, U_i		VAC	690	690	690	690	690	690	690	690	690
Thermal current, I_{th}		A	10	16	16	16	16	16	16	16	16
AC12 / DC12, I_e	U_e=24V	A	— / 6	—	—	—	—	—	—	—	—
	120V	A	— / 6	—	—	—	—	—	—	—	—
	125V	A	—	—	—	—	—	—	—	—	—
	230V	A	—	6 / —	6 / —	6 / —	6 / —	—	—	6 / —	6 / —
	250V	A	3 / 0.1	—	—	—	—	—	—	—	—
	400V	A	—	4 / —	4 / —	4 / —	4 / —	—	—	4 / —	4 / —
	415V	A	—	—	—	—	—	—	—	—	—
	440V	A	2 / —	—	—	—	—	—	—	—	—
	480V	A	—	—	—	—	—	—	—	—	—
	500V	A	—	—	—	—	—	—	—	—	—
	600V	A	—	—	—	—	—	—	—	—	—
	690V	A	—	2 / —	2 / —	2 / —	2 / —	2 / —	2 / —	2 / —	2 / —

① AC15 / DC12, according to IEC 947-5-1
② AC15, according to IEC 947-5-1
③ Values shown are corresponding max. allowed cut-off current, peak-values per single phase fuse tests.

Auxiliary contact timing diagrams
OT16 – OT100

Legend

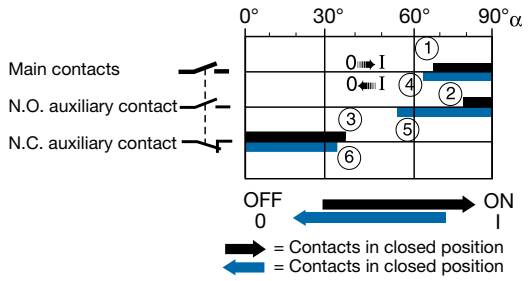

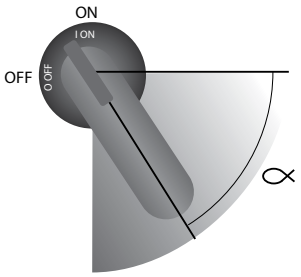

Contacts closing

① Main contacts close
② N.O. auxiliary contacts close
③ N.C. auxiliary contacts open

Contacts opening

④ Main contacts open
⑤ N.O. auxiliary contacts open
⑥ N.C. auxiliary contacts close

OT16, OT25, OT40

Catalog number	Auxiliary contact	Contact configuration
OT16, OT25, OT40	OA1G10 OA1G01 OA2G11	1 N.O. 1 N.C. 1 N.O. & 1 N.C.

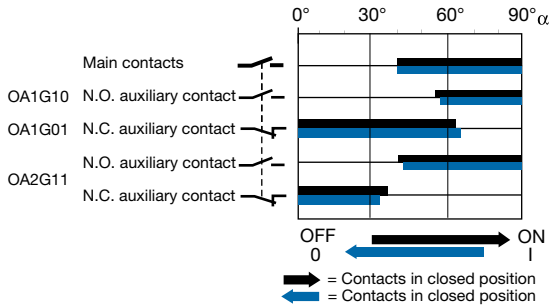

OT63, OT80

Catalog number	Auxiliary contact	Contact configuration
OT63, OT80	OA1G10 OA1G01 OA2G11	1 N.O. 1 N.C. 1 N.O. & 1 N.C.

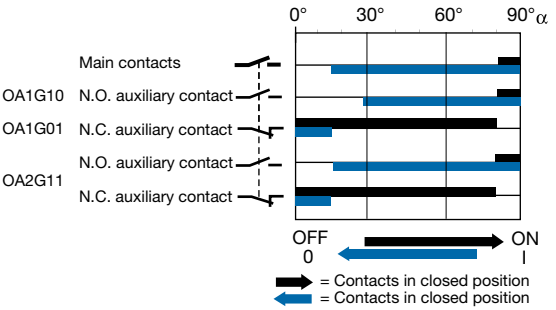

OT30, OT60, OT100

Catalog number	Auxiliary contact	Contact configuration
OT30, OT60, OT100	OA1G10 OA1G01 OA2G11	1 N.O. 1 N.C. 1 N.O. & 1 N.C.

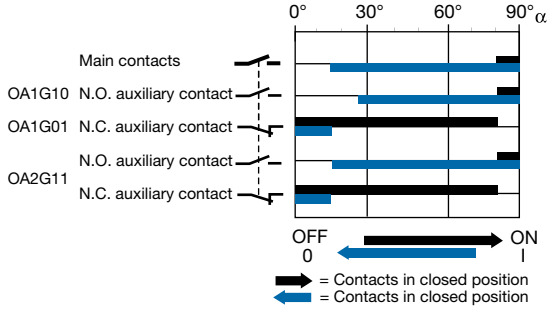

Auxiliary contact timing diagrams
OT200U – OETL-NF3150

OT200U03 – OT1200U03

Catalog number	Auxiliary contact	Contact configuration
OT200U03 – OT1200U03	OA1G10 OA3G01	1 N.O. 1 N.C.

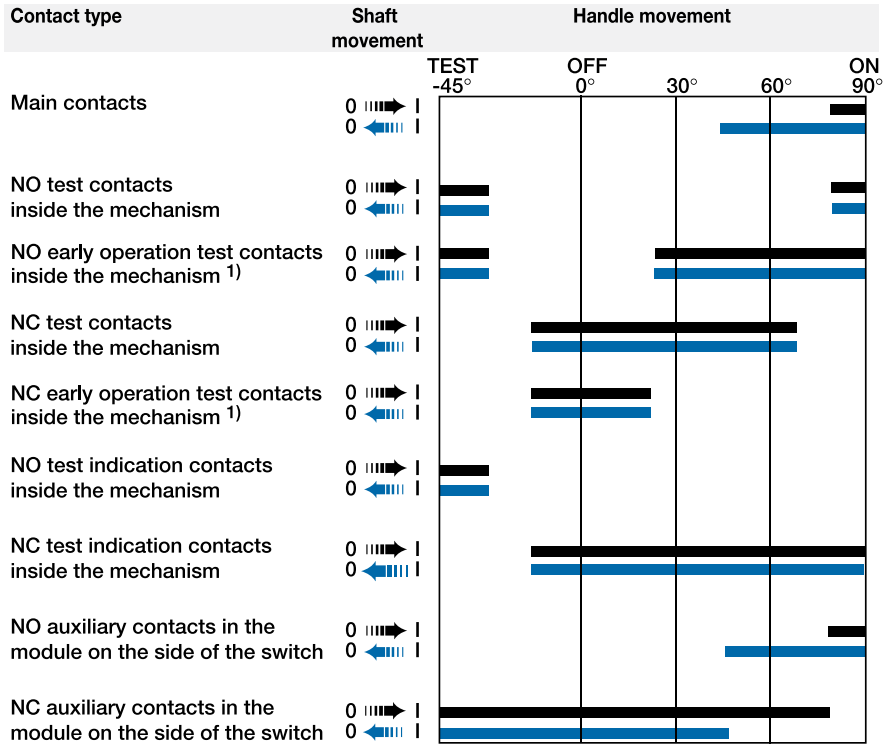

1) OT800 - 1200 only

OETL-NF1600 – OETL-NF3150

Catalog number	Auxiliary contact	Contact configuration
OETL-NF1600A – OETL-NF3150	OZXK-1 OZXK-2 OZXK-3	1 N.O. & 1 N.C. 2 N.O. & 2 N.C. 4 N.O. & 4 N.C.

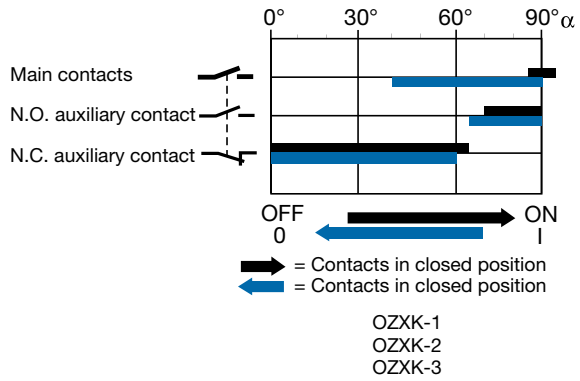

OZXK-1
OZXK-2
OZXK-3

Auxiliary contact timing diagrams
OS30_

Legend

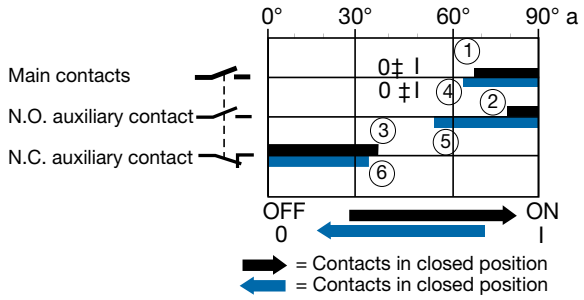

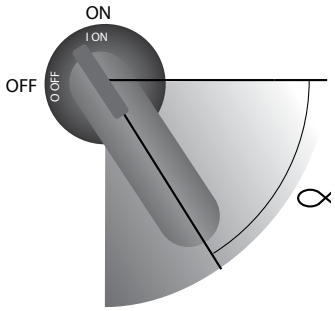

Contacts closing
① Main contacts close
② N.O. auxiliary contacts close
③ N.C. auxiliary contacts open

Contacts opening
④ Main contacts open
⑤ N.O. auxiliary contacts open
⑥ N.C. auxiliary contacts close

OS30_

Catalog number	Auxiliary contact	Contact configuration
OS30_	OA4B1C OA1G10 OA3G01	1 N.O. & 1 N.C. 1 N.O. 1 N.C.

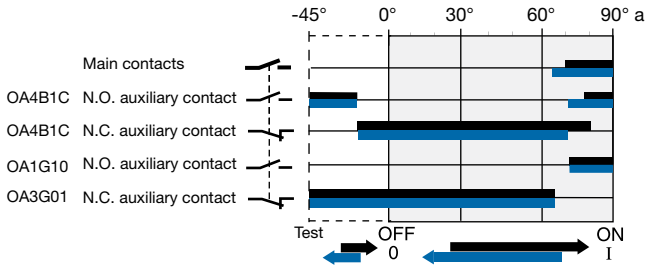

Auxiliary contact timing diagrams
OS60 - OS1200

OS60-OS1200

Contact type	Shaft movement	Handle movement
Main contacts	0 I 0 I	TEST -45° / OFF 0° / 30° / 60° / ON 90°
NO test contacts inside the mechanism	0 I 0 I	
NO early operation test contacts inside the mechanism 1)	0 I 0 I	
NC test contacts inside the mechanism	0 I 0 I	
NC early operation test contacts inside the mechanism 1)	0 I 0 I	
NO test indication contacts inside the mechanism	0 I 0 I	
NC test indication contacts inside the mechanism	0 I 0 I	
NO auxiliary contacts in the module on the side of the switch	0 I 0 I	
NC auxiliary contacts in the module on the side of the switch	0 I 0 I	

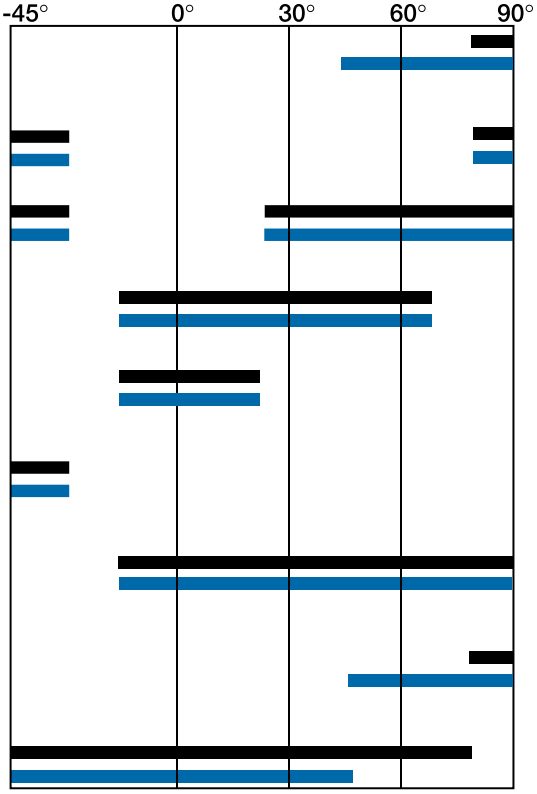

1) OS1200 only

NEMA Environmental ratings

Introduction

An enclosure is a surrounding case constructed to provide a degree of protection to personnel against accidental contact with the enclosed equipment and to provide a degree of protection to the enclosed equipment against specified environmental conditions.

A brief description of the more common types of enclosures used by the electrical industry relating to their environmental capabilities follows. Refer to NEMA Standards Publication for more information regarding applications, features and design tests.

Individual NEMA product Standards Publications or third party certification standards may contain additional requirements for product testing and performance.

Definitions pertaining to nonhazardous locations

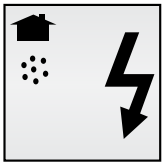

Type 1

Enclosures are intended for indoor use primarily to provide a degree of protection against limited amounts of falling dirt. (NEMA Standard 7-15-1991.)

Type 3R

Enclosures are intended for outdoor use primarily to provide a degree of protection against rain, sleet and damage from external ice formation. (NEMA Standard 7-15-1991.)

Type 4

Enclosures are intended for indoor or outdoor use primarily to provide a degree of protection against windblown dust and rain, splashing water, hose-directed water and damage from external ice formation. (NEMA Standard 1-10-1979.)

Type 4X

Enclosures are intended for indoor or outdoor use primarily to provide a degree of protection against corrosion, windblown dust and rain, splashing water, hose-directed water and damage from external ice formation. (NEMA Standard 1-10-1979)

Type 12

Enclosures are intended for indoor use primarily to provide a degree of protection against circulating dust, falling dirt, and dripping noncorrosive liquids. (NEMA Standard 7-15-1991.)

Type 13

Enclosures are intended for indoor use primarily to provide a degree of protection against dust, spraying of water, oil and noncorrosive coolant. (NEMA Standard 1-10-1979.)

Definitions pertaining to hazardous locations

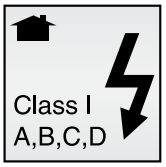

Type 7

Enclosures are intended for indoor use in locations classified as Class I, Groups, A, B, C, or D, as defined in the National Electrical Code. (NEMA Standard 7-15-1991.)

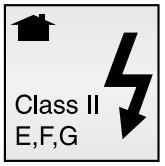

Type 9

Enclosures are intended for indoor use in locations classified as Class II, Groups E, F, or G, as defined in the National Electrical Code. (NEMA Standard 7-15-1991.)

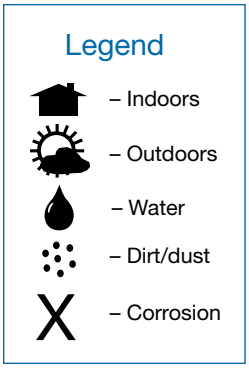

IEC Environmental ratings

IP ratings

indicate the degree of protection against dust, liquids and impacts. The IP degrees of protection are defined by the French standard NFC 20-010. To rate a device's degrees of protection, the letters IP are followed by up to three numbers. These numbers are defined as follows:

first number
protection against solid objects

IP 0 — no protection

1 — 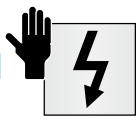 protected against solid objects over 50mm (e.g. accidental touch by hands.)

2 — protected against solid objects over 12 mm (e.g. fingers)

3 — 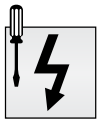 protected against solid objects over 2.5 mm (tools & wires)

4 — protected against solid objects over 1mm (small tools & small wires)

5 — protected against dust (no harmful deposit)

6 — totally protected against dust

second number
protection against liquids

IP 0 — no protection

1 — protected against vertically falling rain or condensation

2 — protected against direct sprays of water up to 15° from vertical

3 — 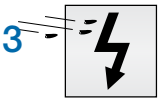 protected against sprays to 60° from vertical

4 — protected against water sprayed from all directions

5 — protected against low pressure jets of water from all directions

6 — 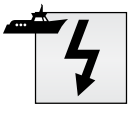 protected from strong jets of water (e.g. for use on ship decks)

7 — 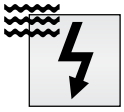 protected against the effects of immersion between 15cm and 1m

third number
protection against mechanical impacts

IP 0 — no protection

1 — 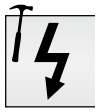 impact 0,225 joule 150g falling from 15 cm

2 — impact 0,375 joule 250g falling from15 cm

3 — impact 0,50 joule 250g falling from 20cm

5 — impact 2,00 joule 500g falling from 40 cm

7 — impact 6,00 joule 1.5kg falling from 40 cm

9 — 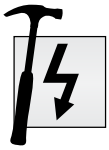 impact 20,00 joule 5 kg falling from 40 cm

Definitions

AC – Alternating current — Current that reverses its direction of flow twice per cycle.

Ambient temperature — Temperature of the air surrounding the unit.

Amp rating — The basic unit of measurement for electric current (columbs / seconds).

Conventional thermal current I_{th} — Value of the current the disconnect switch can withstand with poles in closed position, in free air for an eight hour duty, without the temperature rise of its various parts exceeding the limits specified by the standards.

Cycle duration — Total time of the on-load + off-load period.

DC – Direct current — Current that flows in only one direction.

Electrical endurance — Number of on-load operating cycles.

IEC environmental protection type — see page 19.48.

Full load amp current FLA — The current required by a motor to produce full-load torque at the motor's rated speed.

Inductive load — An electrical load characterized by having significant inrush (5 to 6 times FLA for typical design-B AC induction motors).

kW — Kilowatts (1000 watts)

Lockout/Tagout — Means of removing power from electrical equipment during inspection, service or repair.

Make / Break — ON / OFF

Mechanical endurance — Number of off-load operating cycles.

Poles in series — Means of connection poles using wires or bus bars to increase breaking capacity of load.

Power factor — The relationship between working power and total power consumed. Power factor measures how effectively electrical power is being used.

Rated insulation U_i — Voltage value which designates the unit and to which dielectric tests, clearance and creepage distances are referred.

Rated operating current I_e —Current value stated by the manufacturer and taking into account the rated operating voltage U_e, the rated frequency, the rated duty, the utilization category, the electrical contact life and the type of protective enclosure.

Rated operating voltage U_e — Voltage value to which utilization characteristics of the disconnect switch are referred, i.e. phase-to-phase voltage in 3 phase circuits.

Rated short circuit making capacity I_{cm}— The rated short-circuit making capacity of a disconnect switch, a disconnector or a switch-disconnector is the value assigned to equipment at the rated operational voltage, frequency (if any) and specified power-factor for AC or time constant for DC. It is expressed as the maximum prospective peak current under prescribed conditions.

Rated short time withstand current I_{cw} — The rated short-time withstand current of a disconnect switch, a disconnector or a switch-disconnector is the value that the equipment can carry without damage, under the test conditions specified in the relevant product standard. The value of the rated short-time withstand current shall be not less than twelve times the maximum rated operational current unless otherwise stated by manufacturer and the duration of the current shall be 1 s.

Resistive load — An electrical load characterized by not having any significant inrush current.

Short circuit protection coordination — Co-ordination types "1" and "2" are defined in IEC 947-4-1.
Type 1 coordination — There has to be no discharge of parts beyond the enclosure. Damage to the contactor and the overload is acceptable.
Type 2 coordination — No damage to the overload relay or other parts has occurred, except that welding of contactor or starter contacts is permitted, if they are easily separated.

Time constant — Ratio of inductance to the resistance: L/R = mH/Ohm = ms.

Torque — The force that produces rotation. It is commonly measured in pound-feet (lb-ft). Torque applies to such things as motor operations, handle rotations, wire tightening.

NEMA environmental protection type — see page 19.47.

Volt — The unit of electrical potential difference and electromotive force.

Approximate dimensions
OT16F3 – OT100F3
Base & DIN rail mounted switches

00.00 / 00.00 Inches [Millimeters]

OT16F3, OT25F3, OT40F3 — base & DIN rail mounted switch

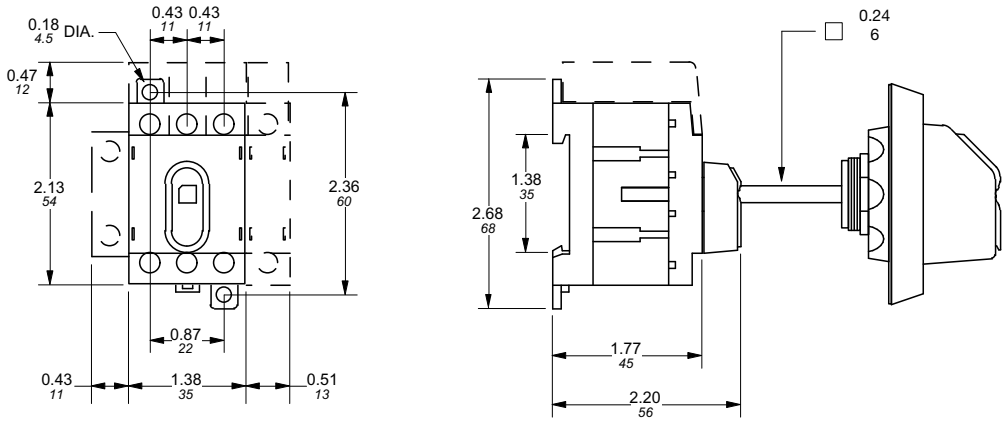

OT63F3, OT80F3 — base & DIN rail mounted switch

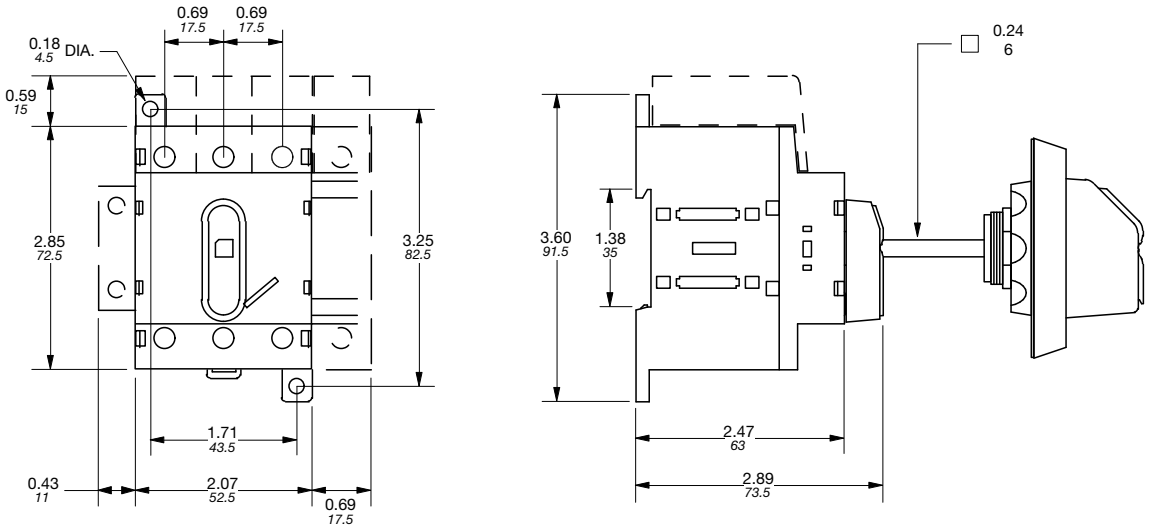

OT30F3, OT60F3, OT100F3 — base & DIN rail mounted switch

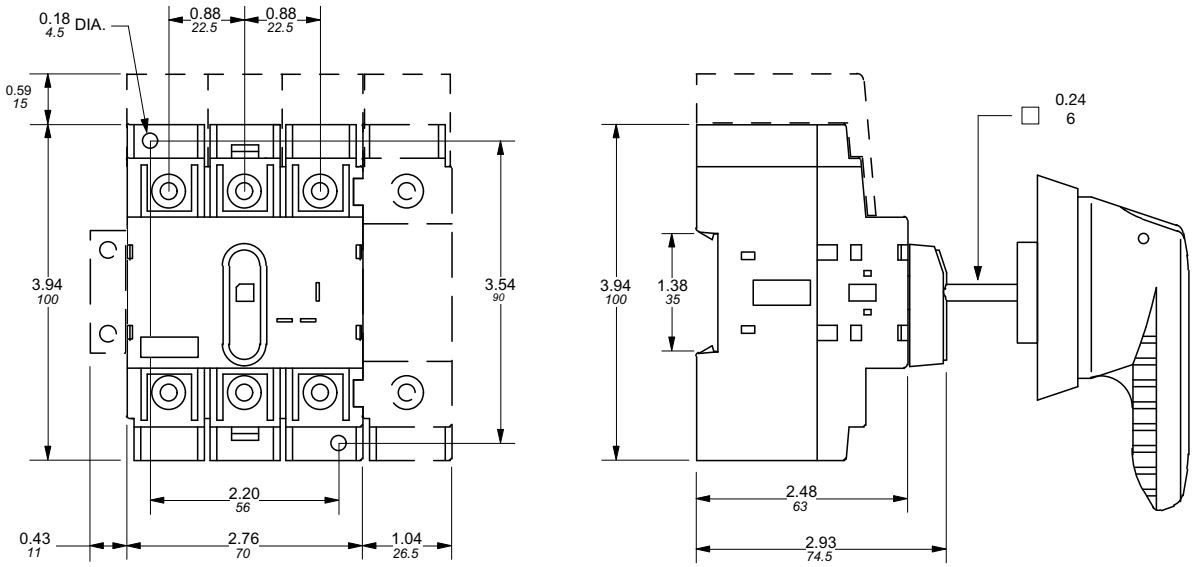

19

Approximate dimensions
OT16FT3 – OT100FT3
Door mounted switches

00.00 / 00.00 Inches [Millimeters]

OT16FT3, OT25FT3, OT40FT3 — door mounted switch

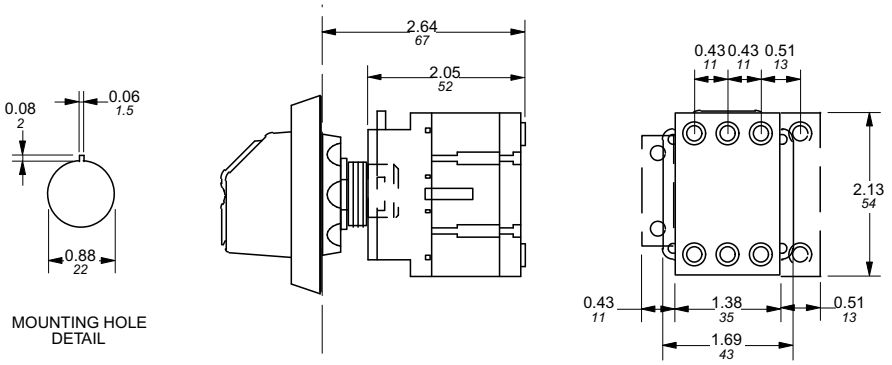

OT63FT3, OT80FT3 — door mounted switch

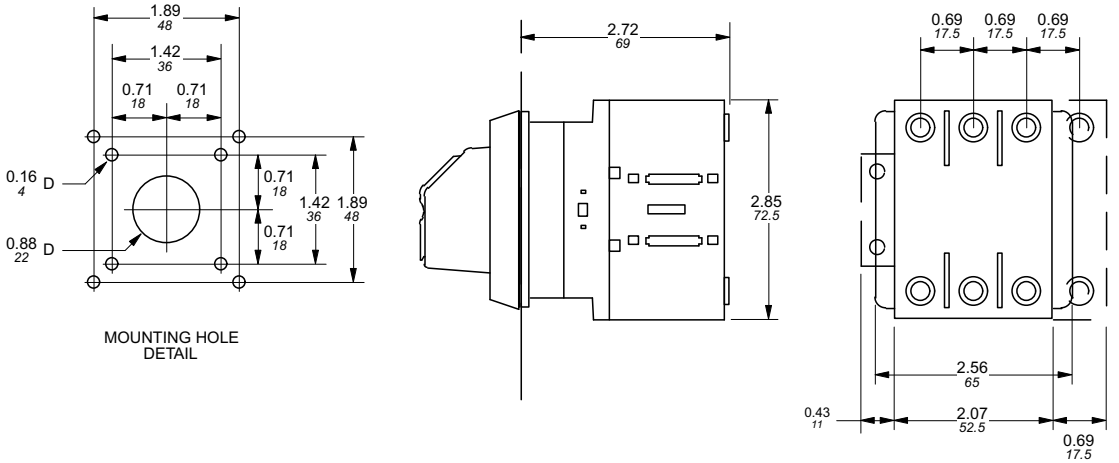

OT30FT3, OT60FT3, OT100FT3 — door mounted switch

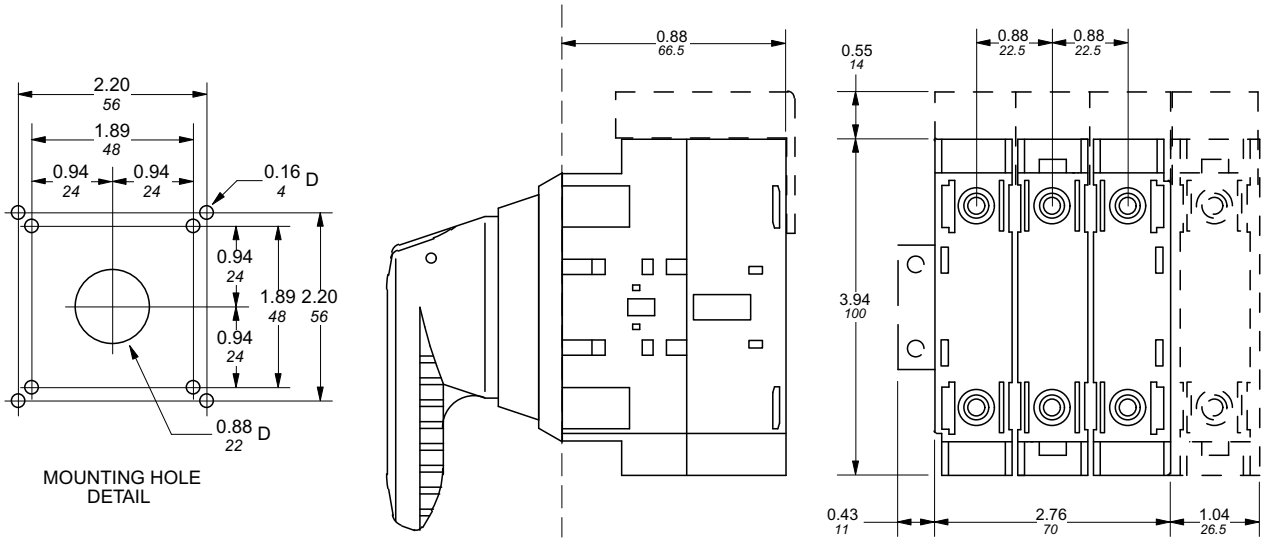

Approximate dimensions
OT16F6 – OT100F6
6-pole switches

00.00 Inches
00.00 [Millimeters]

OT16, 25, 40F6 — 6 Pole switches

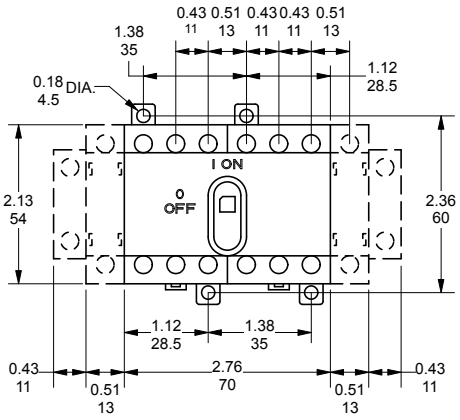

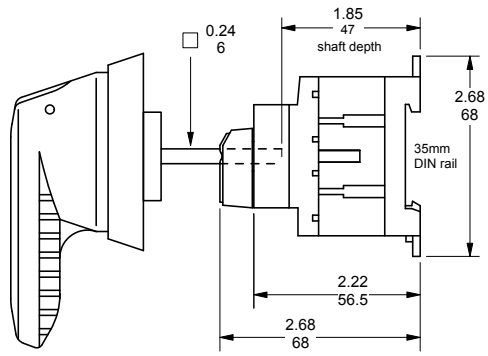

OT63, OT80F6 — 6 Pole switches

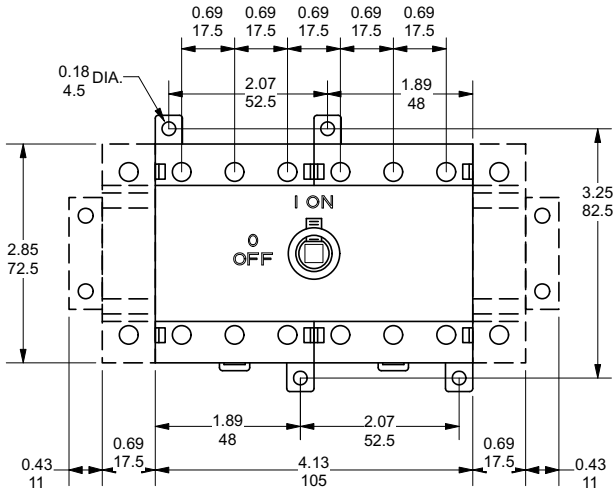

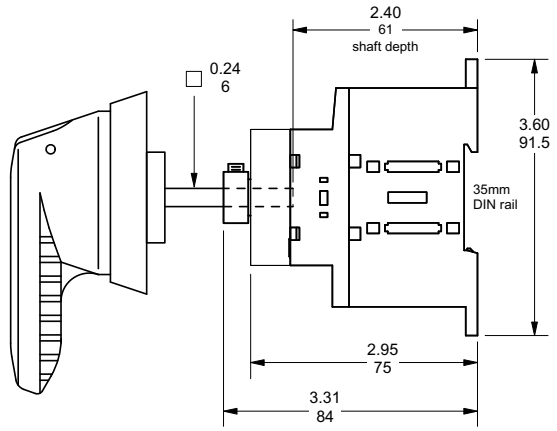

OT30, OT60, OT100F6 — 6 Pole switches

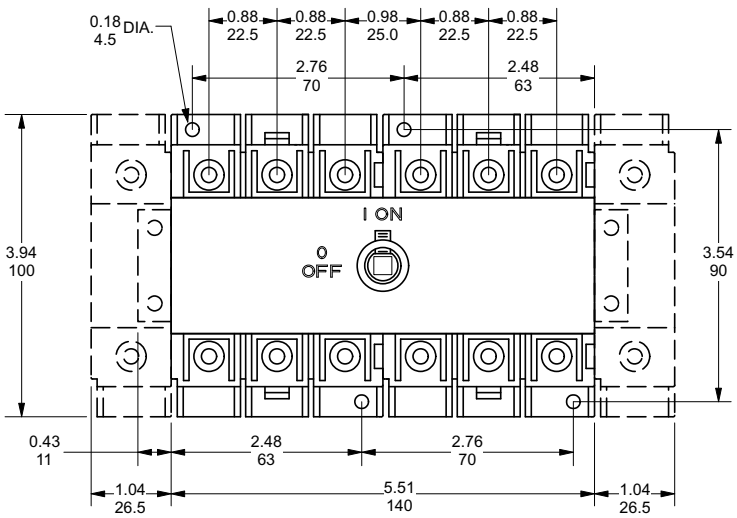

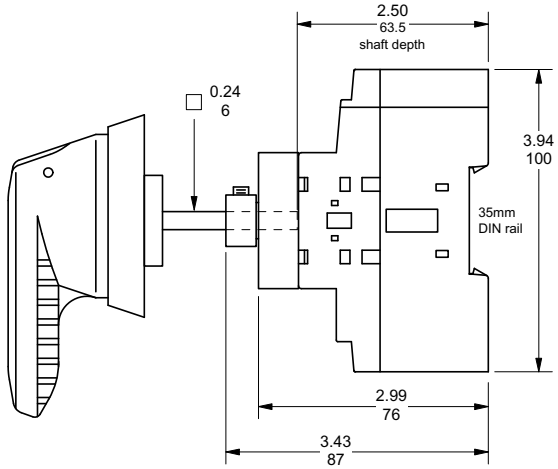

Approximate dimensions
OT16 – OT100F3C
Double throw switches

00.00 Inches
00.00 [Millimeters]

OT16, OT25, OT40F3C – Double throw switches

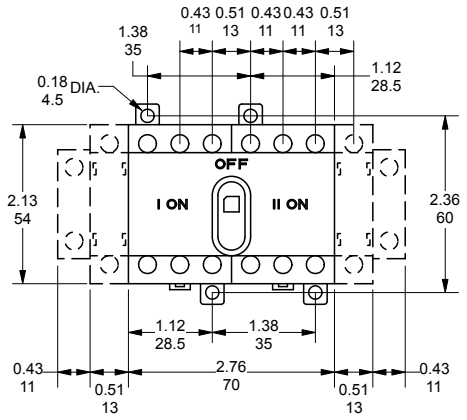

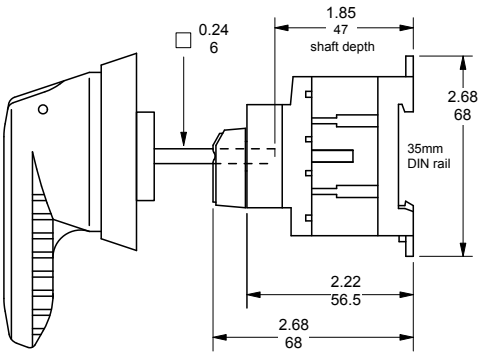

OT45, OT63, OT80F3C – Double throw switches

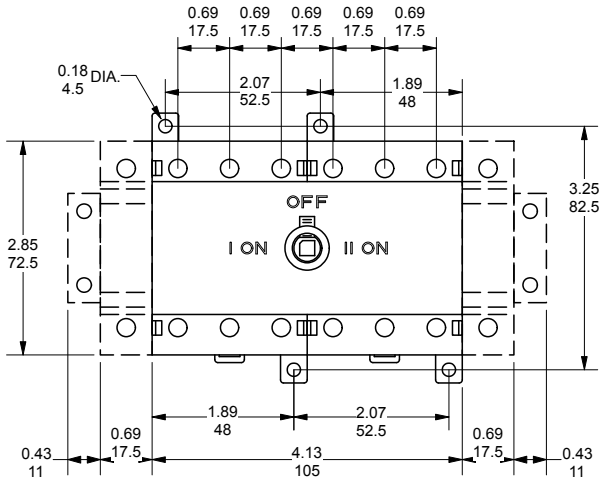

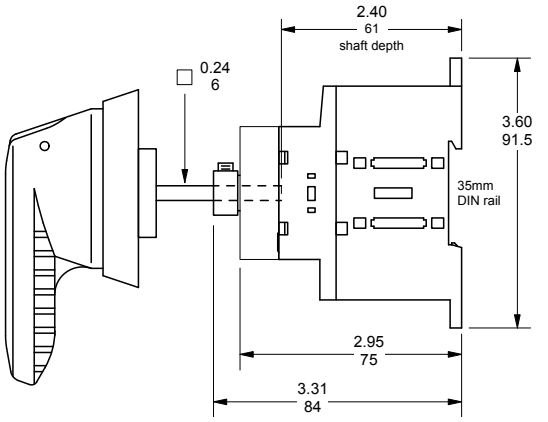

OT30, OT60, OT100F3C – Double throw switches

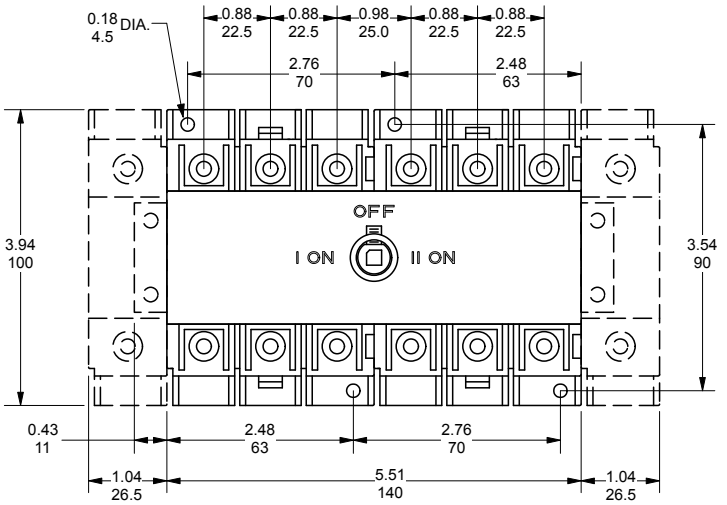

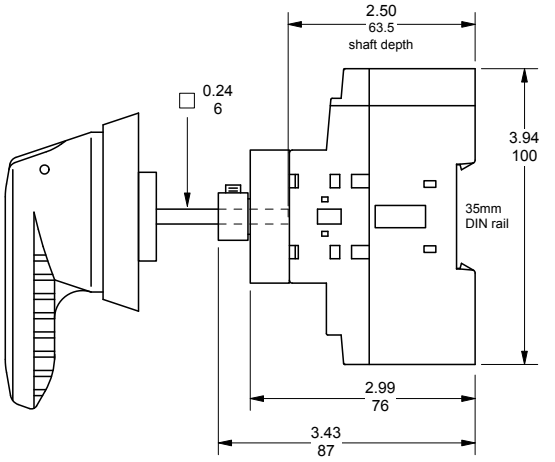

Approximate dimensions
OT200_ — OT400_

00.00
00.00
Inches
[Millimeters]

OT200U03

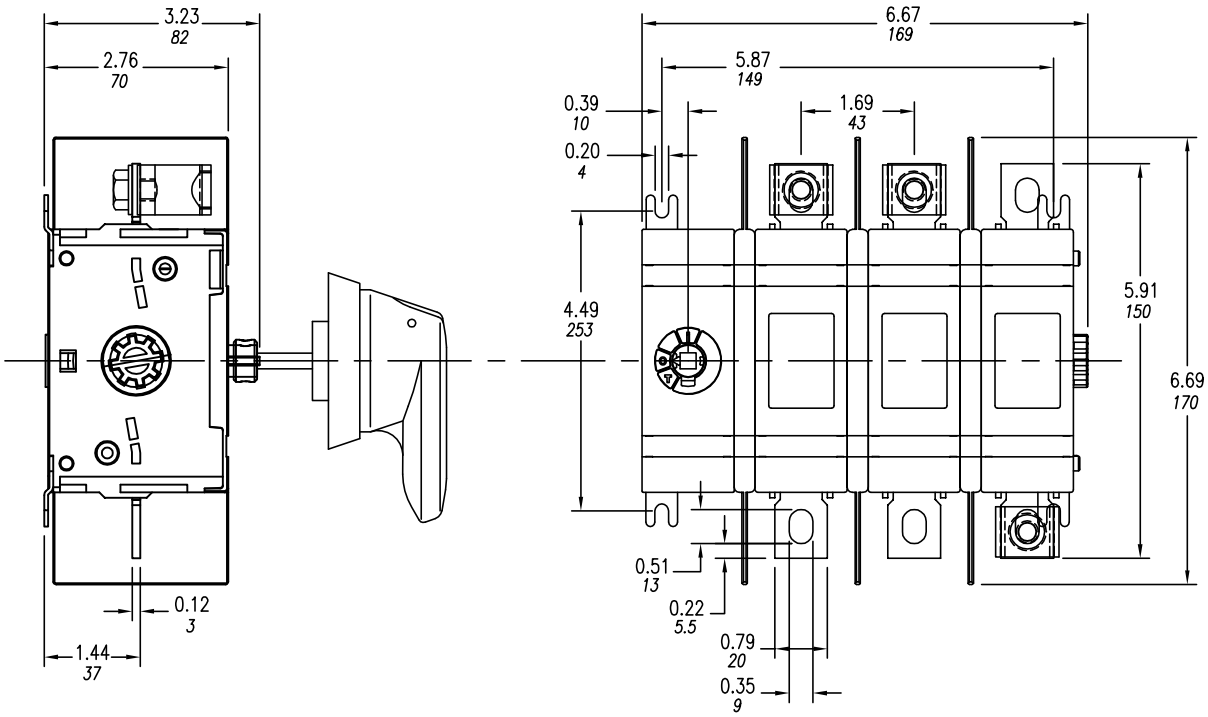

OT400U03

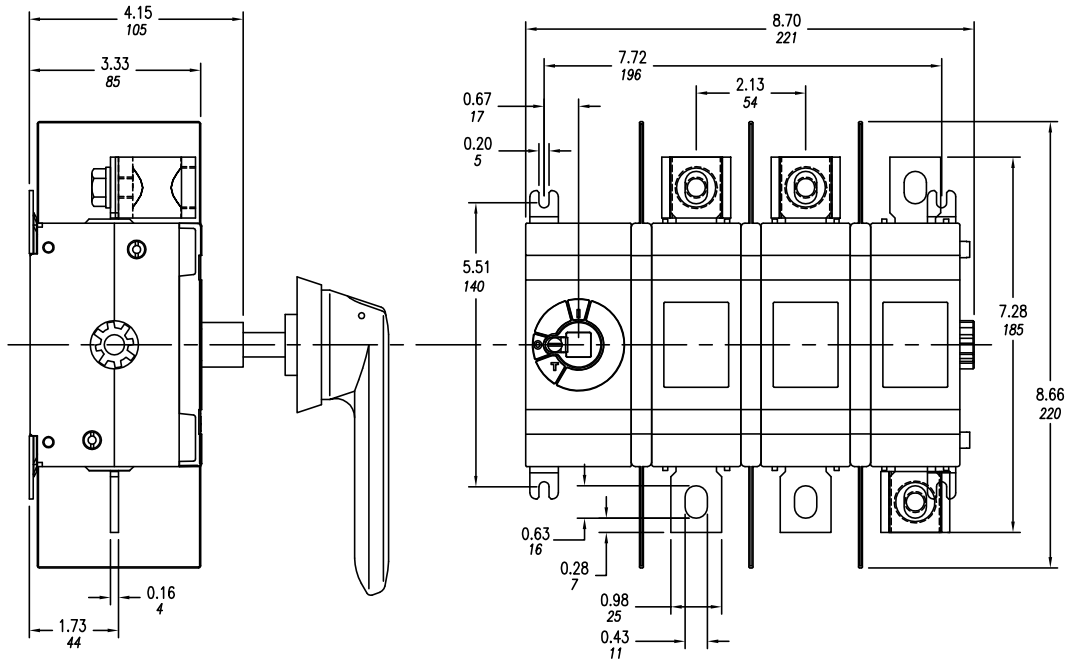

Approximate dimensions
OT600U03 – OT800U03

00.00 Inches
00.00 [Millimeters]

OT600U03

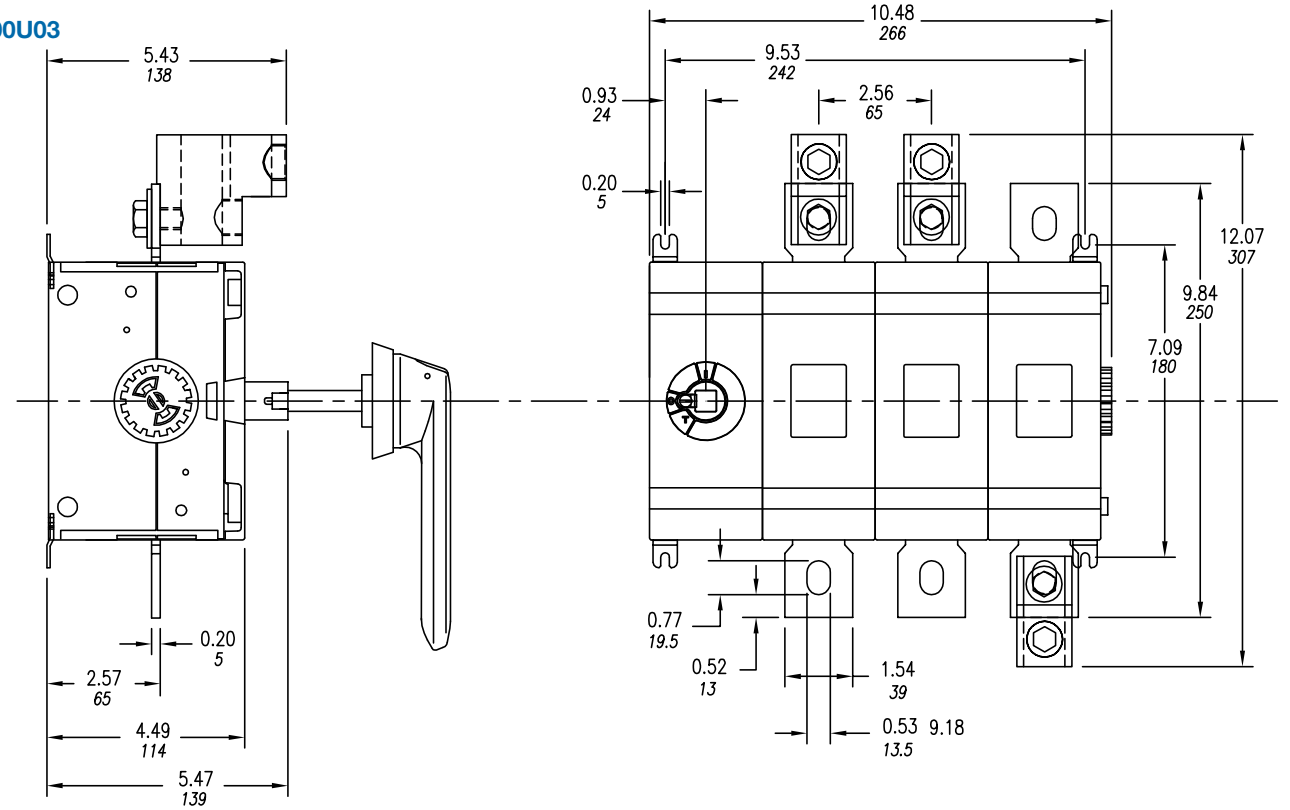

OT800U03

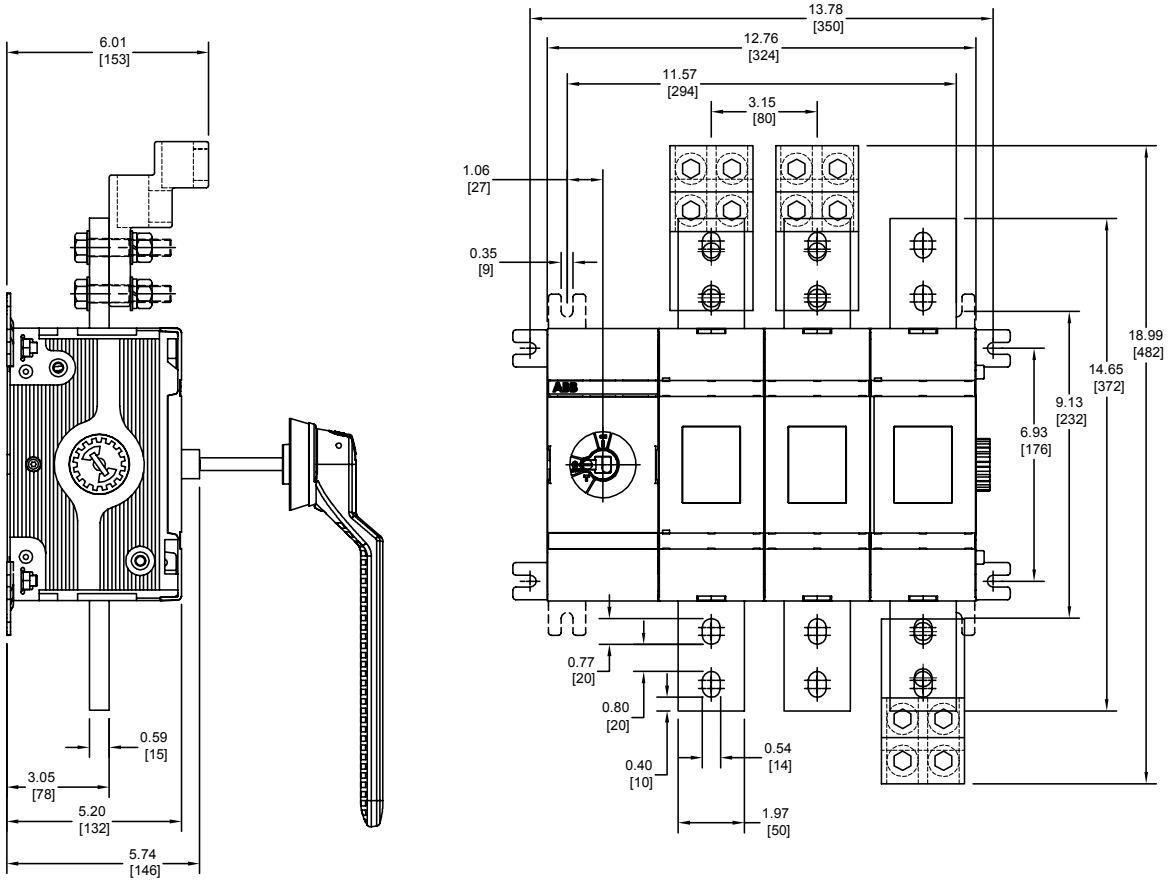

Approximate dimensions
OT1200U03 – OETL-NF1600

00.00
00.00
Inches
[Millimeters]

OT1200U03

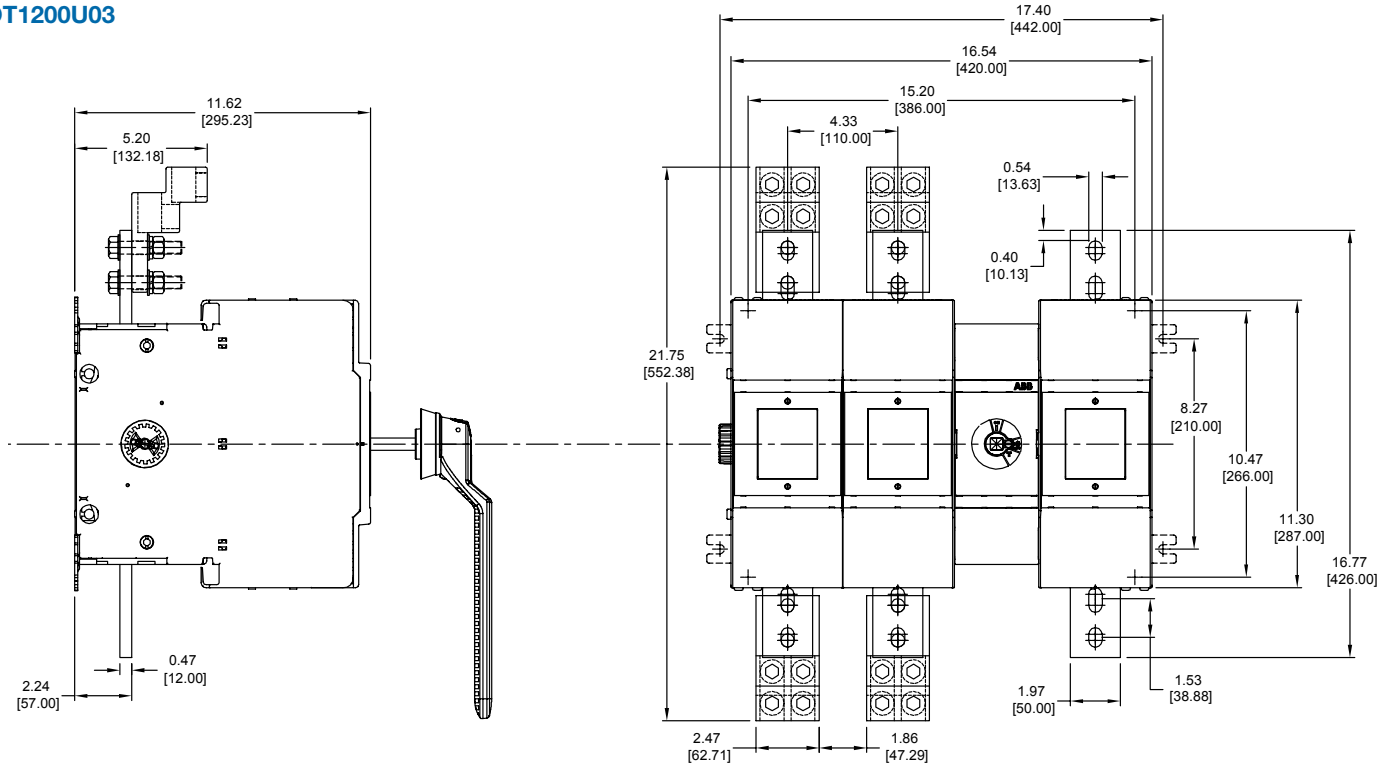

OETL-NF1600

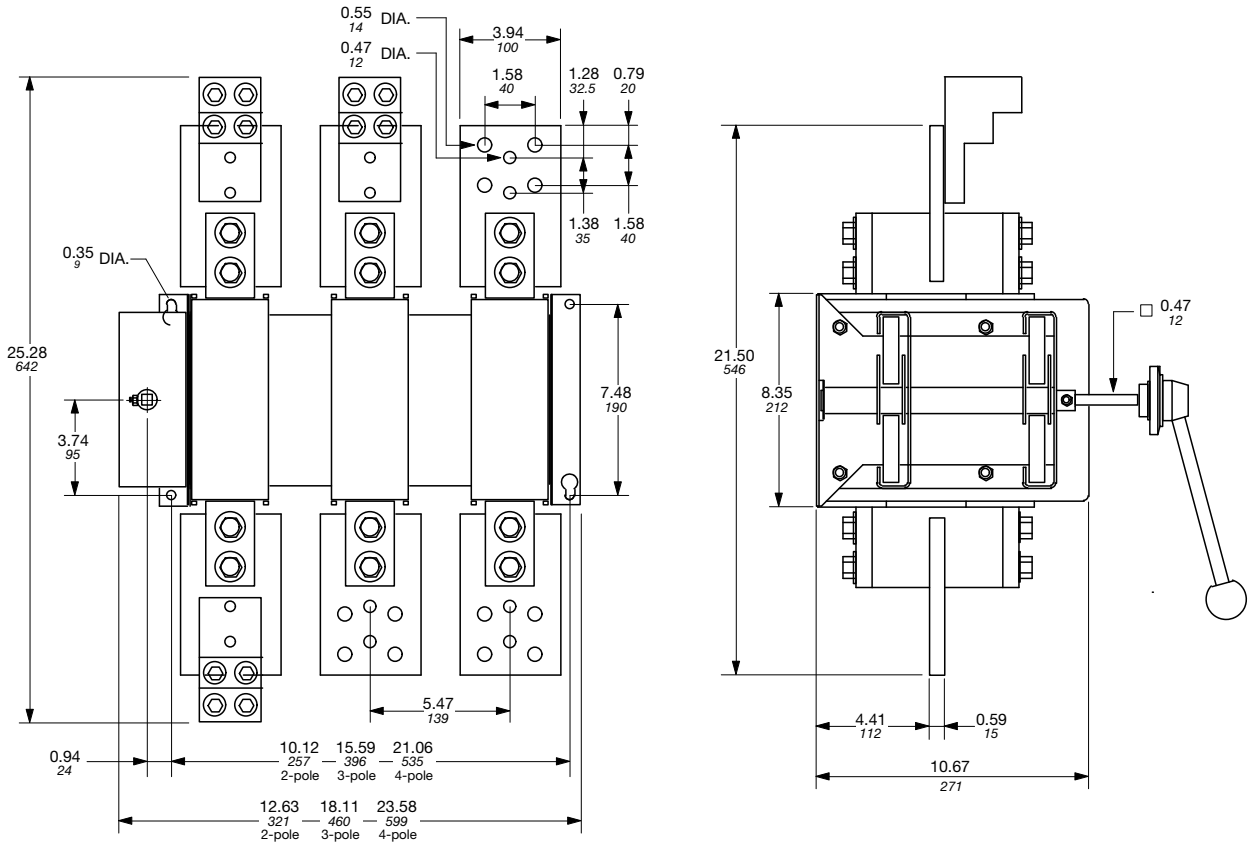

19

Approximate dimensions
OETL-NF2000 – OETL-NF3150

00.00 / 00.00 Inches [Millimeters]

OETL-NF2000 – OETL-NF3150

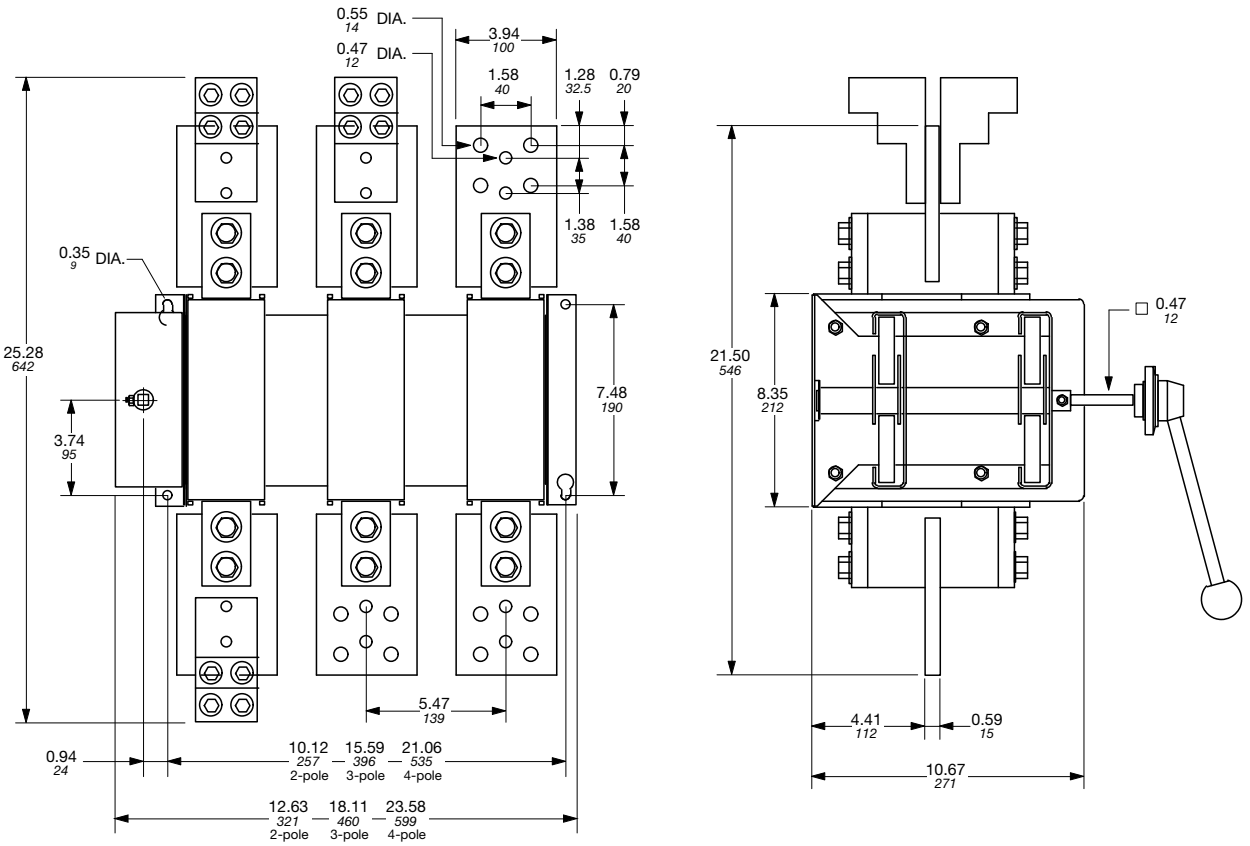

Approximate dimensions
OS30FA_12 — OS60GJ12

00.00
00.00
Inches
[Millimeters]

OS30FA_12

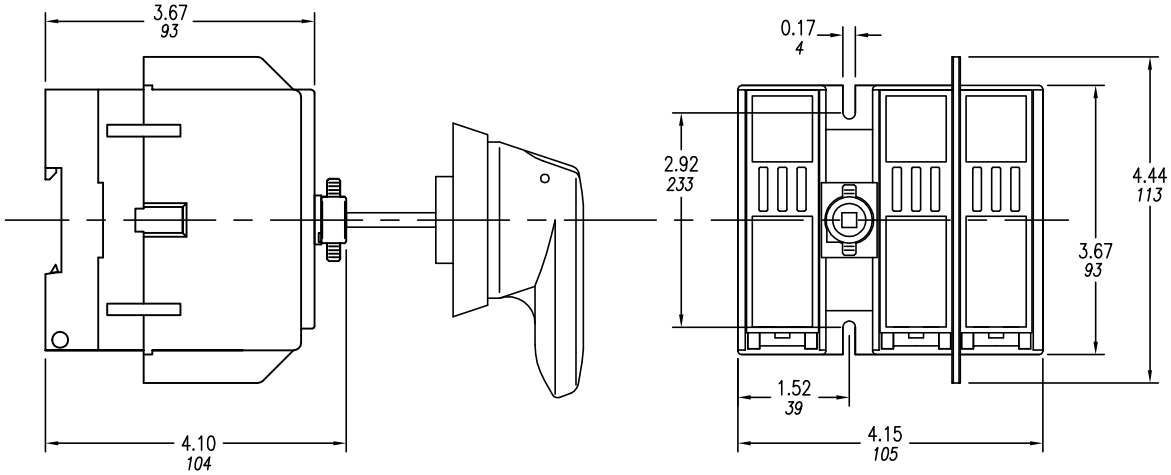

OS60GJ12

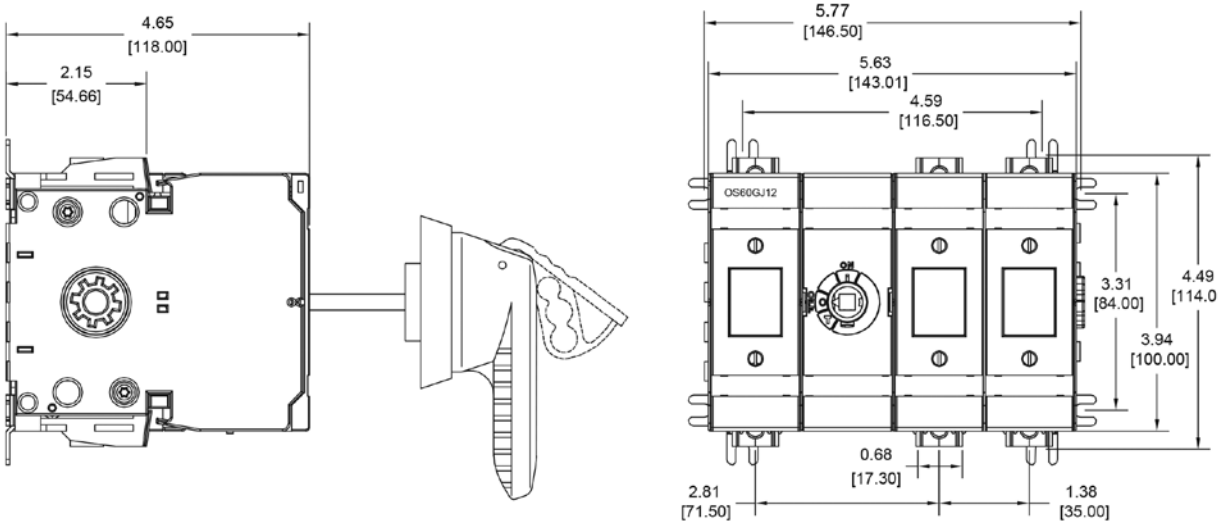

19

Approximate dimensions
OS100GJ03 — OS200J03

00.00 / 00.00 Inches [Millimeters]

OS100GJ03

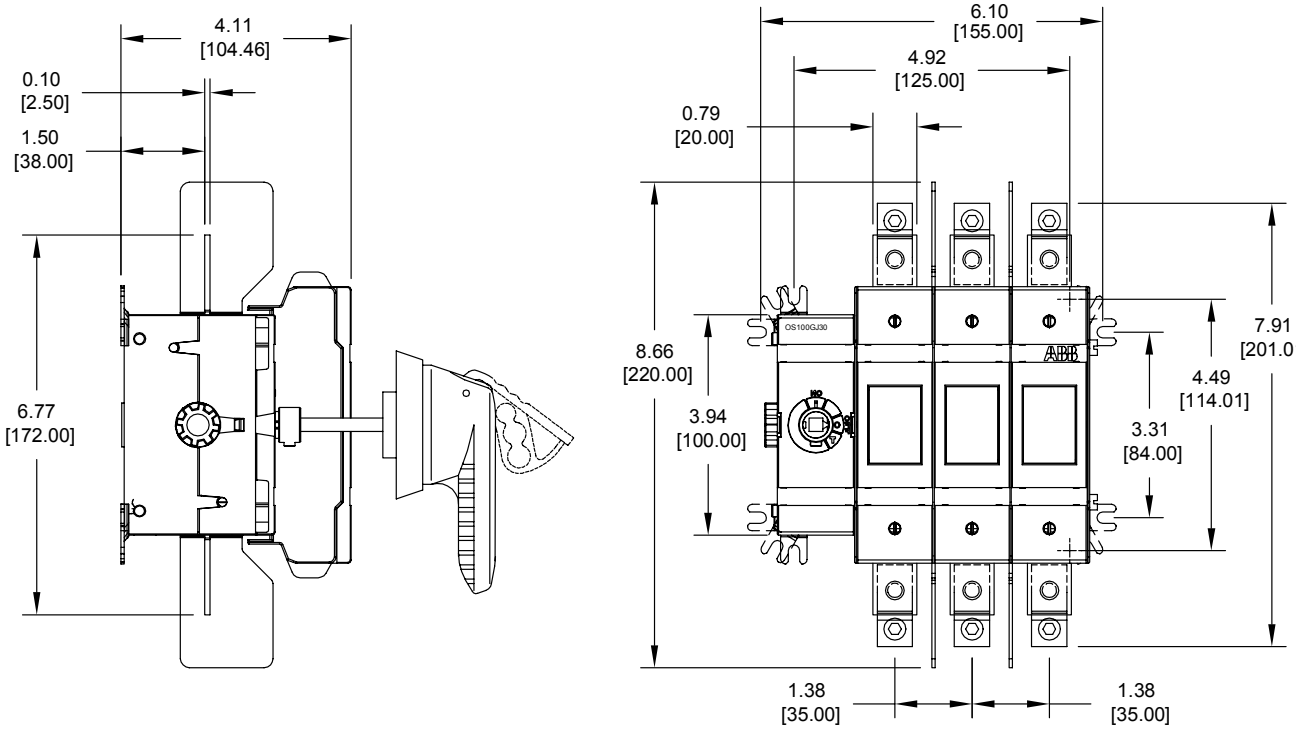

OS200J03

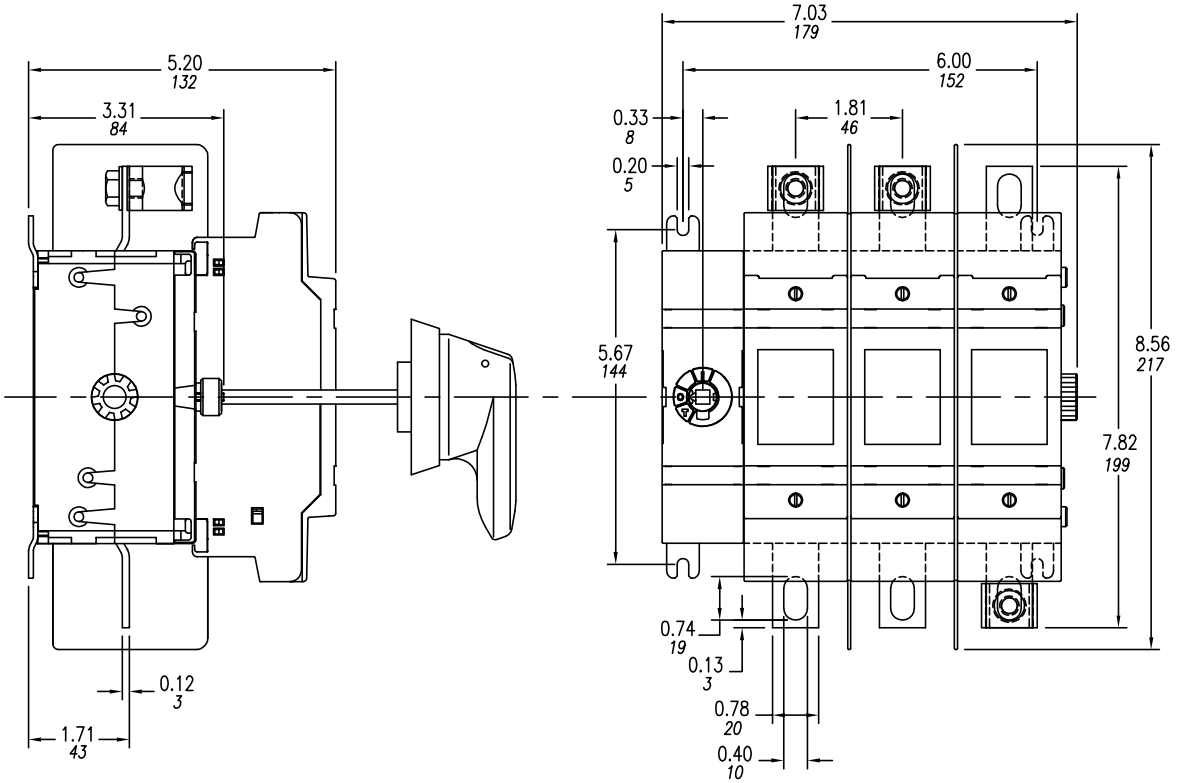

Approximate dimensions
OS400J03 — OS600J03

00.00
00.00
Inches
[Millimeters]

OS400J03

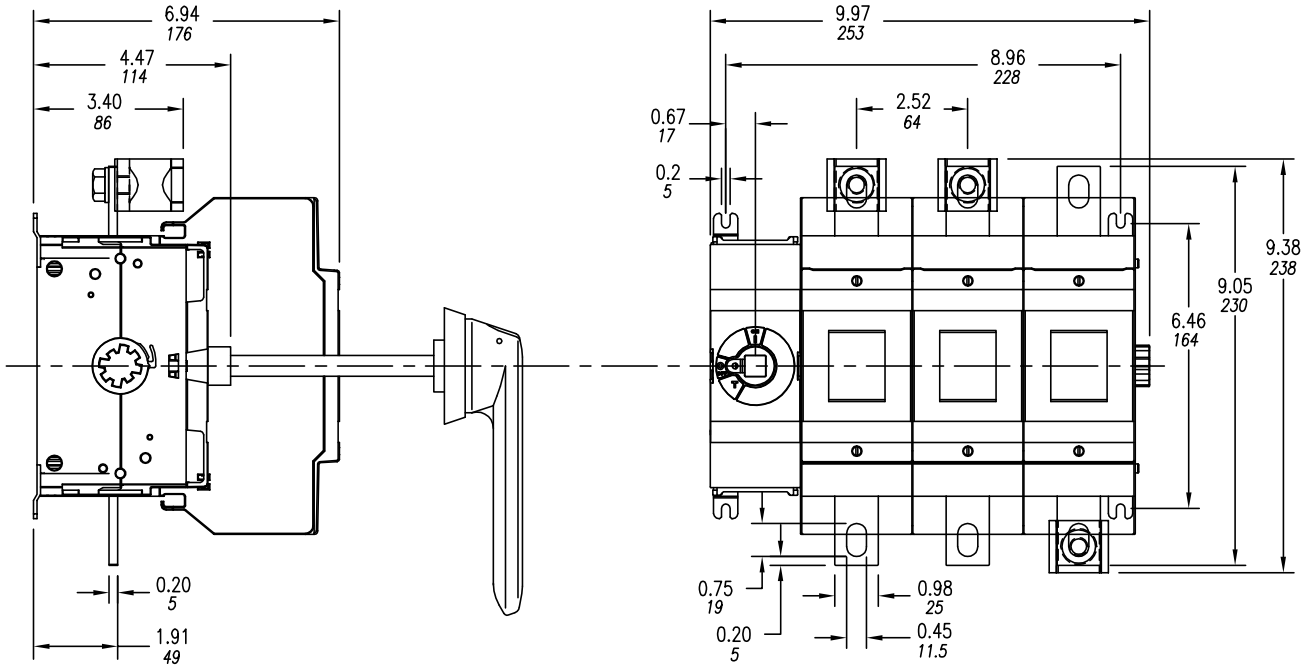

OS600J03

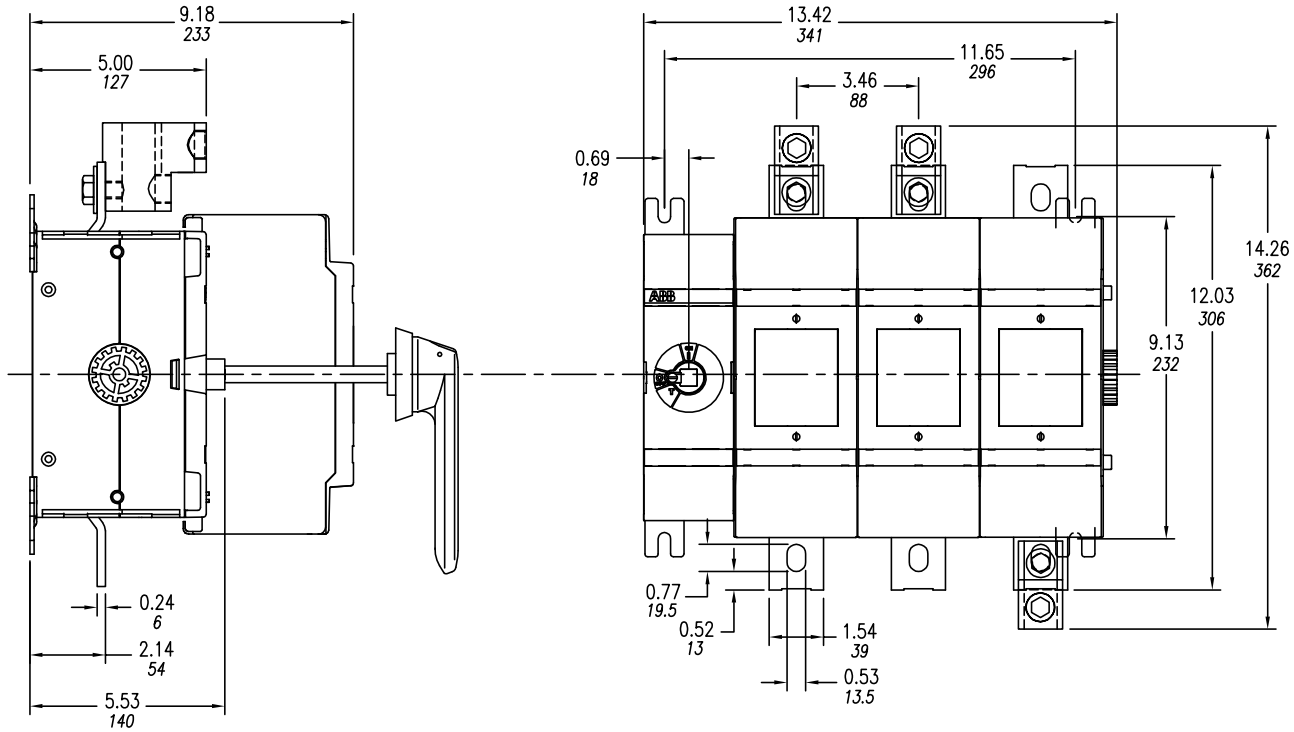

19

Approximate dimensions
OS800L03 — OS1200L03

00.00 Inches
00.00 [Millimeters]

OS800L03

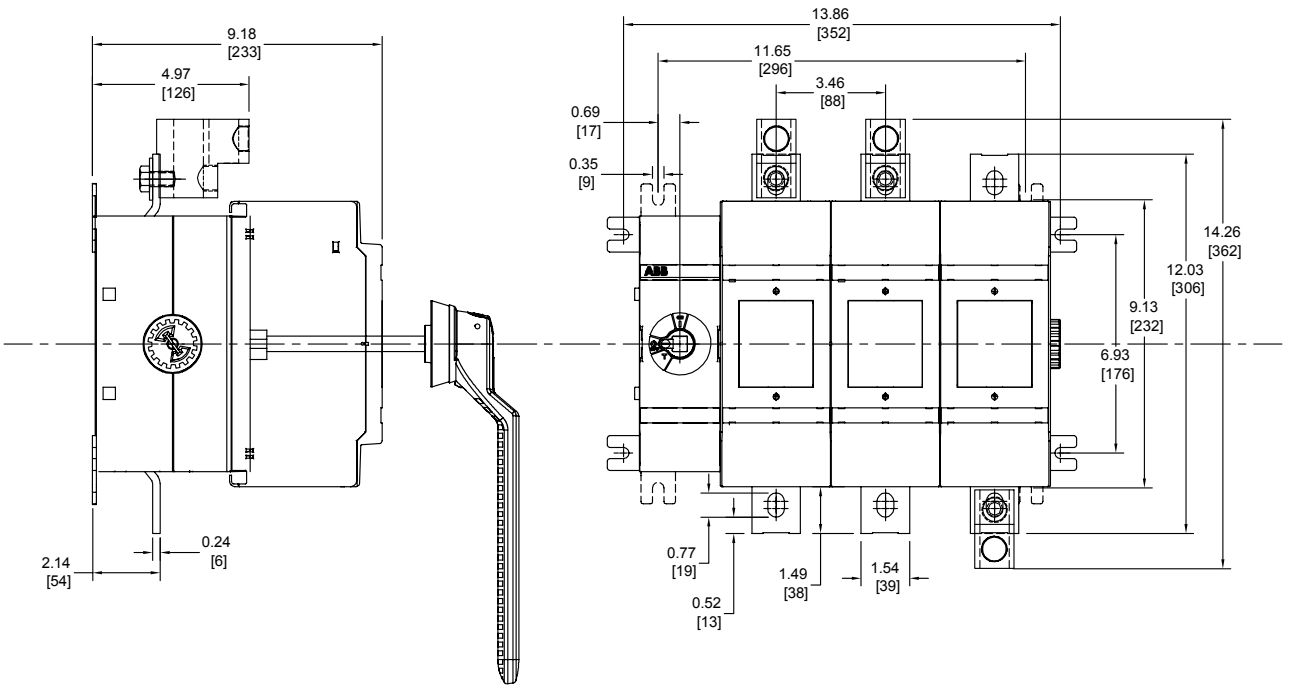

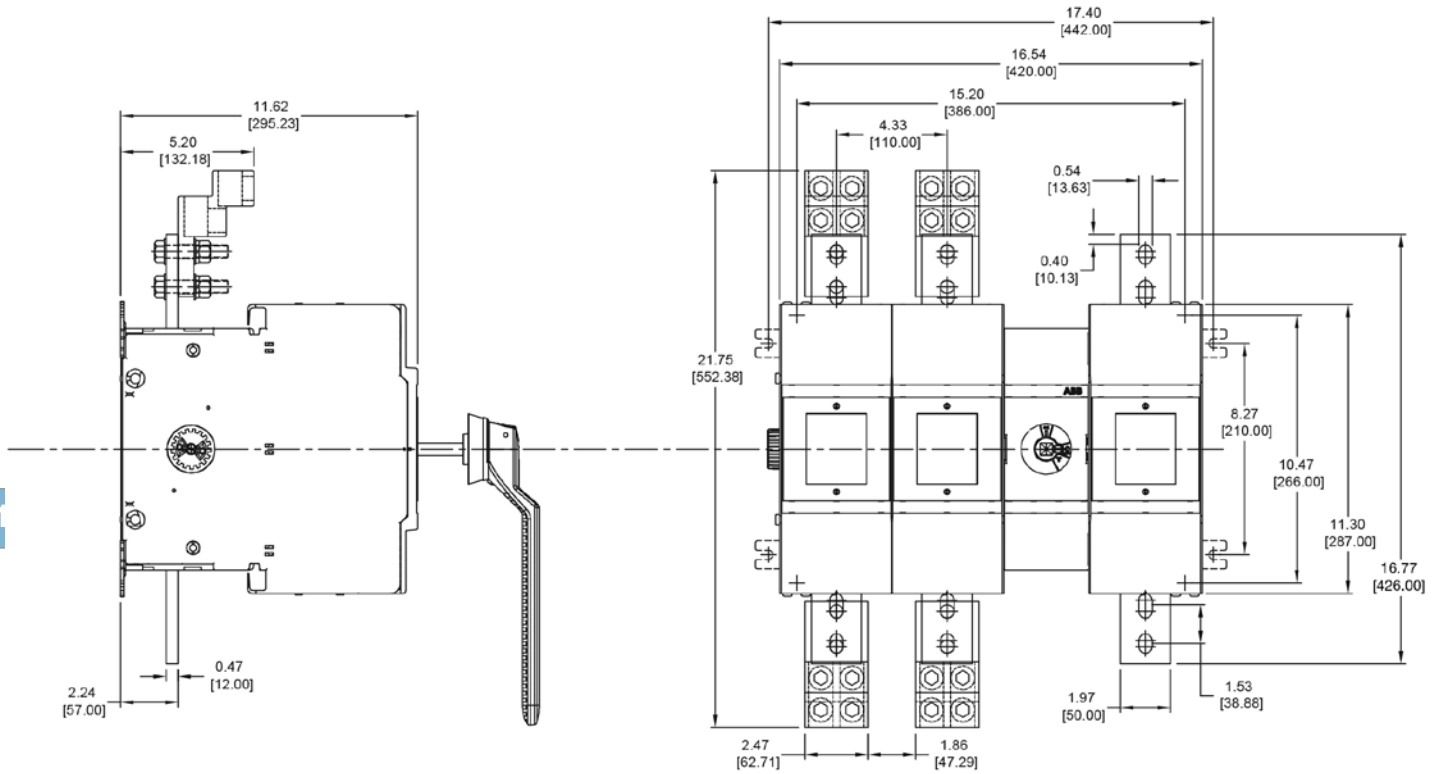

Approximate dimensions
for Terminal lugs

00.00
00.00
Inches
[Millimeters]

OZXA-24

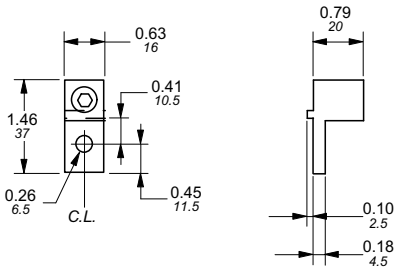

OZXA-30

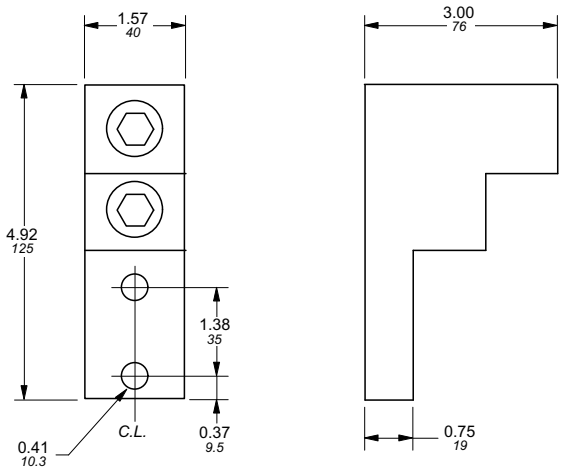

OZXA-28 & OZXA-28/2

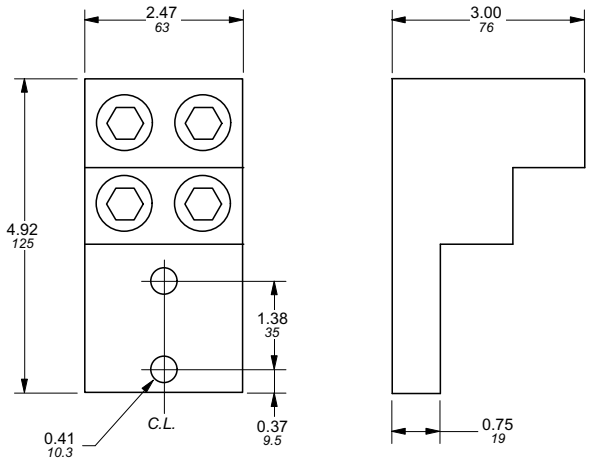

OZXA-400

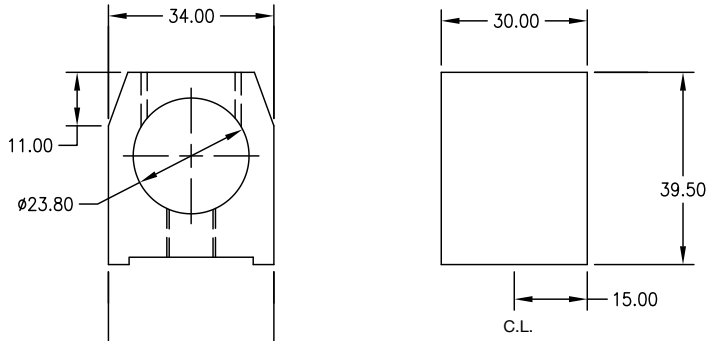

OZXA-200

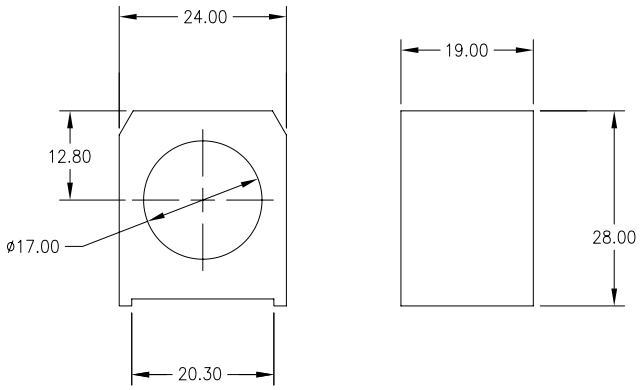

19

Approximate dimensions
for Terminal lugs

00.00 Inches
00.00 [Millimeters]

OZXA-800

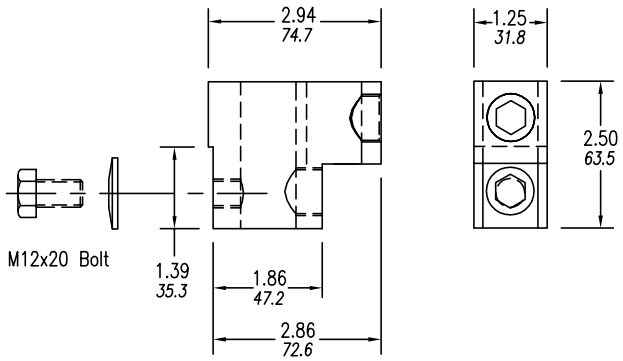

OZXA-406

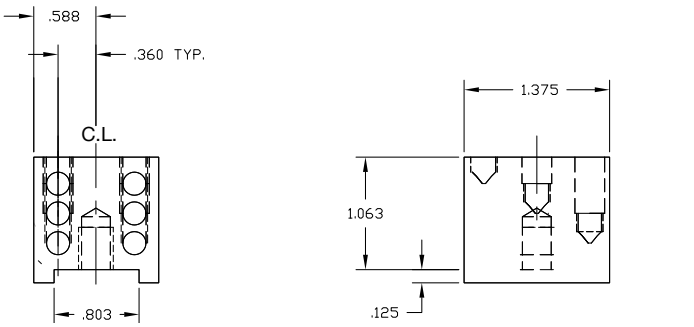

OZXA-32

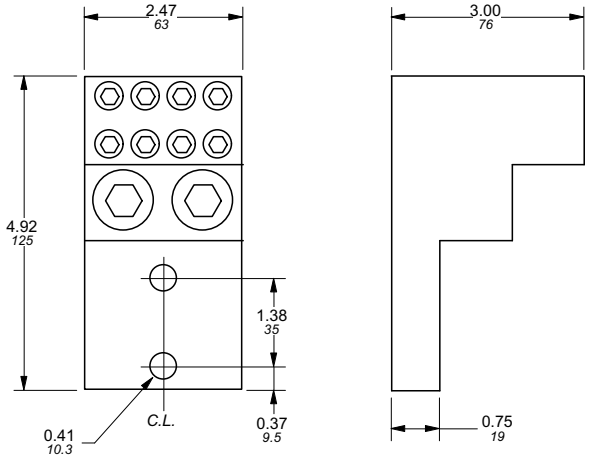

OZXA-1200

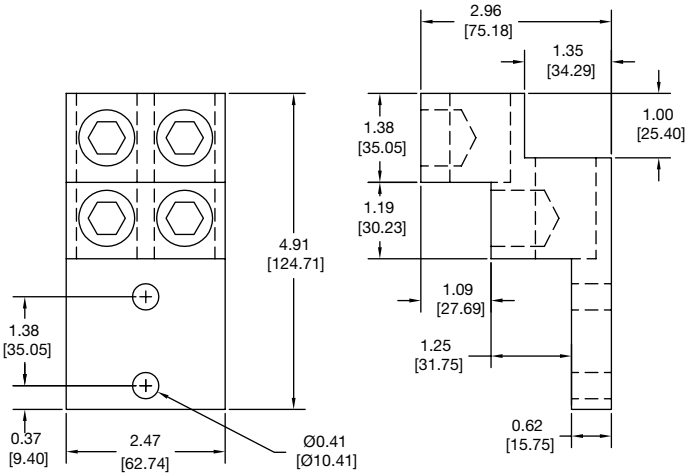

Approximate dimensions
for 16A – 100A conversion mechanisms

00.00 / 00.00 Inches [Millimeters]

6 or 8 pole — OTZW8

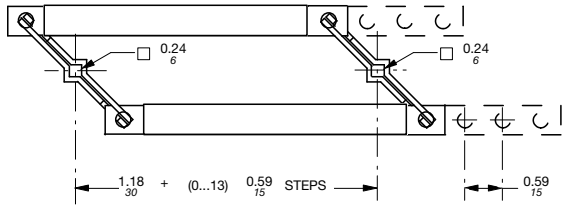

For installation of 6 or 8 pole, transfer and bypass mechanisms, the following minimum and maximum mounting dimensions are given below.

OTZW8 in combination with:	Minimum inches/mm	Maximum inches/mm
OT16F3, OT25F3, OT40F3	3.07/78	N/A
OT63F3, OT80F3	3.74/95	N/A
OT30F3, OT60F3, OT100F3	3.82/97	N/A

Double throw switch — OTZW6, OTZW6X

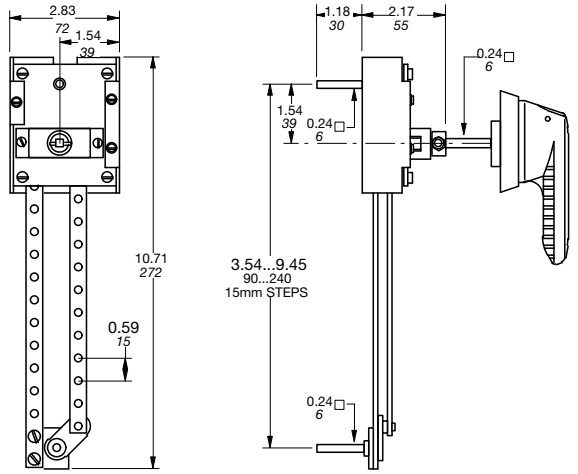

OESA-ZW1, OESA-ZW1X in combination with:	Minimum inches/mm	Maximum① inches/mm
OT16F3, OT25F3, OT40F3	4.61/117	6.57/167
OT63F3, OT80F3	5.31/135	7.28/185
OT30F3, OT60F3, OT100F3	4.84/123	6.81/173

Bypass switch — OTZW17, OTZW17X

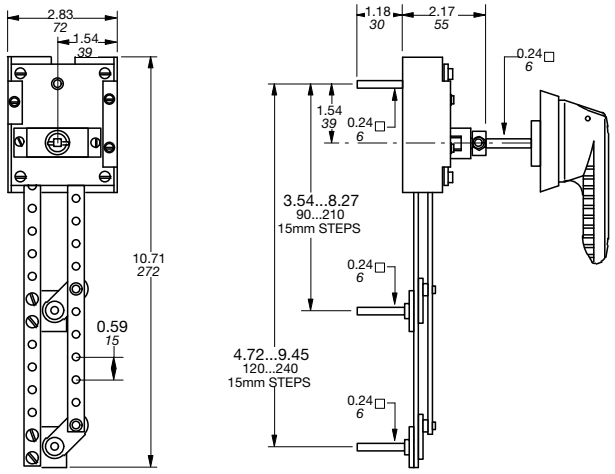

OTZW17, OTZW17X in combination with:	Minimum inches/mm	Maximum① inches/mm
OT16F3, OT25F3, OT40F3	4.61/117	6.57/167
OT63F3, OT80F3	5.31/135	7.28/185
OT30F3, OT60F3, OT100F3	4.84/123	6.81/173

Mechanical interlock — OETL-ZW24

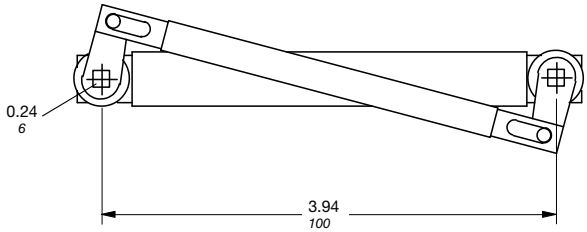

OETL-ZW24 in combination with:	Minimum inches/mm	Maximum① inches/mm
OT16F3, OT25F3, OT40F3	3.39 / 86	—
OT63F3, OT80F3	4.09 / 104	—
OT30F3, OT60F3, OT100F3	4.13 / 105	—

① Deeper enclosures will require a longer shaft. Please select a 6mm shaft from page 19.5.

Approximate dimensions
for 125 – 200A conversion mechanisms

00.00 / 00.00 Inches [Millimeters]

6 or 8 pole — OESA-ZW2

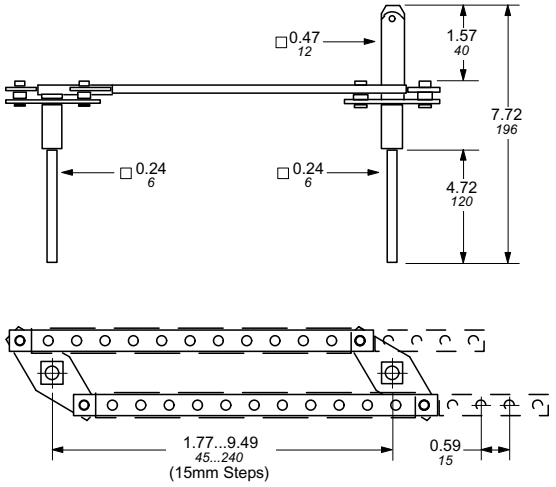

For installation of 6 or 8 pole, transfer and bypass mechanisms, the following minimum and maximum mounting dimensions are given below.

OESA-ZW2 in combination with:	Minimum inches/mm	Maximum inches/mm
OT160 - OT200	5.35/136	9.49/241

NOTE: Deeper enclosures will require a longer shaft. Please select a 12mm shaft from page 19.7 and an OETL-ZX95 shaft extension coupler from page 19.10.

Double throw switch — OESA-ZW1, OESA-ZW1X

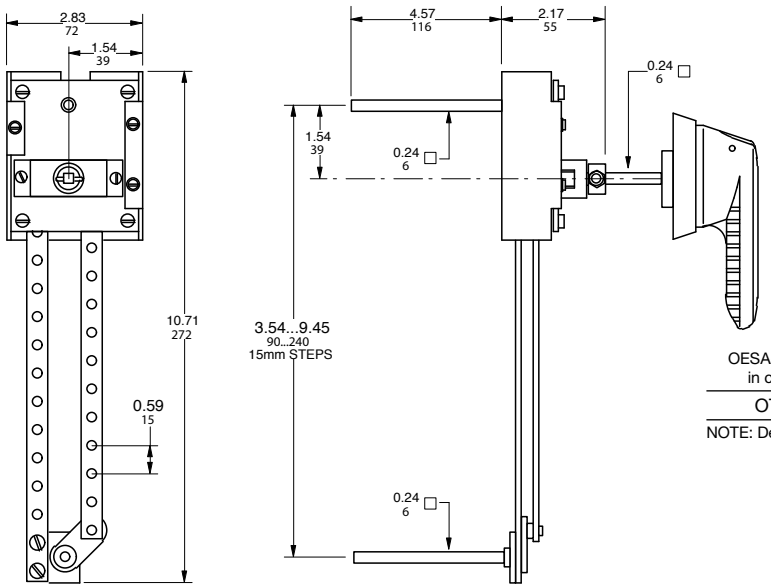

OESA-ZW1, OESA-ZW1X in combination with:	Minimum inches/mm	Maximum inches/mm
OT160 - OT200	4.61/117	6.57/167

NOTE: Deeper enclosures will require a longer shaft. Please select a 6mm shaft from page 19.7

19

Mechanical interlock — OTZW10

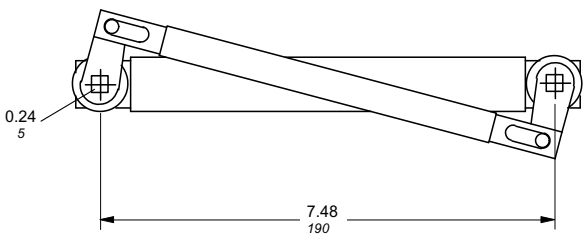

OTZW10 in combination with:	Minimum inches/mm	Maximum inches/mm
OT160 - OT200	4.13 / 105	—

NOTE: Deeper enclosures will require a longer shaft. Please select a 6mm shaft from page 19.7

Approximate dimensions
for 400A – 1200A conversion mechanisms

00.00
00.00
Inches
[Millimeters]

6 or 8 pole — OETL-ZW9

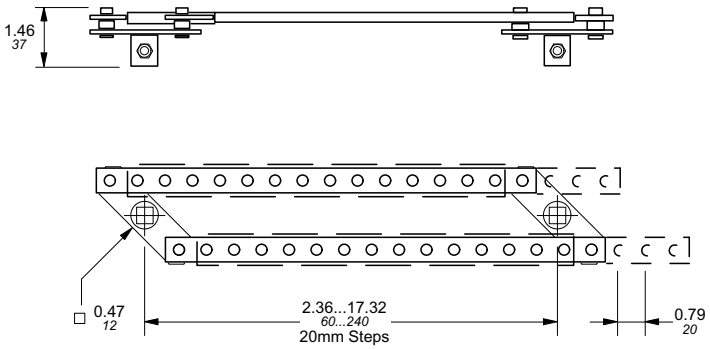

For installation of 6 or 8 pole, transfer and bypass mechanisms, the following minimum and maximum mounting dimensions are given below.

OETL-ZW9 in combination with:	Minimum inches/mm	Maximum inches/mm
OT400	7.52/191	N/A
OT600	7.52/191	N/A
OETL-NF800A	7.52/191	N/A
OETL-NF1200	7.52/191	N/A

NOTE: Handle not included

Double throw — OETL-ZW12

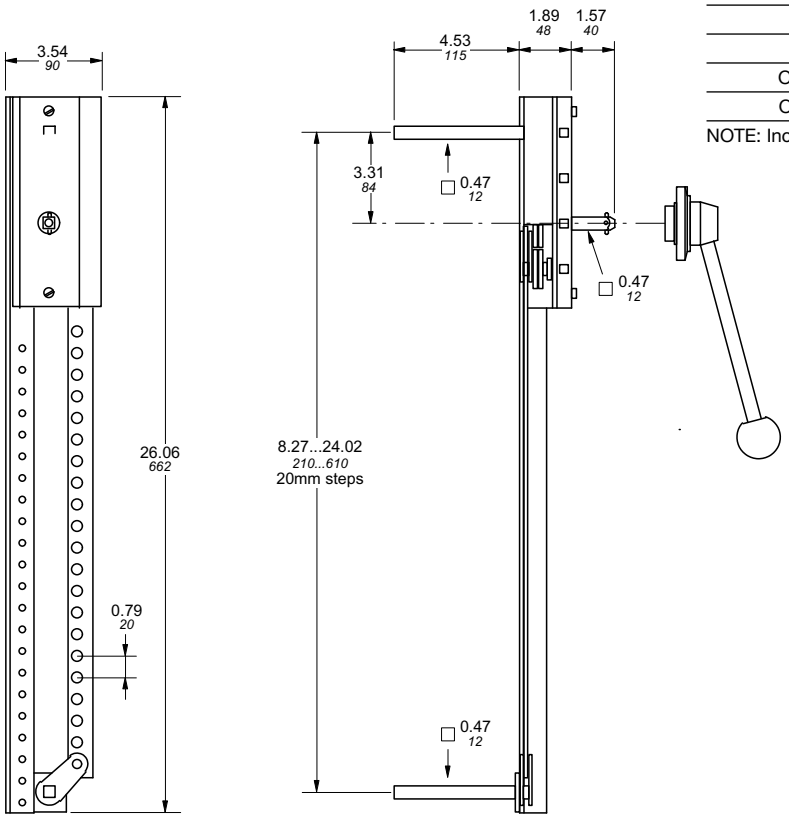

OETL-ZW12 in combination with:	Minimum inches/mm	Maximum① inches/mm
OT400	8.19/208	11.73/298
OT600	8.19/208	11.73/298
OETL-NF800A	8.19/208	11.73/298
OETL-NF1200	8.19/208	11.73/298

NOTE: Includes YASDA-21 handle

① Deeper enclosures will require a longer shaft. Please select a 12mm shaft from page 19.7 and an OETL-ZX95 shaft extension coupler from pg. 18.10.

Approximate dimensions
for 400A – 3150A conversion mechanisms

00.00 Inches
00.00 [Millimeters]

Bypass switch — OETL-ZW13

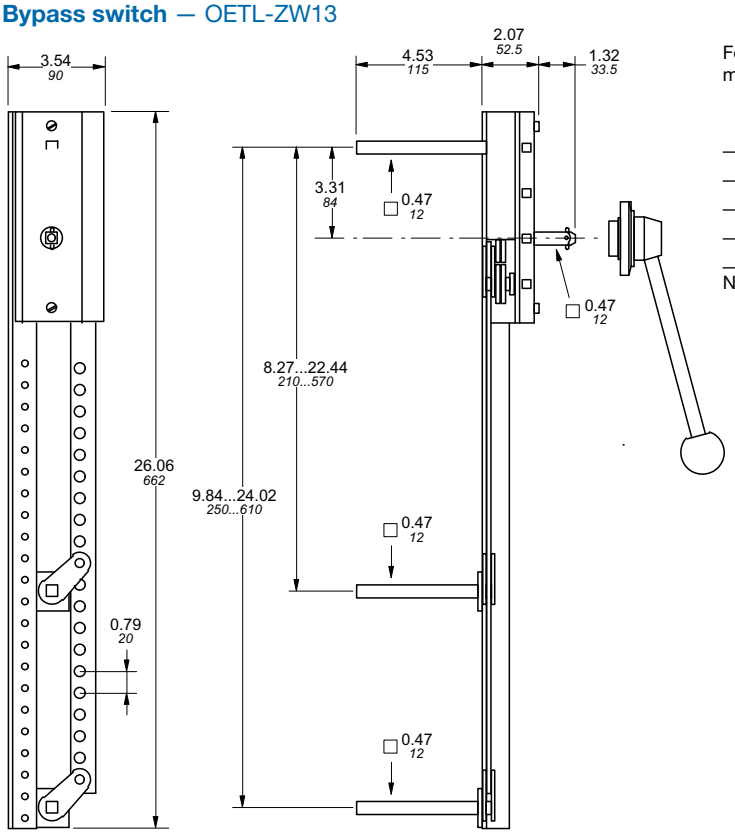

For installation of 6 or 8 pole, transfer and bypass mechanisms, the following minimum and maximum mounting dimensions are given below.

OETL-ZW12 in combination with:	Minimum inches/mm	Maximum① inches/mm
OT400	8.19/208	11.73/298
OT600	8.19/208	11.73/298
OETL-NF800A	8.19/208	11.73/298
OETL-NF1200	8.19/208	11.73/298

NOTE: Includes YASDA-21 handle

Mechanical interlock — OETL-ZW3, OETL-ZW14, OETL-ZW15

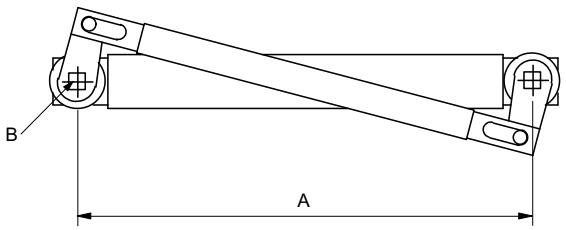

Dimensions in Inches & *mm*

	A	B
OETL-ZW3	11.81 *300.0*	0.47 *12.0*
OETL-ZW14	9.84 *250.0*	0.47 *12.0*
OETL-ZW15	19.69 *500.0*	0.47 *12.0*

OETL-ZW3, 14 & 15 in combination with:	Minimum inches/mm	Maximum① inches/mm
OT400 & OT600	6.50/165	—
OETL-NF800 – OETL-NF1200	6.30/160	—
OETL-NF1600 – OETL-NF3150	12.00/305	—

NOTE: Handle(s) not included.

NOTE: OETL-ZW15 is the only mechnical interlock OETL-NF1200 – OETL-NF3150 can use.

① Deeper enclosures will require a longer shaft. Please select a 12mm shaft from page 19.7 and an OETL-ZX95 shaft extension coupler from page 19.10.

Approximate dimensions
for Handles

00.00
00.00
Inches
[Millimeters]

Selector handles for base and DIN rail mounted switches

OH_S1AH1 & OH_S3AH1

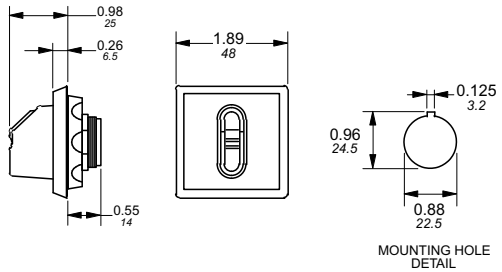

OH_S2A_

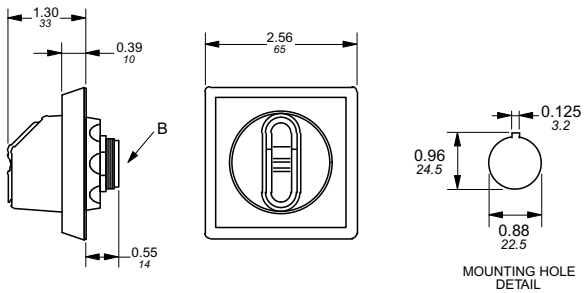

Selector handles for door mounted switches

OH_S1P_ & OH_S3P_

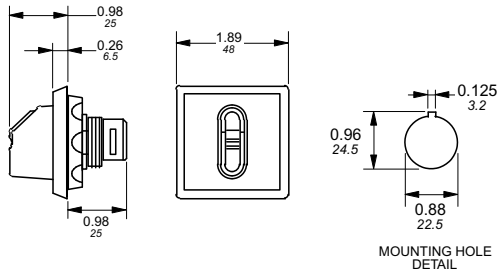

OH_S1R_ & OH_S3R_

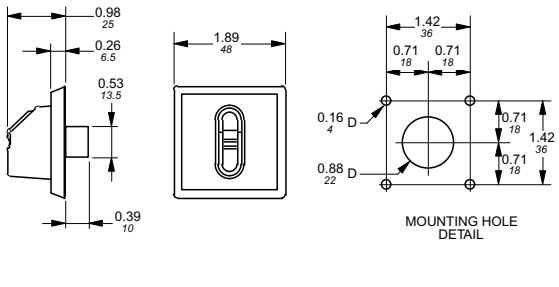

OH_S2P_

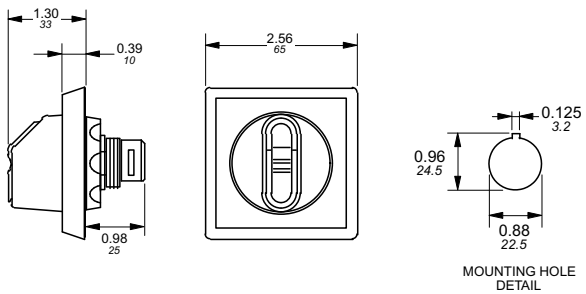

OH_S2R_

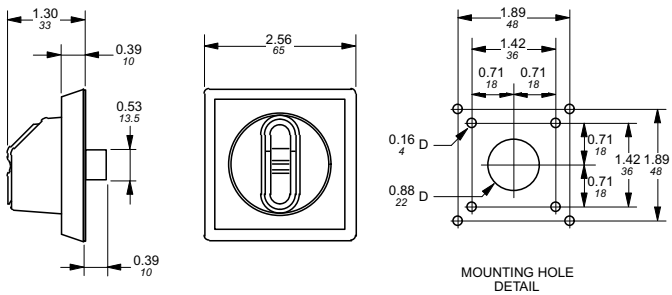

19

Approximate dimensions
for Handles

00.00 Inches
00.00 [Millimeters]

Pistol handles

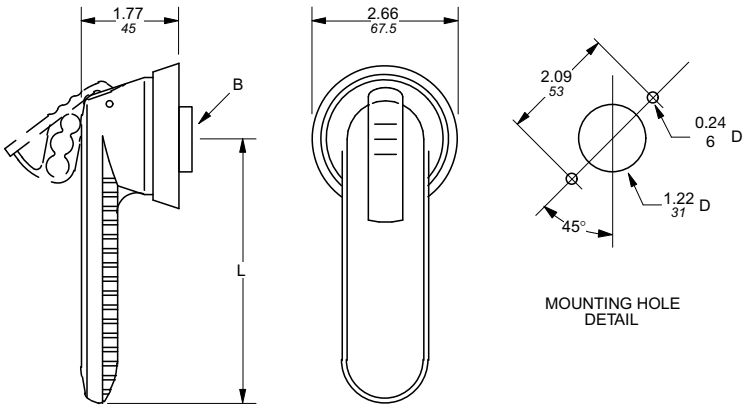

MOUNTING HOLE DETAIL

A Catalog number	L Inches/ mm	□B Shaft size Inches/ mm	NEMA / UL Type
OH_45J6	1.8/45	0.24/6	1, 3R, 12
OH_65J6	2.6/65	0.24/6	1, 3R, 12
OH_80J6	3.1/80	0.24/6	1, 3R, 12
OH_125J12	4.9/125	0.47/12	1, 3R, 12
OH_145J12	5.7/145	0.47/12	1, 3R, 12
OH_175J12	6.9/175	0.47/12	1, 3R, 12
OH_80L6	3.1/80	0.24/6	1, 3R, 4, 4X, 12
OH_145L12	5.7/145	0.47/12	1, 3R, 4, 4X, 12
OH_175L12	6.9/175	0.47/12	1, 3R, 4, 4X, 12

__ = Handle color, B (Black) or Y (Red/Yellow)

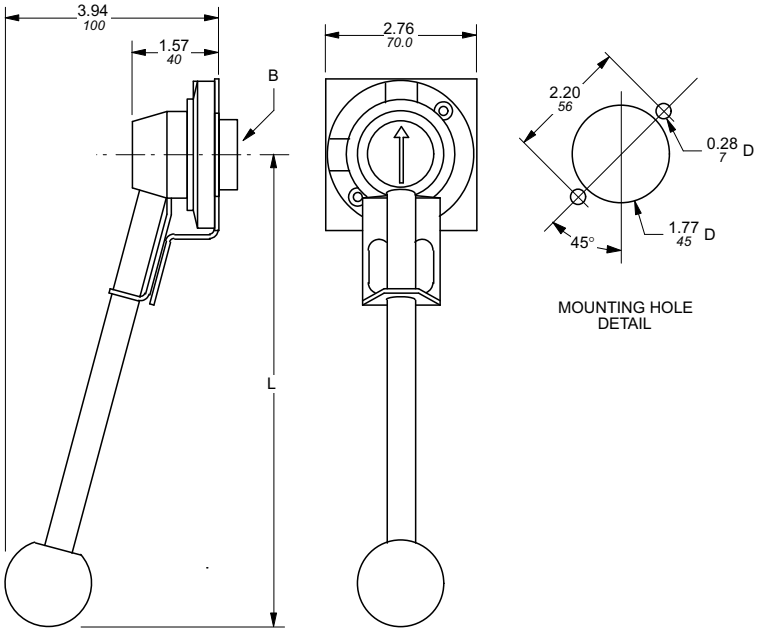

MOUNTING HOLE DETAIL

A catalog number	L inches/mm	□B Shaft size inches/mm	NEMA Type
YASDA-7	8.66/220	0.47/12	1, 3R, 4, 4X, 12
YASDA-8	8.66/220	0.47/12	1, 3R, 4, 4X, 12
YASDA-21	8.66/220	0.47/12	1, 3R, 4, 4X, 12
YASDA-6	12.60/320	0.47/12	1, 3R, 4, 4X, 12

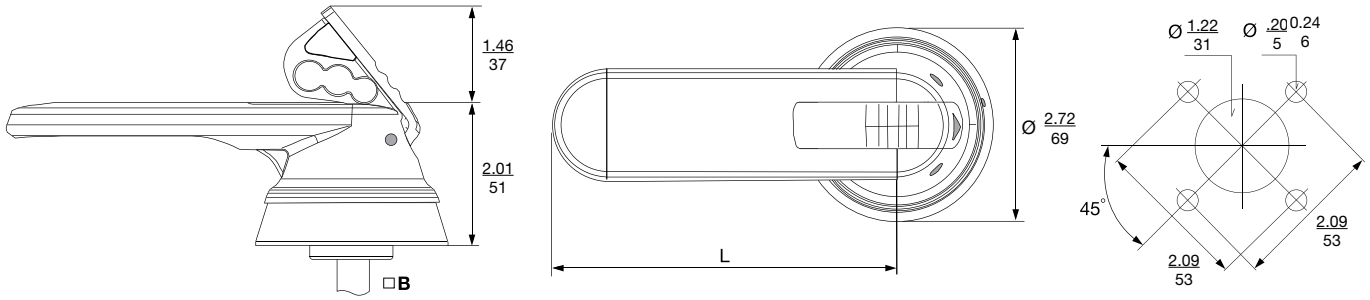

Handle type	OHM65L6	OHM125L12	OHM175L12	OHM275L12
L	2.6/65	4.9/125	6.9/175	10.8/225
□B	.24/6	.47/12	.47/12	.47/12

Approximate dimensions
for Handles

00.00
00.00
Inches
[Millimeters]

OH_274_12

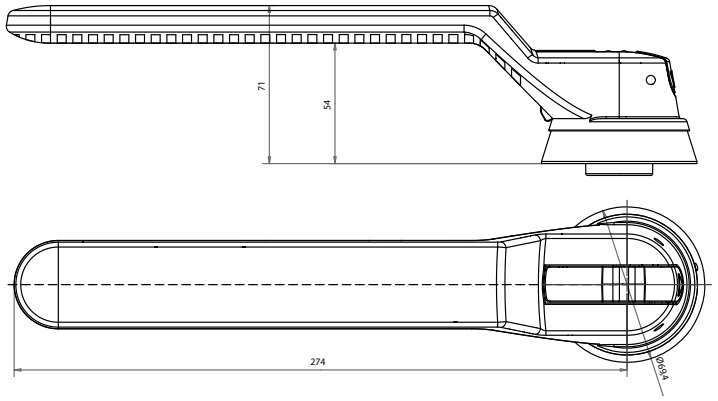

OH_330_12

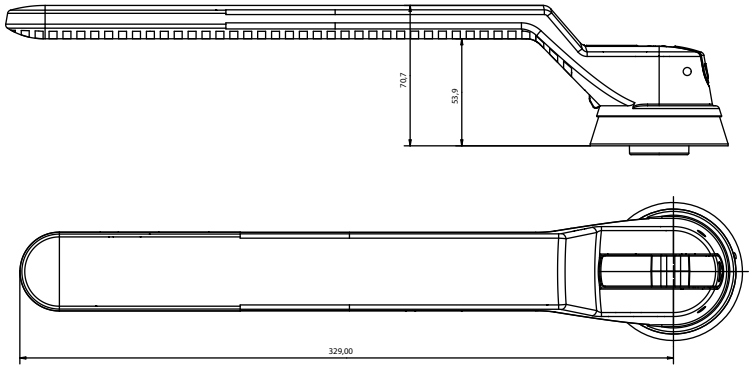

A Catalog number	L inches/mm	B shaft size inches/mm	NEMA Type
OHB274-330	10.75/274	0.47/12	1, 3R, 4, 4X, 12

Approximate dimensions
2, 3 & 4 Pole ②
30A – 1200A Fusible

00.00 / 00.00 Inches [Millimeters]

Fusible

Frame size	Enclosure type	H height	W width	D depth	MH mtg. height	MW mtg. width	Weight
OS30_	1	10.0	8.0	6.0	7.0	7.0	12
	3R	10.0	8.0	6.0	10.75	6.0	12
	4	10.0	8.0	6.0	10.75	6.0	12
	4X SS	10.0	8.0	6.0	10.75	6.0	12
	4X Plastic	10.0	8.0	8.0	10.75	6.0	8.0
	12	10.0	8.0	6.0	10.75	6.0	12
OS60_	1	14.0	12.0	8.0	7.0	7.0	13
	3R	14.0	12.0	8.0	10.75	6.0	13
	4	14.0	12.0	8.0	10.75	6.0	13
	4X SS	14.0	12.0	8.0	10.75	6.0	13
	4X Plastic	10.0	8.0	8.0	10.75	6.0	9.0
	12	14.0	12.0	8.0	10.75	6.0	13
OS100_	1	14.0	12.0	8.0	11.0	9.0	22
	3R	14.0	12.0	8.0	14.75	10.0	22
	4	14.0	12.0	8.0	14.75	10.0	22
	4X SS	14.0	12.0	8.0	14.75	10.0	22
	4X Plastic	14.0	12.0	8.0	14.75	10.0	16
	12	14.0	12.0	8.0	14.75	10.0	22
OS200_	1	24.0	16.0	8.0	25.5	14.5	75
	3R	24.0	16.0	8.0	25.5	14.5	75
	4	24.0	16.0	8.0	25.5	14.5	75
	4X SS	24.0	16.0	8.0	25.5	14.5	75
	4X Plastic	①	①	①	①	①	①
	12	24.0	16.0	8.0	25.5	14.5	75

Frame size	Enclosure type	H height	W width	D depth	mtg. height	MW mtg. width	Weight
OS400_	1	44.0	22.0	11.0	37.5	22.5	150
	3R	44.0	22.0	11.0	37.5	22.5	150
	4	44.0	22.0	11.0	37.5	22.5	150
	4X SS	44.0	22.0	11.0	37.5	22.5	150
	4X Plastic	①	①	①	①	①	①
	12	44.0	22.0	11.0	37.5	22.5	150
OS600_	1	42.0	36.0	12.0	43.5	34.5	150
	3R	42.0	36.0	12.0	43.5	34.5	150
	4	42.0	36.0	12.0	43.5	34.5	150
	4X SS	42.0	36.0	12.0	43.5	34.5	150
	4X Plastic	①	①	①	①	①	①
	12	42.0	36.0	12.0	43.5	34.5	150
OS800_	1	48.0	24.0	12.0	49.5	22.5	170
	3R	48.0	24.0	12.0	49.5	22.5	170
	4	48.0	24.0	12.0	49.5	22.5	170
	4X SS	48.0	24.0	12.0	49.5	22.5	170
	4X Plastic	①	①	①	①	①	①
	12	48.0	24.0	12.0	49.5	22.5	170
OS1200_	1	60.0	36.0	12.8	62	38	200
	3R	60.0	36.0	12.8	62	38	200
	4	60.0	36.0	12.8	62	38	200
	4X SS	60.0	36.0	12.8	62	38	200
	4X Plastic	①	①	①	①	①	①
	12	60.0	36.0	12.8	62	38	200

① Please consult factory, enclosures are sized to suit specific customer needs.
② Some 4-pole switches require larger enclosures. Please consult factory.

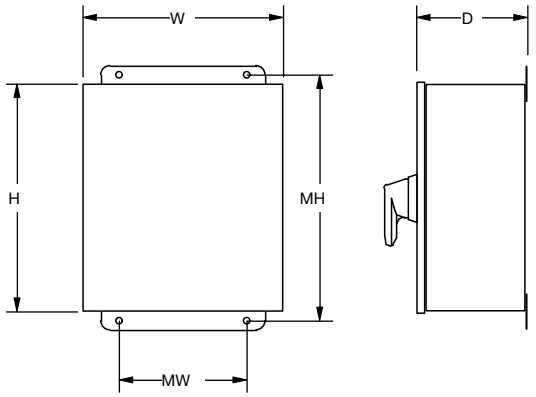

Approximate dimensions
2, 3 & 4 Pole ③
16A – 3150A, Non-fusible

00.00
00.00
Inches
[Millimeters]

Non-Fusible

Frame size	Enclosure type	H height	W width	D depth	MH mtg. height	MW mtg. width	Weight
OT16_ OT25_ OT40_	1	6.0	6.0	4.0	4.0	4.0	4.0
	3R	6.0	6.0	4.0	7.75	3.0	4.0
	4	6.0	6.0	4.0	6.75	4.0	4.0
	4X SS	6.0	6.0	4.0	7.75	3.0	4.0
	4X Plastic	6.0	6.0	5.9	6.75	4.0	4.0
	12	6.0	6.0	4.0	7.75	3.0	4.0
OT63_ OT80_	1	8.0	6.0	4.0	7.0	5.0	6.0
	3R	8.0	6.0	4.0	8.75	4.0	6.0
	4	8.0	6.0	4.0	8.75	4.0	6.0
	4X SS	8.0	6.0	4.0	8.75	4.0	6.0
	4X Plastic	8.0	6.0	5.9	8.75	4.0	6.0
	12	8.0	6.0	4.0	8.75	4.0	6.0
OT30 OT60 OT100	1	10.0	8.0	5.0	7.0	7.0	9.0
	3R	10.0	8.0	5.0	10.75	6.0	9.0
	4	10.0	8.0	5.0	10.75	6.0	9.0
	4X SS	10.0	8.0	5.0	10.75	6.0	9.0
	4X Plastic	10.0	8.0	5.9	10.75	6.0	9.0
	12	10.0	8.0	5.0	10.75	6.0	9.0

Frame size	Enclosure type	H height	W width	D depth	mtg. height	MW mtg. width	Weight
OT200	1	24.0	16.0	8.0	25.5	14.5	50
	3R	24.0	16.0	8.0	25.5	14.5	50
	4	24.0	16.0	8.0	25.5	14.5	50
	4X SS	24.0	16.0	8.0	25.5	14.5	50
	4X Plastic	25.0	17.0	10.0	25.5	14.5	40
	12	24.0	16.0	8.0	25.5	14.5	50
OT400	1	44.0	22.0	11.0	37.5	22.5	120
	3R	44.0	22.0	11.0	37.5	22.5	120
	4	①	①	①	①	①	①
	4X SS	36.0	24.0	12.0	37.5	22.5	130
	4X Plastic	①	①	①	①	①	①
	12	36.0	24.0	8.0	37.5	22.5	120
OT600	1	44.0	22.0	11.0	37.5	22.5	120
	3R	36.0	24.0	12.0	37.5	22.5	120
	4	36.0	24.0	12.0	37.5	22.5	120
	4X SS	36.0	24.0	12.0	37.5	22.5	120
	4X Plastic	40.0	32.0	13.0	41.2	30.2	120
	12	36.0	24.0	12.0	37.5	22.5	120
OT800 - OT1200	1	60.0	36.0	12.0	61.5	34.5	200
	3R	60.0	36.0	12.0	61.5	34.5	200
	4	60.0	36.0	12.0	61.5	34.5	200
	4X SS	60.0	36.0	12.0	61.5	34.5	200
	4X Plastic	①	①	①	①	①	①
	12	60.0	36.0	12.0	61.5	34.5	200
OETL-NF1600 OETL-NF2000 OETL-NF3150	1	90.0	36.0	24.0	②	②	600
	3R	90.0	36.0	24.0	②	②	600
	4	①	①	①	①	①	①
	4X SS	①	①	①	①	①	①
	4X Plastic	①	①	①	①	①	①
	12	90.0	36.0	24.0	②	②	600

① Please consult factory, enclosures are sized to suit specific customer needs.
② Enclosure is free standing.
③ Some 4-pole switches require larger enclosures. Please consult factory.

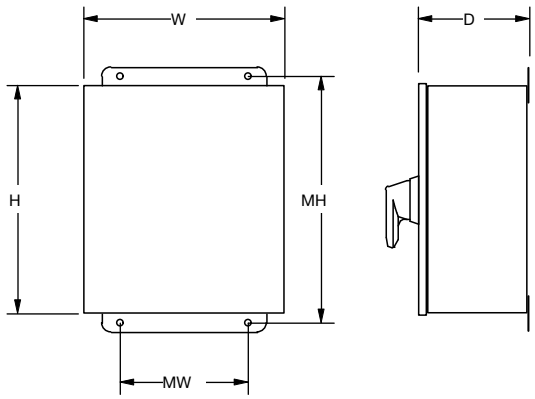

600V, 16A - 3150A
2, 3 and 4-pole switches
Enclosure dimensions

eOT Enclosed switches
Approximate dimensions
eOT16_ - eOT45U

00.00 Inches
00.00 [Millimeters]

eOT16_, eOT32_ (enclosure size 1)

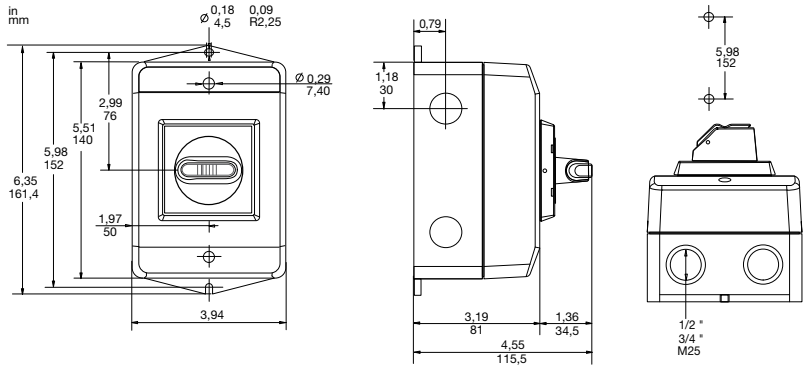

eOT45U_ (enclosure size 2 with selector handle)

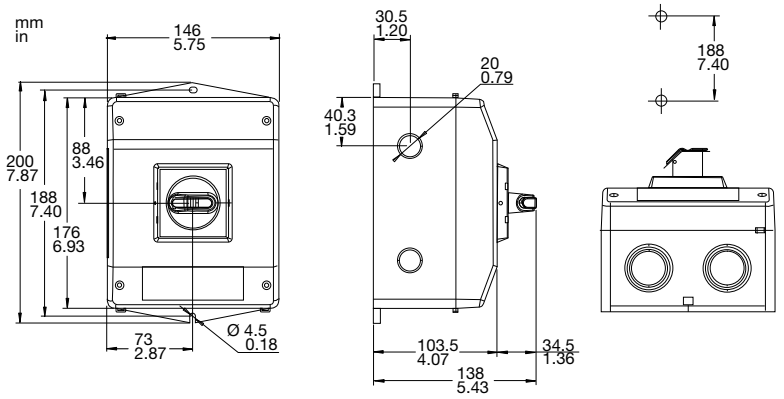

eOT45U_ (enclosure size 2 with pistol grip handle)

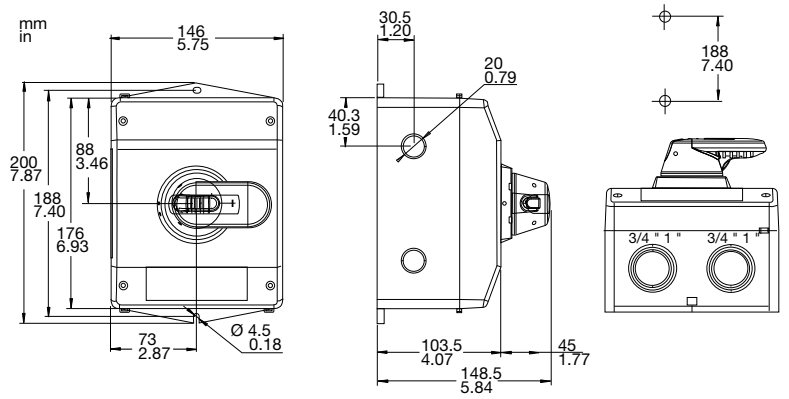

eOT Enclosed manual motor controllers
Approximate dimensions
eOT63_

00.00
00.00
Inches
[Millimeters]
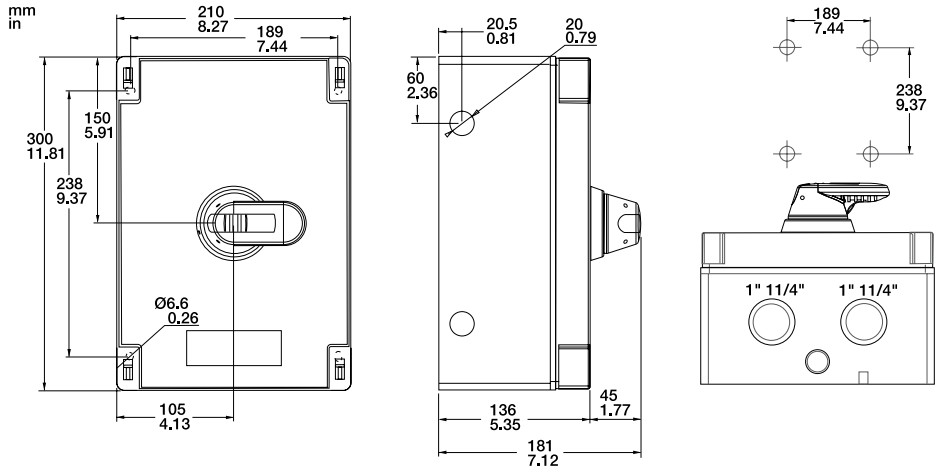
eOT63_ (enclosure size 3 with pistol grip handle)