Sealed fittings

Straight & 90° Elbow threaded fittings (Metric versions)

Threaded fittings (Metric versions)
Straight and 90° Elbow compression type fittings incorporating fixed or swivel male threads to provide connection to knockouts and threaded entries. These fittings are designed for use with all types of unslit Harnessflex conduit, maintaining maximum conduit bore.

Threaded fittings (Metric versions)

	Conduit size							
Metric thread	**NC**	**NW**	**US**	**Straight**	**90° Elbow**	**Seal**	**Capnut**	**Configuration**
M16	08	7.5	¼	AB12-M16	–	RSB12-08	CN09-08	B
				AB16-M16	AB16-M16-90	RSB16-08	CN11-08	B
	10	8.5	5/16	AB12-M16	–	SRN07	CN07	A
	12	10	5/16	AB12-M16	–	SRN09	CN09	A
				AB16-M16	AB16-M16-90	RSB16-12	CN11-12	B
	16	12	⅜	AB16-M16	AB16-M16-90	SRN11	CN11	A
M20	08	7.5	¼	AB12-M20	–	RSB12-08	CN09-08	B
				AB16-M20	AB16-M20-90	RSB16-08	CN11-08	B
				AB20-M20	AB20-M20-90	RSB20-08	CN16-08	B
	10	8.5	5/16	AB12-M20	–	SRN07	CN07	A
	12	10	5/16	AB12-M20	–	SRN09	CN09	A
				AB16-M20	AB16-M20-90	RSB16-12	CN11-12	B
				AB20-M20	AB20-M20-90	RSB20-12	CN16-12	B
	16	12	⅜	AB16-M20	AB16-M20-90	SRN11	CN11	A
				AB20-M20	AB20-M20-90	RSB20-16	CN16-16-HF	B
	20	17	½	AB20-M20	AB20-M20-90	SRN16	CN16	A
M25	12	10	5/16	AB25-M25	AB25-M25-90	RSB28-12	CN21-12	B
	16	12	⅜	AB25-M25	AB25-M25-90	RSB28-16	CN21-16	B
	20	17	½	AB25-M25	AB25-M25-90	RSB28-20	CN21-20	B
	25	22	¾	AB25-M25	AB25-M25-90	SRN21	CN21	A
	28	23	¾	AB25-M25	AB25-M25-90	SRN28	CN28-HF	A
M32	20	17	½	AB32-M32	AB32-M32-90	RSB32-20	CN32-20	B
	25	22	¾	AB32-M32	AB32-M32-90	RSB32-25	CN32-25	B
	28	23	¾	AB32-M32	AB32-M32-90	RSB32-28	CN32-28	B
	32	29	1	AB32-M32	AB32-M32-90	SRN29	CN32	A
M40	40	36	1 ¼	AB40-M40	AB40-M40-90	SRN36	CN36-HF	A
M50	50	48	1 ½	AB50-M50	AB50-M50-90	SRN48	CN47	A

NOTE: Order fitting bodies, cap nuts, sealing bushes separately.

Configuration diagram

Sealed fittings

Straight & 90° Elbow threaded fittings (PG versions)

Threaded fittings (PG versions)

Straight and 90° Elbow compression type fittings incorporating fixed or swivel male threads to provide connection to knockouts and threaded entries. These fittings are designed for use with all types of unslit Harnessflex conduit, maintaining maximum conduit bore.

Threaded fittings (PG versions)

	Conduit size							
PG thread	**NC**	**NW**	**US**	**Straight**	**90° Elbow**	**Seal**	**Capnut**	**Configuration**
PG09	08	7.5	¼	AB12-PG09	AB12-PG09-90	RSB12-08	CN09-08	B
				AB16-PG09	–	RSB16-08	CN11-08	B
	10	8.5	5/16	AB12-PG09	AB12-PG09-90	SRN07	CN07	A
	12	10	5/16	AB12-PG09	AB12-PG09-90	SRN09	CN09	A
				AB16-PG09	–	RSB16-12	CN11-12	B
	16	12	⅜	AB16-PG09	–	SRN11	CN11	A
PG11	08	7.5	¼	AB12-PG11	–	RSB12-08	CN09-08	B
				AB16-PG11	AB16-PG11-90	RSB16-08	CN11-08	B
	10	8.5	5/16	AB12-PG11	–	SRN07	CN07	A
	12	10	5/16	AB12-PG11	–	SRN09	CN09	A
				AB16-PG11	AB16-PG11-90	RSB16-12	CN11-12	B
	16	12	⅜	AB16-PG11	AB16-PG11-90	SRN11	CN11	A
PG13	08	7.5	¼	AB12-PG13	–	RSB12-08	CN09-08	B
				AB16-PG13	–	RSB16-08	CN11-08	B
	10	8.5	5/16	AB12-PG13	–	SRN07	CN07	A
	12	10	5/16	AB12-PG13	–	SRN09	CN09	A
				AB16-PG13	–	RSB16-12	CN11-12	B
	16	12	⅜	AB16-PG13	–	SRN11	CN11	A
PG16	08	7.5	¼	AB20-PG16	AB20-PG16-90	RSB20-08	CN16-08	B
	12	10	5/16	AB20-PG16	AB20-PG16-90	RSB20-12	CN16-12	B
	16	12	⅜	AB20-PG16	AB20-PG16-90	RSB20-16	CN16-16-HF	B
	20	17	½	AB20-PG16	AB20-PG16-90	SRN16	CN16	A
PG21	12	10	5/16	AB25-PG21	AB25-PG21-90	RSB28-12	CN21-12	B
	16	12	⅜	AB25-PG21	AB25-PG21-90	RSB28-16	CN21-16	B
	20	17	½	AB25-PG21	AB25-PG21-90	RSB28-20	CN21-20	B
	25	22	¾	AB25-PG21	AB25-PG21-90	SRN21	CN21	A
	28	23	¾	AB25-PG21	AB25-PG21-90	SRN28	CN28-HF	A
PG29	20	17	½	AB32-PG29	AB32-PG29-90	RSB32-20	CN32-20	B
	25	22	¾	AB32-PG29	AB32-PG29-90	RSB32-25	CN32-25	B
	28	23	¾	AB32-PG29	AB32-PG29-90	RSB32-28	CN32-28	B
	32	29	1	AB32-PG29	AB32-PG29-90	SRN29	CN32	A
PG36	40	36	1 ¼	AB40-PG36	–	SRN36	CN36-HF	A
PG48	50	48	1 ½	AB50-PG48	–	SRN48	CN47	A

NOTE: Order fitting bodies, cap nuts, sealing bushes separately.

Configuration diagram

Sealed fittings

90° Flange

90° Flange

90° Flange

90° elbow compression type fitting providing a 4 hole panel mounting facility. These fittings are designed for use with all types of unslit Harnessflex conduit, maintaining maximum conduit bore.

90° Flange Part No.	Conduit Size NC	NW	US	Seal	Capnut	Configuration
AB32-F90	20	20	½	RSB32-20	CN32-20	B
	25	25	¾	RSB32-25	CN32-25	B
	28	28	¾	RSB32-28	CN32-28	B
	32	32	1	SRN29	CN32	A
AB40-F90	40	40	1 ¼	SRN36	CN36-HF	A
AB50-F90	50	50	1 ½	SRN48	CN47	A

NOTE: Order flange bodies, cap nuts and sealing bushes separately.

Flange body

Flange body Part No.	Nominal dimensions (mm) A	B	C	D	E	F	G	H	I	J
AB32-F90	66.0	54.0	46.0	36.0	95.0	36.0	17.0	63.0	53.0	27.0
AB40-F90	86.0	73.0	63.0	46.0	115.0	30.0	27.0	77.0	64.0	35.0
AB50-F90	86.0	73.0	73.0	59.0	125.0	30.0	30.0	86.0	77.0	35.0

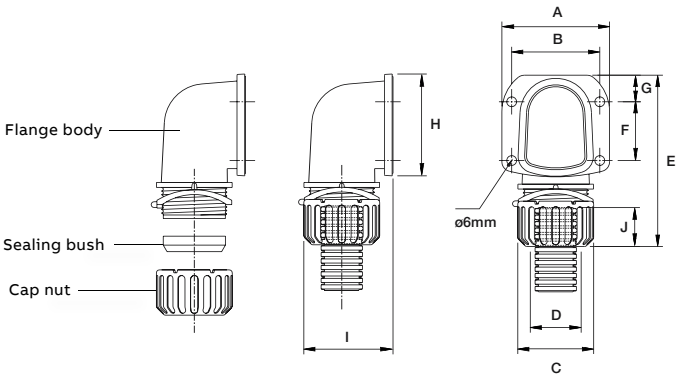

NOTE: Dimensions refer to overall assembly.

Configuration diagram

A	BODY	SRN SEAL	CAP NUT
B		RSB SEAL	CAP NUT