ABB ACS150 micro drives

Achieve high performance with maximum versatility in your application

ABB micro drives
Take performance to the next level with the wide power range and functionality of the ACS150. The ACS150 variable frequency drive has an extensive list of programmable drive parameters that are used to achieve high performance with maximum versatility in many applications. The drive includes a variety of predefined I/O configuration macros, including ABB standard, 3-wire control, digital input control, PID control, hand/auto control and a PLC interface, for easy setup and commissioning. User defined macros can also be created.

ACS150 micro drives are compact with multiple mounting positions and options. The drive features an integrated control panel with LCD display and built-in speed potentiometer. Rapid programming and commissioning are possible using the onboard setup macros. The DrivePM (Drive Parameter Manager) software tool can be used to create, edit, and copy parameter sets using the MFDT-01 FlashDrop tool.
ACS150 micro drives are designed to be incorporated into a wide variety of machines, such as mixers, conveyors, fans, pumps, or anywhere a motor needs to run at variable speed. The ACS150 is ideal for panel builders and OEMs needing an easy-to-commission, cost-effective micro drive with flexible mounting options.

Highlights
- Single and three phase input available
- 150% peak overload capacity
- Common height and depth across the product line, for flexible installation
- Easy access to power and I/O connections for rapid installation
- Options for input reactors, output filters and braking resistors
- UL listing includes use of ABB manual motor protectors for branch circuit protection instead of fuses
- NEMA 1 kits for standalone installation

Feature	Advantage	Benefit
Worldwide availability and service	Drives are available worldwide and permanently stocked in four regions. Dedicated global service and support provided by a network that is one of the widest in the industry.	Fast and reliable delivery with dedicated support to any country in the world.
User-friendly LCD control panel and integrated potentiometer	Clear alphanumeric display. Easy setup and use.	Time savings due to quick setup and simple configuration.
Flexible mounting alternatives	Wall or DIN rail mounting, sideways or side-by-side.	One drive type can be used in various designs, saving installation costs and time.
Integrated EMC filter	High electromagnetic compatibility.	Low EMC emissions in selected environments.
Built-in brake chopper as standard	No need for an external brake chopper.	Space savings, reduced installation cost.
FlashDrop tool	Faster and easier drive setup and commissioning for volume manufacturing and maintenance. The FlashDrop tool enables both downloading and uploading drive parameters.	Fast, safe and trouble-free parameter setting without the need to power-up the drive.
PID control	Varies the drive's performance according to the need of the application.	Enhances production output, stability and accuracy.
Coated boards	Board coating protects the electronics from hazards including static discharge and airborne contaminates, including moisture.	High reliability enables reduced maintenance the electronic components are protected.

Applications

In mixing applications the drive provides high starting torque which benefits the start of the mixing operation. The silent operation mode adjusts the switching frequency of the drive to a higher level after the high-torque start, resulting in lower audible noise. The FlashDrop tool provides a quick and safe way to configure multiple drives for identical mixer applications.

In conveyors the belt speed can be controlled using a drive and a motor. Production lines often have multiple stages, including conveyors, which need to be efficiently linked with each other to provide high production output. A drive provides smooth start and stop of the conveyor, thereby reducing mechanical stress and lowering maintenance costs.

A heat pump system consists of an indoor unit with fan and an outdoor unit with a compressor and a blower. The outdoor unit uses the compressor and the blower to dissipate the heat. The cooled air is blown indoors by fans located in the indoor unit. Drive allows the user to variably control the cooling power based on customer request. AC drives optimizes systems' energy efficiency and smooths system operation.

Fans are used for process cooling and ventilation in industrial, commercial and domestic environments. Using a drive to control air flow enables energy savings compared to mechanical flow control methods. An ABB drive has integrated PID control which provides optimal air flow by adjusting the fan speed based on a given reference value.

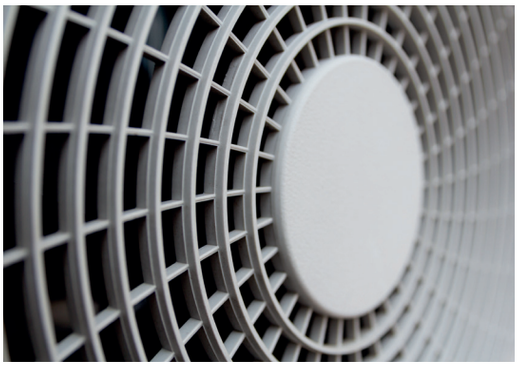

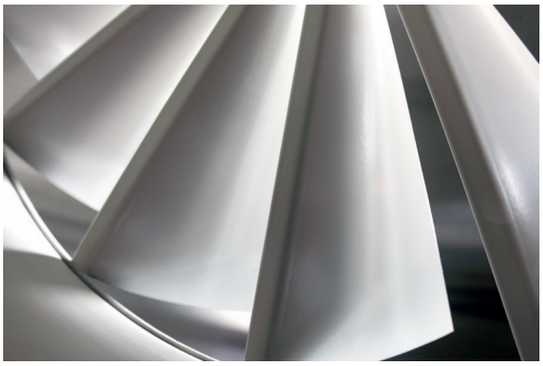

Ratings, types and dimensions

Type designation
In column 4 on the right is the unique reference number that clearly identifies your drive by power rating and frame size. Once you have selected the type designation, the frame size (column 5) can be used to determine the drives dimensions, shown below.

Voltages
ACS150 is available in two voltage ranges:
2 = 200 to 240 V
4 = 380 to 480 V
Insert either “2” or “4”, depending on your chosen voltage, into the type designation shown on the page 7.

Construction
“01X” and “03X” within the type designation varies depending on the drive phase and EMC filtering. Choose below the one you need.
01 = 1-phase
03 = 3-phase
E = EMC filter connected, 50 Hz frequency
The European variant of the ACS150 will have an "E" in the type code indicating the EMC filter is connected with a metal grounding screw in the EMC port
U = EMC filter disconnected, 60 Hz frequency
The standard configuration of the ACS150 for drives stocked in the U.S. will have a "U" in the type code, indicating there is a nylon screw in the "EMC" port to disconnect the filter. A metal screw is provided in the parts bag to replace the nylon screw and connect the EMC filter.

Ratings				
P_N hp	P_N kW	I_{2N} A	Type designation	Frame size
1-phase AC supply, 200 to 240 V				
0.5	0.37	2.4	ACS150-01U-02A4-2	R0
1	0.75	4.7	ACS150-01U-04A7-2	R1
1.5	1.1	6.7	ACS150-01U-06A7-2	R1
2	1.5	7.5	ACS150-01U-07A5-2	R2
3	2.2	9.8	ACS150-01U-09A8-2	R2
3-phase AC supply, 200 to 240 V				
0.5	0.37	2.4	ACS150-03U-02A4-2	R0
0.75	0.55	3.5	ACS150-03U-03A5-2	R0
1	0.75	4.7	ACS150-03U-04A7-2	R1
1.5	1.1	6.7	ACS150-03U-06A7-2	R1
2	1.5	7.5	ACS150-03U-07A5-2	R1
3	2.2	9.8	ACS150-03U-09A8-2	R2
3-phase AC supply, 380 to 480 V				
0.5	0.37	1.2	ACS150-03U-01A2-4	R0
0.75	0.55	1.9	ACS150-03U-01A9-4	R0
1	0.75	2.4	ACS150-03U-02A4-4	R1
1.5	1.1	3.3	ACS150-03U-03A3-4	R1
2	1.5	4.1	ACS150-03U-04A1-4	R1
3	2.2	5.6	ACS150-03U-05A6-4	R1
5	4	8.8	ACS150-03U-08A8-4	R1

Cabinet-mounted drives (UL open)						
	IP20 UL open					
Frame size	H1 mm	H2 mm	H3 mm	W mm	D mm	Weight kg
R0	169	202	239	70	142	1.1
R1	169	202	239	70	142	1.3
R2	169	202	239	105	142	1.5

H1 = Height without fastenings and clamping plate.
H2 = Height with fastenings but without clamping plate.
H3 = Height with fastenings and clamping plate.
W = Width
D = Depth

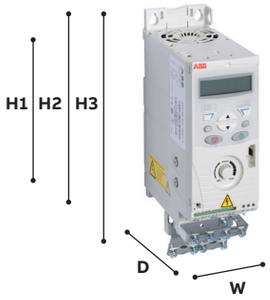

Wall-mounted drives (NEMA 1)					
	NEMA 1				
Frame size	H4 mm	H5 mm	W mm	D mm	Weight kg
R0	257	280	70	142	1.5
R1	257	280	70	142	1.7
R2	257	282	105	142	1.9

H4 = Height with fastenings and NEMA 1 connection box.
H5 = Height with fastenings, NEMA 1 connection box and hood.
W = Width
D = Depth

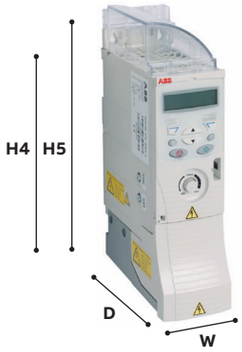

Technical data

Mains connection	
Voltage and power range	1-phase, 200 to 240 V ± 10% 0.5 to 3 hp (0.37 to 2.2 kW) 3-phase, 200 to 240 V ± 10% 0.5 to 3 hp (0.37 to 2.2 kW) 3-phase, 380 to 480 V ± 10% 0.5 to 5 hp (0.37 to 4 kW)
Frequency	48 to 63 Hz
Motor connection	
Voltage	3-phase, from 0 to U_{supply}
Frequency	0 to 500 Hz
Continuous loading capability (constant torque at a max. ambient temperature of 40 °C)	Rated output current I_{2N}
Overload capability (at a max. ambient temperature of 40 °C)	At heavy duty use 1.5 x I_{2N} for 1 minute every 10 minutes At start 1.8 x I_{2N} for 2 s
Switching frequency Default Selectable	 4 kHz 4 to 16 kHz with 4 kHz steps
Acceleration time	0.1 to 1800 s
Deceleration time	0.1 to 1800 s
Braking	Built-in brake chopper as standard
Motor control method	Scalar U/f
Environmental limits	
Ambient temperature	-10 to 40 °C (14 to 104 °F), no frost allowed, 50 °C (122 °F) with 10% derating
Altitude Output current	 Rated current available at 0 to 1000 m (0 to 3281 ft) reduced by 1% per 100 m (328 ft) over 1000 to 2000 m (3281 to 6562 ft)
Relative humidity	Lower than 95% (without condensation)
Degree of protection	IP20/Optional NEMA 1 enclosure
Enclosure color	NCS 1502-Y, RAL 9002, PMS 420 C
Contamination levels Transportation Storage Operation	IEC 721-3-3 No conductive dust allowed Class 1C2 (chemical gases) Class 1S2 (solid particles) Class 2C2 (chemical gases) Class 2S2 (solid particles) Class 3C2 (chemical gases) Class 3S2 (solid particles)

Power conditioning	
AC input reactors	External option. For reducing THD in partial loads and to comply with EN 61000-3-2.
Dv/dt output filters	External option. To achieve longer motor cables.
Programmable control connections	
One analog input Voltage signal Current signal Potentiometer reference value Resolution Accuracy	 0 (2) to 10 V, R_{in} > 312 kΩ 0 (4) to 20 mA, R_{in} = 100 Ω 10 V ± 1% max. 10 mA, R < 10 kΩ 0.1% ± 2%
Auxiliary voltage	24 V DC ± 10%, max. 200 mA
Five digital inputs	12 to 24 V DC with internal or external supply, PNP and NPN, pulse train 0 to 16 kHz
Input impedance	2.4 kΩ
One relay output Type Maximum switching voltage Maximum switching current Maximum continuous current	 NO + NC 250 V AC/30 V DC 0.5 A/30 V DC; 5 A/230 V AC 2 2 A rms
Product compliance	
Low voltage Directive 2006/95/EC with supplements Machinery Directive 2006/42/EC EMC Directive 2004/108/EC with supplements Quality assurance system ISO 9001 Environmental system ISO 14001 UL, cUL, CE, RCM and EAC approvals RoHS compliant	

Control connections and interfaces

Application macros
Application macros are preprogrammed parameter sets. When starting up the drive, the user typically selects one of the macros that is best suited for the application. The diagram below gives an overview of ACS150 control connections and shows the default I/O connections for the ABB standard macro.

ABB micro drives have six standard macros:
- ABB standard macro
- 3-wire macro
- Alternate macro
- Motor potentiometer macro
- Hand/auto macro
- PID control macro

In addition to the standard macros the user can create three user macros. The user macro allows the user to save the parameter settings for later use.

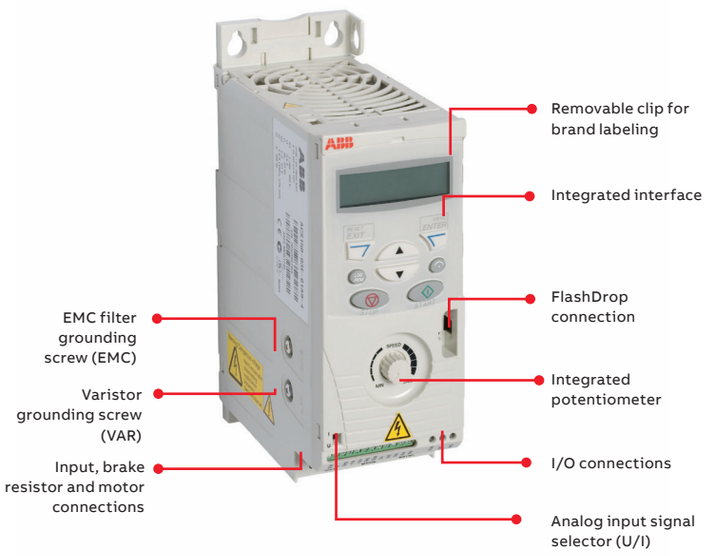

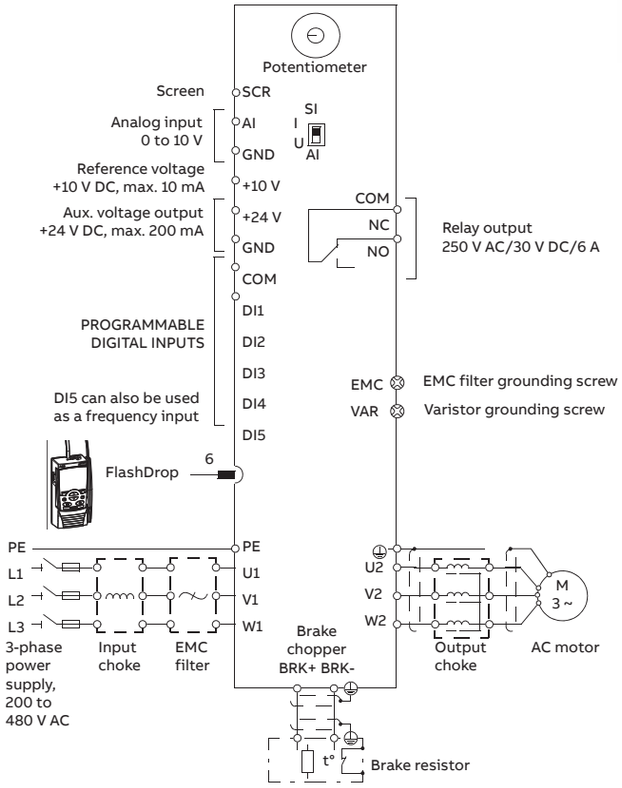

Typical I/O connections

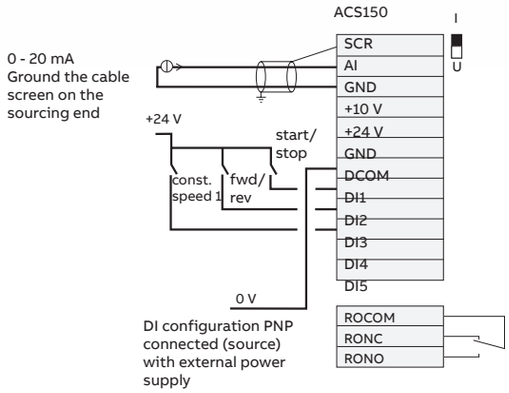

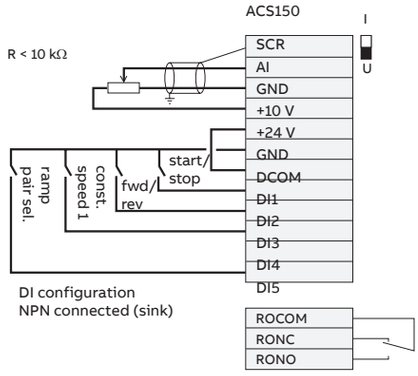

Cooling

Cooling
ACS150 is fitted with cooling fans as standard. The cooling air must be free from corrosive substances and must not be above the maximum ambient temperature of 40 °C (50 °C with derating). For more specific limits see the Technical data - Environmental limits in this catalog.

Cooling air flow

		Heat dissipation		Air flow	
Type designation	**Frame size**	**[W]**	**BTU/hr**	**m^3/h**	**ft^3/min**
1-phase, 200 to 240 V					
ACS150-01U-02A4-2	R0	25	85	-*)	-*)
ACS150-01U-04A7-2	R1	46	157	24	14
ACS150-01U-06A7-2	R1	71	242	24	14
ACS150-01U-07A5-2	R2	73	249	21	12
ACS150-01U-09A8-2	R2	96	328	21	12
3-phase, 200 to 240 V					
ACS150-03U-02A4-2	R0	19	65	-*)	-*)
ACS150-03U-03A5-2	R0	31	106	-*)	-*)
ACS150-03U-04A7-2	R1	38	130	24	14
ACS150-03U-06A7-2	R1	60	205	24	14
ACS150-03U-07A5-2	R1	62	212	21	12
ACS150-03U-09A8-2	R2	83	283	21	12
3-phase, 380 to 480 V					
ACS150-03U-01A2-4	R0	11	38	-*)	-*)
ACS150-03U-01A9-4	R0	16	55	-*)	-*)
ACS150-03U-02A4-4	R1	21	72	13	8
ACS150-03U-03A3-4	R1	31	106	13	8
ACS150-03U-04A1-4	R1	40	137	13	8
ACS150-03U-05A6-4	R1	61	208	19	11
ACS150-03U-07A3-4	R1	74	253	24	14
ACS150-03U-08A8-4	R1	94	321	24	14

*) Frame size R0 with free convection cooling.

Free space requirements

Enclosure type	Space above mm	Space below mm	Space on left/right mm
All frame sizes	75	75	0

Fuses and circuit protection

Fuses or manual motor protectors for circuit protection
Standard fuses or manual motor protectors can be used with ACS150 drives for branch circuit protection.
Use the following table for selecting the correct fuse or protector for each drive.

Manual motor protectors
ABB UL file E211945 Volume 1, Section 4 lists the ABB Type E manual motor protectors MS132 & S1-M3-25, MS165, MS495 as an alternate to UL classified fuses as a means of branch circuit protection. This is in accordance with the National Electrical Code (NEC).

When the correct ABB Type E manual motor protector is selected from the table and used for branch circuit protection the drive is suitable for use in a circuit capable of delivering not more than 65 kA RMS symmetrical amperes at the drive maximum rated voltage.

Drives with and without NEMA 1 enclosure kits are included in the UL file. The MMP selections in the table are also valid for drives having a NEMA 1 enclosure kit installed.

Type code	Frame	IEC fuses	UL fuses	Manual motor protectors		
		Fuse type gG* [A]	UL class T or CC (600V) [A]	MMP Type E[1,2]	MMP trip current setting [A]	Minimum Enclosure Vol.[5] [cu in]
1 Phase 200 to 240 V						
ACS150-01U-02A4-2	R0	10	10	MS132-6.3 & S1-M3-253	6.1	1152
ACS150-01U-04A7-2	R1	16	20	MS165-16	11.4	1152
ACS150-01U-06A7-2	R1	20	25	MS165-20	16.1	1152
ACS150-01U-07A5-2	R2	25	30	MS165-20	16.8	-
ACS150-01U-09A8-2	R2	35	35	MS165-25	21	-
3 Phase 200 to 240 V						
ACS150-03U-02A4-2	R0	10	10	MS132-6.3 & S1-M3-25[3]	4.3	1152
ACS150-03U-03A5-2	R0	10	10	MS132-6.3 & S1-M3-25[3]	6.1	1152
ACS150-03U-04A7-2	R1	10	15	MS132-10 & S1-M3-25[3]	7.6	1152
ACS150-03U-06A7-2	R1	16	15	MS165-16	11.8	1152
ACS150-03U-07A5-2	R1	16	15	MS165-16	12.0	1152
ACS150-03U-09A8-2	R2	16	20	MS165-16	14.3	-
3 Phase 440, 460, 480 V [4]						
ACS150-03U-01A2-4	R0	10	10	MS132-2.5 & S1-M3-25	1.8	1152
ACS150-03U-01A9-4	R0	10	10	MS132-4.0 & S1-M3-25	3.0	1152
ACS150-03U-02A4-4	R1	10	10	MS132-4.0 & S1-M3-25	3.4	1152
ACS150-03U-03A3-4	R1	10	10	MS132-6.3 & S1-M3-25	5.0	1152
ACS150-03U-04A1-4	R1	16	15	MS132-6.3 & S1-M3-25	5.8	1152
ACS150-03U-05A6-4	R1	16	15	MS132-10 & S1-M3-25	8.0	1152
ACS150-03U-07A3-4	R1	16	20	MS132-10 & S1-M3-25	9.7	1152
ACS150-03U-08A8-4	R1	20	25	MS165-16	11.3	1152

*According to the IEC-60269 standard
[1] All manual motor protectors listed are Type E self-protected up to 65kA. See ABB publication 2CDC131085M0201 - Manual Motor Starters - North American Applications for complete technical data on ABB Type E manual motor protectors.
[2] Manual motor protectors may require adjusting the trip limit from the factory setting at or above the drive input Amps to avoid nuisance tripping. If the manual motor protector is set to the maximum current trip level and nuisance tripping is occurring, then select the next size MMP. (MS132-10 is the highest size in MS132 frame size to meet Type E at 65kA; the next size up is the MS165-16.
[3] Requires use of the S1-M3-25 line side feeder terminal with the manual motor protector to meet Type E self-protection class.
[4] 480Y/277V delta systems only: Short-circuit protective devices with slash voltage ratings (e.g. 480Y/277 VAC) can be applies only in solidly grounded networks where the voltage from line-to-ground does not exceed the lower of the two ratings (e.g. 277 V AC), and the voltage from line-to-line does not exceed the higher of the two ratings (e.g. 480 V AC). The lower rating represents the device's interrupting capability per pole.
[5] Minimum enclosure volume is specified in the UL listing for R0 & R1 frame drives when applied with the ABB Type E MMP shown in the table. ACS150 drives are intended to be mounted in an enclosure unless a NEMA 1 kit is added.
For all drives, the enclosure must be sized to accommodate the specific thermal considerations of the application as well as provide free space for cooling.
See the applicable ABB User Manual for free space requirements.

To obtain the most current product documentation go to www.abb.com and select Offerings/Low Voltage AC Drives to navigate to the complete User Manual for the appropriate drive.

Input reactors

A separate order line and type designation is required for any of these external options.

Input reactors

- Using an input reactor increases uptime, improves power factor, and increases drive lifetime by reducing heat. Drives are vulnerable to electrical distortion on the line. The addition of a KDR Reactor will reduce harmonic content, which reduces the total RMS current, thereby improving the total power factor. In most cases, the use of an external input reactor is recommended for use with an AC drive. Advantages of using an input reactor include:
- Reduction of nuisance tripping caused by:
  - Transient voltages caused by capacitor switching
  - Line notching
  - DC bus overvoltage tripping
  - Inverter overcurrent and overvoltage
  - Reduced nuisance tripping
- Additional benefits include:
  - Lowering injected percentage of harmonic current
  - Improving true power factor
  - Reducing cross-talk between drives
  - Adding impedance to drives with DC link chokes/reactors when more impedance is desired due to a relatively stiff source

Features

Open, UL Type 1 and UL Type 3R construction - all are UL Listed.

Cable lugs are provided with the reactor or as a separate kit as noted in the tables.

Single phase 200-240V applications				
Drive Part # ACS150-01U-	**HP ND**	**Input current @ 200V**	**Input current @ 200V with 5% choke**	**Output Current I_{2N}**
02A4-2	**0.5**	**6.1**	**4.5**	2.4
04A7-2	**1**	**11**	**8.1**	4.7
06A7-2	**1.5**	**16**	**11**	6.7
07A5-2	**2**	**17**	**12**	7.5
09A8-2	**3**	**21**	**15**	9.8
Three phase 200-240V applications				
Drive Part # ACS150-03U-	**HP ND**	**Drive Input Current @ 200V**	**Drive Input current @ 200V with 5% choke**	
02A4-2	**0.5**	**4.3**	**2.2**	2.4
03A5-2	**0.75**	**6.1**	**3.5**	3.5
04A7-2	**1**	**7.6**	**4.2**	4.7
06A7-2	**1.5**	**12**	**6.1**	6.7
07A5-2	**2**	**12**	**6.9**	7.5
09A8-2	**3**	**14**	**9.2**	9.8
Three phase 380-480V applications				
Drive Part # ACS150-03U-	**HP ND**	**Drive Input Current @ 480V**	**Drive Input current @ 480V with 5% choke**	
01A2-4	**0.5**	**1.8**	**0.9**	1.2
01A9-4	**0.75**	**3.0**	**1.5**	1.9
02A4-4	**1**	**3.4**	**1.9**	2.4
03A3-4	**1.5**	**5.0**	**2.6**	3.3
04A1-4	**2**	**5.8**	**2.9**	4.1
05A6-4	**3**	**8.0**	**4.0**	5.6
08A8-4	**5**	**11**	**6.4**	8.8

Input reactors

Low impedance

Input Reactors for Single Phase 200-240V applications (connect to terminals A and C)

Drive Part # ACS150-01U-	HP ND	Drive Output Current I2N	KDR 3%, UL Listed, Open				KDR 3%, UL Type 1 Enclosure				KDR 3%, UL Type 3R Enclosure			
			Part Number	Watts Loss	Dimensions (HxWxD)	Weight	Part Number	Watts Loss	Dimensions (HxWxD)	Weight	Part Number	Watts Loss	Dimensions (HxWxD)	Weight
02A4-2	0.5	2.4	KDRMA8L1	30.6	3.63x4.45x1.78	4	KDRMA8L1E01	30.6	12.25x12.5x6.75	12	KDRMA8L1E3R1	30.6	11.5x10x12	17
04A7-2	1	4.7	KDRAA3L2	4405	4.44x4.25x2.64	3	KDRAA3L2E01	4405	12.25x12.5x6.75	14	KDRAA3L2E3R1	4405	11.5x10x12	18
06A7-2	1.5	6.7	KDRAA4L2	62.9	4.44 x 4.25 x 2.64	4	KDRAA4L2E01	62.9	12.25x12.5x6.75	14	KDRAA4L2E3R1	62.9	11.5x10x12	18
07A5-2	2	7.5	KDRB22L	38	5.00 x 6.00 x 4.00	8	KDRB22LE01	38	12.25x12.5x6.75	18.5	KDRB22LE3R	38	11.5x10x12	23
09A8-2	3	9.8	KDRB22L	38	5.00 x 6.00 x 4.00	8	KDRB22LE01	38	12.25x12.5x6.75	18.5	KDRB22LE3R	38	11.5x10x12	23

Input Reactors for Three Phase 200-240V applications

Drive Part # ACS150-03U-	HP ND	Drive Output Current I2N	KDR 3%, UL Listed, Open				KDR 3%, UL Type 1 Enclosure				KDR 3%, UL Type 3R Enclosure			
			Part Number	Watts Loss	Dimensions (HxWxD)	Weight	Part Number	Watts Loss	Dimensions (HxWxD)	Weight	Part Number	Watts Loss	Dimensions (HxWxD)	Weight
02A4-2	0.5	2.4	KDRMA8L1	30.6	3.63x4.45x1.78	4	KDRMA8L1E01	30.6	12.25x12.5x6.75	12	KDRMA8L1E3R1	30.6	11.5x10x12	17
03A5-2	0.75	3.5	KDRAA3L2	44.5	4.44x4.25x2.64	3	KDRAA3L2E01	44.5	12.25x12.5x6.75	14	KDRAA3L2E3R1	44.5	11.5x10x12	18
04A7-2	1	4.7	KDRAA4L2	62.9	4.44x4.258x2.64	4	KDRAA4L2E01	62.9	12.25x12.5x6.75	14	KDRAA4L2E3R1	62.9	11.5x10x12	19
06A7-2	1.5	6.7	KDRAA4L2	62.9	4.44x4.25x2.64	4	KDRAA4L2E01	62.9	12.25x12.5x6.75	14	KDRAA4L2E3R1	62.9	11.5x10x12	19
07A5-2	2	7.5	KDRA27L	21	4 x4.18 x3.75	4	KDRA27LE01	21	12.25x12.5x6.75	14.5	KDRA27LE3R	21	11.5x10x12	19
09A8-2	3	9.8	KDRA28L	29	4 x4.18 x3.75	4	KDRA28LE01	29	12.25x12.5x6.75	14.5	KDRA28LE3R	29	11.5x10x12	19

Input Reactors for Three Phase 380-480V applications

Drive Part # ACS150-03U-	HP ND	Drive Output Current I2N	KDR 3%, UL Listed, Open				KDR 3%, UL Type 1 Enclosure				KDR 3%, UL Type 3R Enclosure			
			Part Number	Watts Loss	Dimensions (HxWxD)	Weight	Part Number	Watts Loss	Dimensions (HxWxD)	Weight	Part Number	Watts Loss	Dimensions (HxWxD)	Weight
01A2-4	0.5	1.2	KDRMA3L1	9.7	3.63x4.45x1.78	2	KDRMA3L1E01	9.7	12.25x12.5x6.75	12	KDRMA3L1E3R1	9.7	11.5x10x12	17
01A9-4	0.75	1.9	KDRMA4L1	12.2	3.63x4.45x1.78	2	KDRMA4L1E01	12.2	12.25x12.5x6.75	12	KDRMA4L1E3R1	12.2	11.5x10x12	17
02A4-4	1	2.4	KDRMA5L1	25.2	3.63x4.45x1.78	2	KDRMA5L1E01	25.2	12.25x12.5x6.75	12	KDRMA5L1E3R1	25.2	11.5x10x12	17
03A3-4	1.5	3.3	KDRMA6L1	26.4	3.63x4.45x1.78	2	KDRMA6L1E01	26.4	12.25x12.5x6.75	12	KDRMA6L1E3R1	26.4	11.5x10x12	17
04A1-4	2	4.1	KDRMA7L1	23.5	3.63x4.45x1.78	2	KDRMA7L1E01	23.5	12.25x12.5x6.75	12	KDRMA7L1E3R1	23.5	11.5x10x12	17
05A6-4	3	5.6	KDRMA8L1	30.6	3.63x4.45x1.78	2	KDRMA8L1E01	30.6	12.25x12.5x6.75	12	KDRMA8L1E3R1	30.6	11.5x10x12	17
08A8-4	5	8.8	KDRAA3L2	48.8	4.44x4.25x2.64	3	KDRAA3L2E01	48.8	12.25x12.5x6.75	14	KDRAA3L2E3R1	48.8	11.5x10x12	18

Input reactors

High impedance

Input Reactors for Single Phase 200-240V applications (connect to terminals A and C)

Drive Part # ACS150-01U-	HP PN	Drive Output Current I2N	KDR 5%, UL Listed, Open				KDR 5%, UL Type 1 Enclosure				KDR 5%, UL Type 3R Enclosure			
			Part Number	Watts Loss	Dimensions (HxWxD)	Weight	Part Number	Watts Loss	Dimensions (HxWxD)	Weight	Part Number	Watts Loss	Dimensions (HxWxD)	Weight
02A4-2	0.5	2.4	KDRMA8L1	30.6	3.63x4.45x1.78	4	KDRMA8L1E01	30.6	12.3x12.5x6.75	14	KDRMA8L1E3R1	30.6	11.5x10x12	19
04A7-2	1	4.7	KDRAA3L2	44.5	4.44x4.25x2.64	4	KDRAA3L2E01	44.5	12.3x12.5x6.75	14	KDRAA3L2E3R1	44.5	11.5x10x12	19
06A7-2	1.5	6.7	KDRA28H	43.1	4.00x4.18x3.75	4	KDRA28HE01	43.1	12.3x12.5x6.75	14.5	KDRA28HE3R	43.1	11.5x10x12	19
07A5-2	2	7.5	KDRB25H	53.1	5.00 x 6.00 x 4.00	8	KDRB25HE01	53.1	12.3x12.5x6.75	18.5	KDRB25HE3R	53.1	11.5x10x12	23
09A8-2	3	9.8	KDRB26H	66.5	5.00 x 6.00 x 4.00	8	KDRB26HE01	66.5	12.3x12.5x6.75	18.5	KDRB26HE3R	66.5	11.5x10x12	23

Input Reactors for Three Phase 200-240V applications

Drive Part # ACS150-03U-	HP PN	Drive Output Current I2N	KDR 5%, UL Listed, Open				KDR 5%, UL Type 1 Enclosure				KDR 5%, UL Type 3R Enclosure			
			Part Number	Watts Loss	Dimensions (HxWxD)	Weight	Part Number	Watts Loss	Dimensions (HxWxD)	Weight	Part Number	Watts Loss	Dimensions (HxWxD)	Weight
02A4-2	0.5	2.4	KDRMA6L1	26.4	3.63x4.45x1.78	2	KDRMA6L1E01	26.4	12.3x12.5x6.75	13	KDRMA6L1E3R1	26.4	11.5x10x12	17
03A5-2	0.75	3.5	KDRMA8L1	30.6	3.63x4.45x1.78	4	KDRMA8L1E01	30.6	12.3x12.5x6.75	14	KDRMA8L1E3R1	30.6	11.5x10x12	19
04A7-2	1	4.7	KDRAA6L2	39.2	4.44x4.25x2.64	3	KDRAA6L2E01	39.2	12.3x12.5x6.75	13	KDRAA6L2E3R1	39.2	11.5x10x12	18
06A7-2	1.5	6.7	KDRAA3L2	44.5	4.44x4.25x2.64	3	KDRAA3L2E01	44.5	12.3x12.5x6.75	13	KDRAA3L2E3R1	44.5	11.5x10x12	18
07A5-2	2	7.5	KDRA26H	30.5	4.00x4.18x3.75	4	KDRA26HE01	30.5	12.3x12.5x6.75	14.5	KDRA26HE3R	30.6	11.5x10x12	19
09A8-2	3	9.8	KDRA28H	43.1	4.00x4.18x3.75	4	KDRA28HE01	43.1	12.25x12.5x6.75	14.5	KDRA28HE3R	43.1	11.5x10x12	19

Input Reactors for Three Phase 380-480V applications

Drive Part # ACS150-03U-	HP PN	Drive Output Current I2N	KDR 5%, UL Listed, Open				KDR 5%, UL Type 1 Enclosure				KDR 5%, UL Type 3R Enclosure			
			Part Number	Watts Loss	Dimensions (HxWxD)	Weight	Part Number	Watts Loss	Dimensions (HxWxD)	Weight	Part Number	Watts Loss	Dimensions (HxWxD)	Weight
01A2-4	0.5	1.2	KDRMA3H1	14.3	3.63x4.45x1.78	2	KDRMA3H1E01	14.3	12.3x12.5x6.75	13	KDRMA3H1E3R1	14.3	11.5x10x12	17
01A9-4	0.75	1.9	KDRMA4H1	19.3	3.63x4.45x1.78	2	KDRMA4H1E01	19.3	12.3x12.5x6.75	13	KDRMA4H1E3R1	19.3	11.5x10x12	17
02A4-4	1	2.4	KDRMA5H1	26.7	3.63x4.45x1.78	2	KDRMA5H1E01	26.7	12.3x12.5x6.75	13	KDRMA5H1E3R1	26.7	11.5x10x12	17
03A3-4	1.5	3.3	KDRMA6H1	30	3.63x4.45x1.78	2	KDRMA6H1E01	30	12.3x12.5x6.75	13	KDRMA6H1E3R1	30	11.5x10x12	17
04A1-4	2	4.1	KDRAA1H2	45	4.44x4.25x2.64	3	KDRAA1H2E01	45	12.3x12.5x6.75	14	KDRAA1H2E3R1	45	11.5x10x12	18
05A6-4	3	5.6	KDRAA2H2	41.8	4.44x4.25x2.64	3	KDRAA2H2E01	41.8	12.3x12.5x6.75	14	KDRAA2H2E3R1	41.8	11.5x10x12	18
08A8-4	5	8.8	KDRAA3H2	66	4.44x4.25x2.64	3	KDRAA3H2E01	66	12.3x12.5x6.75	14	KDRAA3H2E3R1	66	11.5x10x12	18

dv/dt Output filters

A separate order line and type designation is required for any of these external options.

dv/dt output filters
V1k Output Filters provide motor protection by limiting voltage spikes to 1,000 volts, or below, for long motor cable applications. Greatly extends the life of the motor and cable for all applications up to 1000 feet. For multi-motor applications note that motor lead length is cumulative and the 1000 foot limit still applies. 30% reduction in common mode current enough.

Available types
Open, UL Type 1 and UL Type 3R construction with connection terminals.
Note: The drives internal EMC filter must remain disconnected when using these filters. When applying these output filters the drive output frequency is limited to 60 Hz.

Single phase 200-240V applications

Drive Part # ACS150-01U-	HP ND	Drive Output Current I_{2N}	V1K UL Open				V1K UL Type 1 Enclosure				V1k UL Type 3R Enclosure			
			Part Number	Watts	Dimensions (HxWxD)	Weight	Part Number	Watts	Dimensions (HxWxD)	Weight	Part Number	Watts	Dimensions (HxWxD)	Weight
02A4-2	0.5	2.4	V1K3A00	75	9x5.50x7.25	8	V1K3A01	75	9x5.50x10	11	V1K3A03	75	11.45x10x12	25
04A7-2	1	4.7	V1K6A00	80	9x5.50x7.25	8	V1K6A01	80	9x5.50x10	11	V1K6A03	80	11.45x10x12	25
06A7-2	1.5	6.7	V1K8A00	90	9x5.50x7.25	8	V1K8A01	90	9x5.50x10	11	V1K8A03	90	11.45x10x12	25
07A5-2	2	7.5	V1K8A00	90	9x5.50x7.25	8	V1K8A01	90	9x5.50x10	11	V1K8A03	90	11.45x10x12	25
09A8-2	3	9.8	V1K12A00	95	9x5.50x7.25	8	V1K12A01	95	9x5.50x10	11	V1K12A03	95	11.45x10x12	25

Three phase 200-240V applications

Drive Part # ACS150-03U-	HP ND	Drive Output Current I_{2N}	V1K UL Open				V1K UL Type 1 Enclosure				V1k UL Type 3R Enclosure			
			Part Number	Watts	Dimensions (HxWxD)	Weight	Part Number	Watts	Dimensions (HxWxD)	Weight	Part Number	Watts	Dimensions (HxWxD)	Weight
02A4-2	0.5	2.4	V1K3A00	75	9x5.50x7.25	8	V1K3A01	75	9x5.50x10	11	V1K3A03	75	11.45x10x12	25
03A5-2	0.75	3.5	V1K4A00	75	9x5.50x7.25	8	V1K4A01	75	9x5.50x10	11	V1K4A03	75	11.45x10x12	25
04A7-2	1	4.7	V1K6A00	80	9x5.50x7.25	8	V1K6A01	80	9x5.50x10	11	V1K6A03	80	11.45x10x12	25
06A7-2	1.5	6.7	V1K8A00	90	9x5.50x7.25	8	V1K8A01	90	9x5.50x10	11	V1K8A03	90	11.45x10x12	25
07A5-2	2	7.5	V1K8A00	90	9x5.50x7.25	8	V1K8A01	90	9x5.50x10	11	V1K8A03	90	11.45x10x12	25
09A8-2	3	9.8	V1K12A00	95	9x5.50x7.25	8	V1K12A01	95	9x5.50x10	11	V1K12A03	95	11.45x10x12	25

Three phase 380-480V applications

Drive Part # ACS150-03U-	HP ND	Drive Output Current I_{2N}	V1K UL Open				V1K UL Type 1 Enclosure				V1k UL Type 3R Enclosure			
			Part Number	Watts	Dimensions (HxWxD)	Weight	Part Number	Watts	Dimensions (HxWxD)	Weight	Part Number	Watts	Dimensions (HxWxD)	Weight
01A2-4	0.5	1.2	V1K2A00	75	9x5.50x7.25	8	V1K2A01	75	9x5.50x10	11	V1K2A03	11	11.45x10x12	25
01A9-4	0.75	1.9	V1K2A00	75	9x5.50x7.25	8	V1K2A01	75	9x5.50x10	11	V1K2A03	11	11.45x10x12	25
02A4-4	1	2.4	V1K3A00	75	9x5.50x7.25	8	V1K3A01	75	9x5.50x10	11	V1K3A03	11	11.45x10x12	25
03A3-4	1.5	3.3	V1K4A00	75	9x5.50x7.25	8	V1K4A01	75	9x5.50x10	11	V1K4A03	75	11.45x10x12	25
04A1-4	2	4.1	V1K6A00	80	9x5.50x7.25	8	V1K6A01	80	9x5.50x10	11	V1K6A03	11	11.45x10x12	25
05A6-4	3	5.6	V1K6A00	80	9x5.50x7.25	8	V1K6A01	80	9x5.50x10	11	V1K6A03	11	11.45x10x12	25
07A3-4	3	7.3	V1K8A00	90	9x5.50x7.25	8	V1K8A01	90	9x5.50x10	11	V1K8A03	90	11.45x10x12	25
08A8-4	5	8.8	V1K12A00	95	9x5.50x7.25	8	V1K12A01	95	9x5.50x10	11	V1K12A03	95	11.45x10x12	25