ACS255 IP66 micro drive

Ratings and types

Type designation
This is the unique reference number (shown above and in the first column, below) that clearly identifies your drive by power rating and frame size. Once the drive's type designation has been selected, the frame size (column 7) can be used to determine the drive dimensions, shown on the next page.

Voltages
ACS255 is available in two voltage ranges:

1 = 110 to 120 V
2 = 200 to 240 V
4 = 380 to 480 V
6 = 500 to 600 V

Insert either "1", "2", "4" or "6", depending on your chosen voltage, into the type designation shown above.

Construction
"01U" within the type designation (shown above) varies depending on the drive phase and EMC filtering. Choose below the one you need.

01 = 1-phase
03 = 3-phase
U = No EMC filter
F278 = Operator controls: Disconnect, FWD/REV/OFF selector, Speed Potentiometer

ACS255 IP66 micro drive

Ratings and types

Type code	Braking chopper (included)	P_N HP	P_N kW	Output current I_{2N} A	Weight lb	Frame size
1-phase supply voltage 110 to 120V, +/-10%, 3-phase output 200 to 240 V						
ACS255-01U-02A3-1+B068(+F278)	-	0.5	0.37	2.3	6.5	E1
ACS255-01U-04A3-1+B068(+F278)	-	1.0	0.75	4.3	6.5	E1
ACS255-01U-05A8-1+B068(+F278)	X	1.5	1.1	5.8	9.3	E2
1-phase supply voltage 200 to 240V, +/-10%, 3-phase output 200 to 240 V						
ACS255-01U-02A3-2+B068(+F278)	-	0.5	0.37	2.3	6.5	E1
ACS255-01U-04A3-2+B068(+F278)	-	1.0	0.75	4.3	6.5	E1
ACS255-01U-06A1-2+B068(+F278)	-	1.5	1.1	6.1	6.5	E1
ACS255-01U-07A0-2+B068(+F278)	-	2.0	1.5	7.0	6.5	E1
ACS255-01U-10A5-2+B068(+F278)	X	3.0	2.2	10.5	9.3	E2
ACS255-01U-15A3-2+B068(+F278)	X	5.0	3.7	15.3	17.0	E3
3-phase supply voltage 200 to 240 V, +/-10%						
ACS255-03U-02A3-2+B068(+F278)	-	0.5	0.37	2.3	6.5	E1
ACS255-03U-04A3-2+B068(+F278)	-	1.0	0.75	4.3	6.5	E1
ACS255-03U-06A1-2+B068(+F278)	-	1.5	1.10	6.1	6.5	E1
ACS255-03U-07A0-2+B068(+F278)	X	2.0	1.5	7.0	9.3	E2
ACS255-03U-10A5-2+B068(+F278)	X	3.0	2.2	10.5	9.3	E2
ACS255-03U-18A0-2+B068(+F278)	X	5.0	4.0	18.0	17.0	E3
ACS255-03U-24A0-2+B068(+F278)	X	7.5	5.5	24.0	17.0	E3
ACS255-03U-30A0-2+B068(+F278)	X	10	7.5	30.0	19.8	E4
ACS255-03U-046A-2+B068(+F278)	X	15	11	46.0	19.8	E4
3-phase supply voltage 380 to 480 V, +/-10%						
ACS255-03U-01A2-4+B068(+F278)	-	0.5	0.37	1.2	6.5	E1
ACS255-03U-02A2-4+B068(+F278)	-	1.0	0.75	2.2	6.5	E1
ACS255-03U-03A3-4+B068(+F278)	-	1.5	1.1	3.3	6.5	E1
ACS255-03U-04A1-4+B068(+F278)	-	2.0	1.5	4.1	6.5	E1
ACS255-03U-05A8-4+B068(+F278)	X	3.0	2.2	5.8	9.3	E2
ACS255-03U-09A5-4+B068(+F278)	X	5.0	4.0	9.5	9.3	E2
ACS255-03U-14A0-4+B068(+F278)	X	7.5	5.5	14.0	17.0	E3
ACS255-03U-18A0-4+B068(+F278)	X	10.0	7.5	18.0	17.0	E3
ACS255-03U-24A0-4+B068(+F278)	X	15	11	24.0	17.0	E3
ACS255-03U-30A0-4+B068(+F278)	X	20	15	30.0	19.8	E4
ACS255-03U-39A0-4+B068(+F278)	X	25	18.5	39.0	19.8	E4
ACS255-03U-46A0-4+B068(+F278)	X	30	22	46.0	19.8	E4
3-phase supply voltage 500 to 600 V, +/-10%						
ACS255-03U-02A1-6+B068(+F278)	X	1.0	0.75	2.1	10.6	P2
ACS255-03U-03A1-6+B068(+F278)	X	2.0	1.5	3.1	10.6	P2
ACS255-03U-04A1-6+B068(+F278)	X	3.0	2.2	4.1	10.6	P2
ACS255-03U-06A5-6+B068(+F278)	X	5.0	4.0	6.5	10.6	P2
ACS255-03U-09A0-6+B068(+F278)	X	7.5	5.5	9.0	10.6	P2
ACS255-03U-12A0-6+B068(+F278)	X	10.0	7.5	12.0	16.1	P3
ACS255-03U-17A0-6+B068(+F278)	X	15.0	11.0	17.0	16.1	P3

P_N for kW = Typical motor power in 400 V at normal use
P_N for hp = Typical motor power in 460 V at normal use
I_{2N} for A = Continuous rms current. 50% overload is allowed for one minute in ten minutes.

Fuses and cable sizes

The following table provides the output current rating information for the various ACS255 models. ABB Drives always recommend that selection of the correct ACS255 is based upon the motor full load current at the incoming supply voltage.

Cable dimensioning for nominal rated currents is shown in the table below together with the corresponding fuse types for short-circuit protection of the input power cable.

The rated fuse currents given in the table are the maximums for the mentioned fuse types. If smaller fuse ratings are used, check that the fuse rms current rating is larger than the nominal input current. If 150% output power is needed, multiply nominal input current by 1.5.

Check that the operating time of the fuse is below 0.5 seconds. The operating time depends on the fuse type, the supply network impedance as well as the cross-sectional area, material and length of the supply cable. In case the 0.5 seconds operating time is exceeded with the gG or T fuses, ultra rapid (aR) fuses in most cases reduce the operating time to an acceptable level.

Type Code	Power	Fuse		Maximum Supply and PE Cable Size		Nominal Output Current	Motor Cable Size		Max Motor Cable Length	Frame Size
	HP	A				A				
		gG	UL Class CC or J	mm²	AWG		mm²	AWG	m	
1-phase 110V...115V AC (+/-10%) - 3 Phase 230V Output										
ACS255-01U-02A3-1	0.5	10	10	8	8	2.3	1.5	14	100	E1
ACS255-01U-04A3-1	1	25	20	8	8	4.3	1.5	14	100	E1
ACS255-01U-05A8-1	1.5	32	30	8	8	5.8	1.5	14	100	E2
1-phase 200...240V AC (+/-10%) - 3 Phase Output										
ACS255-01U-02A3-2	0.5	10	6	8	8	2.3	1.5	14	100	E1
ACS255-01U-04A3-2	1	10	10	8	8	4.3	1.5	14	100	E1
ACS255-01U-06A1-2	1.5	16	15	8	8	6.1	1.5	14	100	E1
ACS255-01U-07A0-2	2	16	17.5	8	8	7	1.5	14	100	E2
ACS255-01U-10A5-2	3	25	25	8	8	10.5	1.5	14	100	E2
ACS255-01U-15A3-2	5	40	40	8	8	15.3	4	10	100	E3
3-phase 200...240V AC (+/-10%) - 3 Phase Output										
ACS255-03U-02A3-2	0.5	6	6	8	8	2.3	1.5	14	100	E1
ACS255-03U-04A3-2	1	10	10	8	8	4.3	1.5	14	100	E1
ACS255-03U-06A1-2	1.5	10	15	8	8	6.1	1.5	14	100	E1
ACS255-03U-07A0-2	2	16	15	8	8	7	1.5	14	100	E2
ACS255-03U-10A5-2	3	16	17.5	8	8	10.5	1.5	14	100	E2
ACS255-03U-18A0-2	5	32	30	8	8	18	2.5	10	100	E3
ACS255-03U-24A0-2	7.5	40	35	8	8	24	4	10	100	E4
ACS255-03U-30A0-2	10	40	45	16	5	30	6	8	100	E4
ACS255-03U-46A0-2	15	63	70	16	5	46	10	6	100	E4

Notes:
1) Larger fuses must not be used when the input power cable is selected according to this table.
2) For UL compliant installation, use Copper wire with a minimum insulation temperature rating of 70°C, UL Class CC or Class J Fuses
3) Other fuse types can be used if they meet the ratings and the melting curve of the fuse does not exceed the melting curve of the fuse mentioned in this table.
4) The maximum motor cable length stated applies to using a shielded motor cable. When using an unshielded cable, the maximum cable length limit may be increased by 50%. When using the ABB Drives recommended output choke, the maximum cable length may be increased by 100%
5)The PWM output switching from any inverter when used with a long motor cable length can cause an increase in the voltage at the motor terminals, depending on the motor cable length and inductance. The rise time and peak voltage can affect the service life of the motor. ABB Drives recommend using an output choke for motor cable lengths of 50m or more to ensure good motor service life

Fuses and cable sizes

Type Code	Power	Fuse		Maximum Supply and PE Cable Size		Nominal Output Current	Motor Cable Size		Max Motor Cable Length	Frame Size
	HP	A				A				
		gG	UL Class CC or J	mm²	AWG		mm²	AWG	m	
3-phase 380...480V AC (+/-10%) - 3 Phase Output										
ACS255-03U-01A2-4	0.5	6	6	8	8	1.2	1.5	14	100	E1
ACS255-03U-02A2-4	1	6	6	8	8	2.2	1.5	14	100	E1
ACS255-03U-03A3-4	1.5	10	10	8	8	3.3	1.5	14	100	E1
ACS255-03U-04A1-4	2	10	10	8	8	4.1	1.5	14	100	E2
ACS255-03U-05A8-4	3	16	10	8	8	5.8	1.5	14	100	E2
ACS255-03U-09A5-4	5	16	15	8	8	9.5	1.5	14	100	E2
ACS255-03U-14A0-4	7.5	25	25	8	8	14	1.5	12	100	E3
ACS255-03U-18A0-4	10	32	30	8	8	18	2.5	10	100	E3
ACS255-03U-24A0-4	15	40	35	8	8	24	4	10	100	E4
ACS255-03U-30A0-4	20	40	45	16	5	30	6	8	100	E4
ACS255-03U-39A0-4	25	50	60	16	5	39	10	8	100	E4
ACS255-03U-46A0-4	30	63	70	16	5	46	10	6	100	E4
3-phase 500...600V AC (+/-10%) - 3 Phase Output										
ACS255-03U-02A1-6	1	10	6	1.5	14	2.1	1.5	14	100	P2
ACS255-03U-03A1-6	2	10	6	1.5	14	3.1	1.5	14	100	P2
ACS255-03U-04A1-6	3	10	10	1.5	14	4.1	1.5	14	100	P2
ACS255-03U-06A5-6	5	10	10	1.5	14	6.5	1.5	14	100	P2
ACS255-03U-09A0-6	7.5	16	15	2.5	12	9	1.5	14	100	P2
ACS255-03U-12A0-6	10	25	20	4	10	12	1.5	14	100	P3
ACS255-03U-17A0-6	15	25	25	4	8	17	2.5	10	100	P3
ACS255-03U-22A0-6	20	40	35	10	8	22	4	10	100	P3

Notes:

1) Larger fuses must not be used when the input power cable is selected according to this table.
2) For UL compliant installation, use Copper wire with a minimum insulation temperature rating of 70°C, UL Class CC or Class J Fuses
3) Other fuse types can be used if they meet the ratings and the melting curve of the fuse does not exceed the melting curve of the fuse mentioned in this table.
4) The maximum motor cable length stated applies to using a shielded motor cable. When using an unshielded cable, the maximum cable length limit may be increased by 50%. When using the ABB Drives recommended output choke, the maximum cable length may be increased by 100%
5)The PWM output switching from any inverter when used with a long motor cable length can cause an increase in the voltage at the motor terminals, depending on the motor cable length and inductance. The rise time and peak voltage can affect the service life of the motor. ABB Drives recommend using an output choke for motor cable lengths of 50m or more to ensure good motor service life

Control connections

115, 240, 480 V drives

IP66 (NEMA 4X) Switched Units

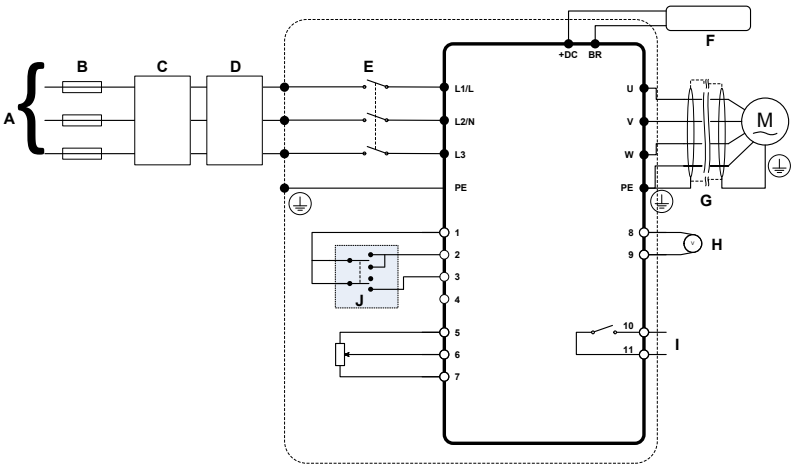

	Power Connections
A	Incoming Power Source
B	External Fuse
C	Optional Input Choke
D	Optional Input Filter
E	Internal Mains Disconnect
F	Optional Brake Resistor
G	Shielded Motor Cable
I	Relay Output
	Control Connections
J	Internal Forward / Off / Reverse Switch
K	Internal Speed Control Pot
8	Analog Output: 0 – 10 Volts
9	0 Volt
10	Relay Output
11	'Drive READY' = Closed

IP20 & IP66 (NEMA 4X) Non-Switched Units

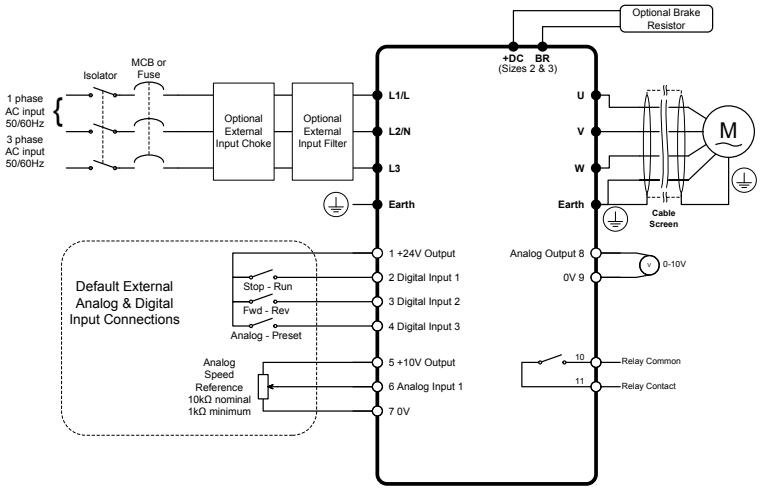

	Power Connections
A	Incoming Power Source
B	External Mains Disconnect
C	External Fuse
D	Optional Input Choke
E	Optional Input Filter
F	Optional Brake Resistor
G	Shielded Motor Cable
I	Relay Output
	Control Connections
1	+ 24 Volt (100mA) User Output
2	Digital Input 1: Drive Run / Stop
3	Digital Input 2: Forward / Reverse
4	Digital Input 3: Analog / Preset Speed
5	+ 10 Volt Output
6	Analog Input 1: 0 – 10 Volt
7	0 Volt
8	Analog Output: 0 – 10 Volts
9	0 Volt
10	Relay Output
11	'Drive READY' = Closed

Typical I/O Connections

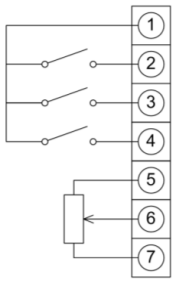

1	+24 Volt
2	Run (Enable)
3	For / Rev
4	Analog / Preset
5	+ 10 Volts
6	Reference
7	0 Volts

Analog speed input with 1 preset speed and fwd/rev switch

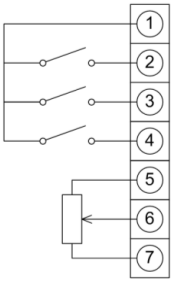

1	+24 Volt
2	Run (Enable)
3	Analog / Preset
4	Preset 1 / Preset 2
5	+ 10 Volts
6	Reference
7	0 Volts

Analog speed input with 2 preset speeds

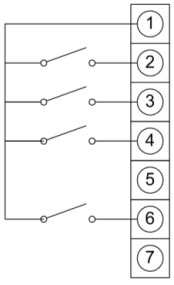

1	+24 Volt
2	Run (Enable)
3	Preset Speeds 1-4 Select
4	
5	
6	Preset / Max
7	

4 preset speeds and max speed select switch. Effectively giving 5 preset speeds

Control connections

600V drives

Power Terminal Designations

Incoming Power Source
Connect to L1, L2 & L3
Phase sequence is not important

Protective Earth / Ground connection
The drive must be Earthed / Grounded

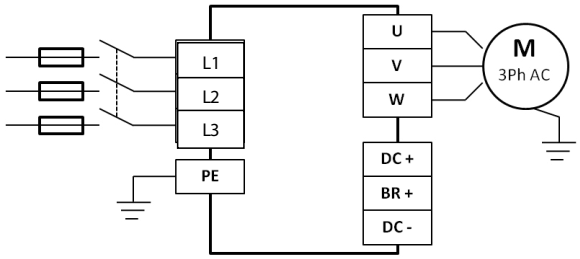

Motor Connections
Connect the motor to the U, V & W terminals
The motor eart must be connected to the drive

Optional Brake Resistor & DC Bus Connections
Where a Brake Resistor is used, it must be connected to the “BR” and “+” terminals .

The brake resistor should be protected from overheating by means of a thermal switch which interrupts the mains supply in a brake resistor fault situation.

Control Terminal Connections & Factory Settings

	Open	Closed			
+24V Supply (100mA) / External Input			+24V	1	
Digital Input 1	Stop	Run (Enable)	DI1	2	
Digital Input 2	Forward Rotation	Reverse Rotation	DI2	3	
Digital Input 3	Analog Speed Ref	Preset Speed	DI3	4	
Digital Inputs: 8 - 30 Volt DC +10 Volt, 10mA Output			+10V	5	
Analog Input 1			DI/AI4	6	
			0V	7	0V
Analog Ouput: 0 - 10 Volt / 4 - 20mA, 20mA Max				8	AO1
0 Volt Supply / External Input			0V	9	0V
Analog Input 2			DI/AI5	10	
Analog Ouput: 0 - 10 Volt / 4 - 20mA, 20mA Max				11	AO2
SAFE TORQUE OFF Input Refer to User Manual 3AUA0000138354 for further information on the STO function. Logic High = 18-30 Volt DC ("SAFE TORQUE OFF" Standby mode)			STO+	12	
			STO-	13	
				14	R01COM
				15	R01NO
				16	R01NC
				17	R02NO
				18	R02COM

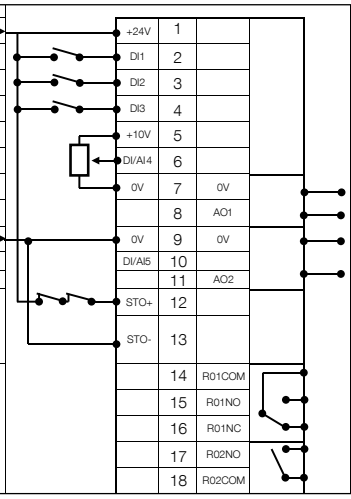

Output Speed
Output Current
Default Function: Drive Ready / Fault
Default Function: Running

Typical I/O Connections

(Default Macro)	Open	Closed
1	+24 Volt Common	
2	Stop	Run
3	Forward Rotation	Reverse Rotation
4	Selected Speed ref	Preset Speed ref
5	+10 Volt	
6	Analog Input 1	
7	0 Volts	
8		
9	0 Volts	
10	Preset Speed 1	Preset Speed 2
11		
12	Safe Inhibit	Normal Operation
13	Safe Inhibit	Normal Operation

Analog speed input w/ 1 preset speed & Fwd/Rev

	Open	Closed		
1	+24 Volt Common			
2	Stop	Run		
3	Forward Rotation	Reverse Rotation		
4				
5	Term. 4	Term. 6	Term. 10	Preset
6	Open	Open	Open	Speed 1
7	Closed	Open	Open	Speed 2
8	Open	Closed	Open	Speed 3
9	Closed	Closed	Open	Speed 4
10				
11				
12	Safe Inhibit	Normal Operation		
13	Safe Inhibit	Normal Operation		

Fwd/Rev w/ preset speeds

	Open	Closed
1	+24 Volt Common	
2	Stop	Run
3	Forward Rotation	Reverse Rotation
4	Selected Speed ref	Preset Speed 1
5	+10 Volt	
6	Analog Input 1	
7	0 Volts	
8		
9		
10	Decelramp 1	Decelramp 2
11		
12	Safe Inhibit	Normal Operation
13	Safe Inhibit	Normal Operation

Analog speed input w/ Fwd/Rev and two decel ramps

ACS255 IP20 micro drive

Dimensions and weights

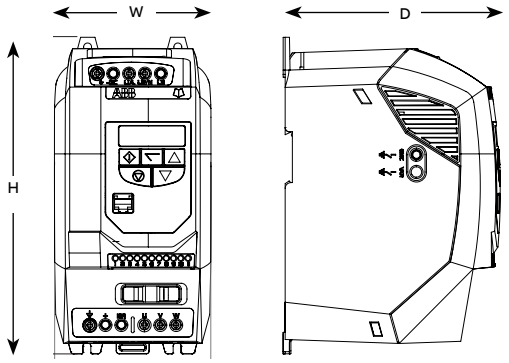

120 V

IP20 120V

Frame size	Height		Width		Depth		Weight		Dimension drawing
	in	mm	in	mm	in	mm	lb	kg	
E1	6.81	173	3.23	82	4.84	123	2.20	1	3AXD10000598750
E2	8.70	221	4.29	109	5.91	150	3.75	1.70	3AXD10000598752

H = Height
W = Width
D = Depth

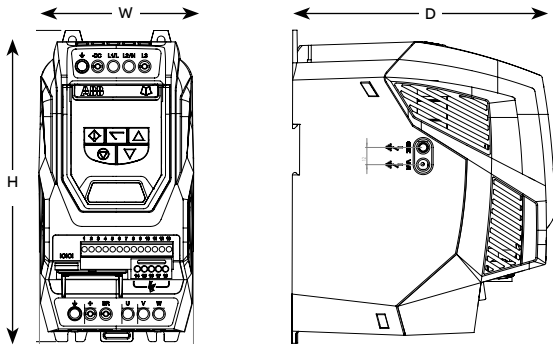

600 V

IP20 600V

Frame size	Height		Width		Depth		Weight		Dimension drawing
	in	mm	in	mm	in	mm	lb	kg	
P2	8.70	221	4.41	112	7.28	185	4	1.80	3AXD10000598764
P3	10.28	261	5.16	131	8.07	205	7.70	3.50	3AXD10000598766

H = Height
W = Width
D = Depth

ACS255 IP66 micro drive

Dimensions and weights

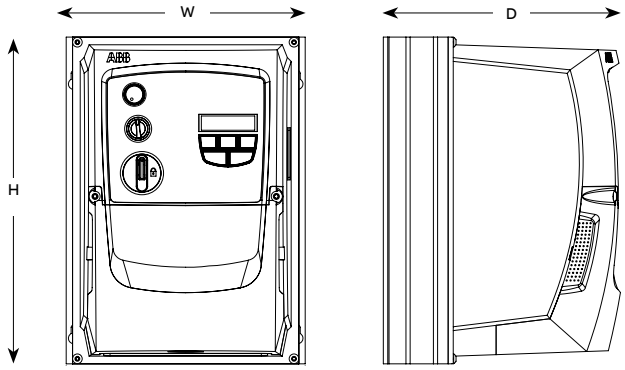

120, 240, 480 V

IP66 120, 240, 480V

Frame size	Height		Width		Depth		Weight		Dimension drawing
	in	mm	in	mm	in	mm	lb	kg	
E1	9.13	232	6.34	161	7.05	179	6.50	2.95	3AXD10000598754
E2	10.12	257	7.40	188	7.34	186	9.26	4.20	3AXD10000598755
E3	12.20	310	8.29	210	9.00	229	16.97	7.70	3AXD10000598756
E4	14.17	360	9.45	240	10.63	270	19.84	9.0	3AXD10000598757

H = Height
W = Width
D = Depth

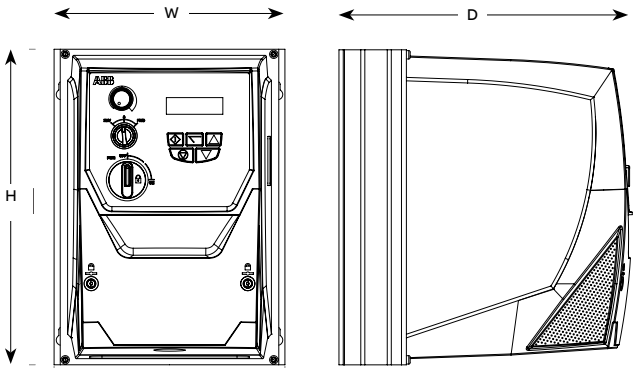

600 V

IP66 600V

Frame size	Height		Width		Depth		Weight		Dimension drawing
	in	mm	in	mm	in	mm	lb	kg	
P2	10.12	257	7.40	188	9.41	239	10.60	4.80	3AXD10000274017
P3	12.20	310	8.29	211	9.88	251	16.10	7.30	3AXD10000274018

H = Height
W = Width
D = Depth