Solid-state Multi-functional Timers

H3CR-A

CSM_H3CR-A_DS_E_6_2

Multiple Operating Modes and Multiple Time Ranges. DIN 48 x 48-mm Multifunctional Timer with Wide AC/DC Power Supply Range for Both High and Low Voltages.

- A wide AC/DC power supply range greatly reduces the number of timer models kept in stock.
- A wide range of applications with multiple operating modes, six modes for 11-pin models and four modes for 8-pin models.
- Ecological design with reduced current consumption.
- Easy sequence checking with instantaneous outputs for a zero set value.
- Length of 80 mm or less when panel-mounted with a P3GA-11 Socket (H3CR-A8E, 100 to 240 VAC, 100 to 125 VDC)
- PNP input models available.
- Standards: UL, CSA, NK, LR, EN 61812-1, and CE Marking.

Model Number Structure

■ Model Number Legend

Note: This model number legend includes combinations that are not available. Before ordering, please check the *List of Models* on page 2 for availability.

H3CR-A□ □ □ - □ □
1 2 3 4 5

1. **Number of Pins**
   None: 11-pin models
   8: 8-pin models
2. **Input Type for 11-pin Models**
   None: No-voltage input (NPN type)
   P: Voltage input (PNP type)
3. **Output**
   None: Relay output (DPDT)
   S: Transistor output (NPN/PNP universal use)
   E: Relay output (SPDT) with instantaneous relay output (SPDT)
4. **Suffix**
   300: Dual mode models (signal ON/OFF-delay and one-shot)
   301: Double time scale (range) models (0.1 s to 600 h)
5. **Supply Voltage**
   100-240AC/100-125DC: 100 to 240 VAC/100 to 125 VDC
   24-48AC/12-48DC: 24 to 48 VAC/12 to 48 VDC
   24-48AC/DC: 24 to 48 VAC/VDC (Only for H3CR-A8E)

Ordering Information

■ List of Models

Note: 1. Specify both the model number and supply voltage when ordering.
Example: H3CR-A 100-240AC/100-125DC
└── Supply voltage

2. The operating modes are as follows

A:	ON-delay	D:	Signal OFF-delay
B:	Flicker OFF start	E:	Interval
B2:	Flicker ON start	G:	Signal ON/OFF-delay
C:	Signal ON/OFF-delay	J:	One-shot

11-pin Models

Output	Supply voltage	Input type	Time range	Operating mode (See note 2)	Model (See note 1.)
Contact	100 to 240 VAC (50/60 Hz)/ 100 to 125 VDC	No-voltage input	0.05 s to 300 h	Six multi-modes: A, B, B2, C, D, E	H3CR-A
	24 to 48 VAC (50/60 Hz)/ 12 to 48 VDC				
	100 to 240 VAC (50/60 Hz)/ 100 to 125 VDC			Dual-modes: G, J	H3CR-A-300
	24 to 48 VAC (50/60 Hz)/ 12 to 48 VDC				
	100 to 240 VAC (50/60 Hz)/ 100 to 125 VDC	Voltage input		Six multi-modes: A, B, B2, C, D, E	H3CR-AP
	24 to 48 VAC (50/60 Hz)/ 12 to 48 VDC				
	100 to 240 VAC (50/60 Hz)/ 100 to 125 VDC	No-voltage input	0.1 s to 600 h		H3CR-A-301
	24 to 48 VAC (50/60 Hz)/ 12 to 48 VDC				
Transistor (Photocoupler)	24 to 48 VAC (50/60 Hz)/ 12 to 48 VDC		0.05 s to 300 h		H3CR-AS

8-pin Models

Output	Supply voltage	Input type	Time range	Operating mode (See note 2)	Model (See note 1.)
Contact	100 to 240 VAC (50/60 Hz)/ 100 to 125 VDC	No-input available	0.05 s to 300 h	Four multi-modes: A, B2, E, J (Power supply start)	H3CR-A8
	24 to 48 VAC (50/60 Hz)/ 12 to 48 VDC				
	100 to 240 VAC (50/60 Hz)/ 100 to 125 VDC		0.1 s to 600 h		H3CR-A8-301
	24 to 48 VAC (50/60 Hz)/ 12 to 48 VDC				
Transistor (Photocoupler)	24 to 48 VAC (50/60 Hz)/ 12 to 48 VDC		0.05 s to 300 h		H3CR-A8S
Time-limit contact and instantaneous contact	100 to 240 VAC (50/60 Hz)/ 100 to 125 VDC				H3CR-A8E
	24 to 48 VAC/VDC (50/60 Hz)				

■ Accessories (Order Separately)

Adapter, Protective Cover, Hold down Clip, Setting Ring and Panel Cover

Name/specifications		Models
Flush Mounting Adapter		Y92F-30
		Y92F-73
		Y92F-74
Protective Cover		Y92A-48B
Hold-down Clip (Sold in sets of two)	**For PF085A Socket**	Y92H-8
	For PL08 and PL11 Sockets	Y92H-7
Setting Ring A		Y92S-27
Setting Ring B and C		Y92S-28
Panel Cover	**Light gray (5Y7/1)**	Y92P-48GL
	Black (N1.5)	Y92P-48GB
	Medium gray (5Y5/1)	Y92P-48GM

Sockets

Timer	Round Sockets		
Pin	**Connection**	**Terminal**	**Models**
11-pin	Front Connecting	DIN track mounting	**P2CF-11**
		DIN track mounting (Finger-safe type)	**P2CF-11-E**
	Back Connecting	Screw terminal	**P3GA-11**
		Solder terminal	**PL11**
		Wrapping terminal	**PL11-Q**
		PCB terminal	**PLE11-0**
8-pin	Front Connecting	DIN track mounting	**P2CF-08**
		DIN track mounting (Finger-safe type)	**P2CF-08-E**
		DIN track mounting	**PF085A**
	Back Connecting	Screw terminal	**P3G-08**
		Solder terminal	**PL08**
		Wrapping terminal	**PL08-Q**
		PCB terminal	**PLE08-0**

Note: 1. The P2CF-□□-E has a finger-protection structure. Round crimp terminals cannot be used. Use forked crimp terminals.
2. The P3GA-11 and P3G-08 Socket can be used together with the Y92A-48G Terminal Cover to implement finger protection.
3. For details, refer to *Socket and DIN Track Products*.

Terminal Cover

Application	Model	Remarks
For back connecting socket	**Y92A-48G**	For P3G-08 and P3GA-11

Note: For details, refer to *Socket and DIN Track Products*.

Specifications

■ General

Item	H3CR-A/-AS	H3CR-AP	H3CR-A8/-A8S	H3CR-A8E
Operating mode	A: ON-delay B: Flicker OFF start B2: Flicker ON start C: Signal ON/OFF-delay D: Signal OFF-delay E: Interval G: Signal ON/OFF-delay (Only for H3CR-A-300) J: One-shot (Only for H3CR-A-300)		A: ON-delay (power supply start) B2: Flicker ON start (power supply start) E: Interval (power supply start) J: One-shot (power supply start)	
Pin type	11-pin		8-pin	
Input type	No-voltage input	Voltage input	---	
Time-limit output type	H3CR-A/-A8/-AP: Relay output (DPDT) H3CR-AS/-A8S: Transistor output (NPN/PNP universal)*			Relay output (SPDT)
Instantaneous output type	---			Relay output (SPDT)
Mounting method	DIN track mounting, surface mounting, and flush mounting			
Approved standards	UL508, CSA C22.2 No.14, NK, Lloyds Conforms to EN61812-1 and IEC60664-1 (VDE0110) 4kV/2. Output category according to EN60947-5-1 for Timers with Contact Outputs. Output category according to EN60947-5-2 for Timers with Transistor Outputs.			

*The internal circuits are optically isolated from the output. This enables universal application as NPN or PNP transistor.

■ Time Ranges

Note: When the time setting knob is turned below “0” until the point where the time setting knob stops, the output will operate instantaneously at all time range settings.

Standard (0.05-s to 300-h) Models

Time unit		s (sec)	min (min)	h (hrs)	×10 h (10 hrs)
Full scale setting	1.2	0.05 to 1.2	0.12 to 1.2		1.2 to 12
	3	0.3 to 3			3 to 30
	12	1.2 to 12			12 to 120
	30	3 to 30			30 to 300

Double (0.1-s to 600-h) Models

Time unit		s (sec)	min (min)	h (hrs)	×10 h (10 hrs)
Full scale setting	2.4	0.1 to 2.4	0.24 to 2.4		2.4 to 24
	6	0.6 to 6			6 to 60
	24	2.4 to 24			24 to 240
	60	6 to 60			60 to 600

■ Ratings

Rated supply voltage (See notes 1, 2, and 5.)	100 to 240 VAC (50/60 Hz)/100 to 125 VDC, 24 to 48 VAC (50/60 Hz)/12 to 48 VDC (24 to 48 VAC/VDC for H3CR-A8E) (See note3.)
Operating voltage range	85% to 110% of rated supply voltage (90% to 110% at 12 VDC)
Power reset	Minimum power-opening time: 0.1 s
Input	No-voltage Input ON impedance: 1 kΩ max. ON residual voltage: 1 V max. OFF impedance: 100 kΩ min. Voltage Input Max. permissible capacitance between inputs lines (terminals 6 and 7): 1,200 pF Load connectable in parallel with inputs (terminals 6 and 7). • 100 to 240 VAC/100 to 125 VDC High (logic) level: 85 to 264 VAC/85 to 137.5 VDC Low (logic) level: 0 to 10 VAC/0 to 10 VDC • 24 to 48 VAC/12 to 48 VDC High (logic) level: 20.4 to 52.8 VAC/10.8 to 52.8 VDC Low (logic) level: 0 to 2.4 VAC/0 to 1.2 VDC
Power consumption	H3CR-A/-A8 • 100 to 240 VAC/100 to 125 VDC (When at 240 VAC, 60 Hz) Relay ON: approx. 2.0 VA (1.6 W) Relay OFF: approx. 1.3 VA (1.1 W) • 24 to 48 VAC/12 to 48 VDC (When at 24 VDC) Relay ON: approx. 0.8 W Relay OFF: approx. 0.2 W H3CR-AP (See note 3) • 100 to 240 VAC/100 to 125 VDC (When at 240 VAC, 60 Hz) Relay ON: approx. 2.5 VA (2.2 W) (See note 4.) Relay OFF: approx. 1.8 VA (1.7 W) (See note 4.) • 24 to 48 VAC/12 to 48 VDC (When at 24 VDC) Relay ON: approx. 0.9 W (See note 4.) Relay OFF: approx. 0.3 W (See note 4.) H3CR-A8E • 100 to 240 VAC/100 to 125 VDC (When at 240 VAC, 60 Hz) Relay ON/OFF: approx. 2 VA (0.9 W) • 24 to 48 VAC/VDC (When at 24 VDC) Relay ON/OFF: approx. 0.9 W H3CR-AS/-A8S • 24 to 48 VAC/12 to 48 VDC (When at 24 VDC) Output ON: 0.3 W Output OFF: 0.2 W
Control outputs	Time limit contacts: 5 A at 250 VAC/30 VDC, 0.15 A at 125 VDC, resistive load (cosϕ = 1) Transistor output: Open collector (NPN/PNP), 100 mA max. at 30 VDC max., residual voltage: 2 V max. Instantaneous contact: 5 A at 250 VAC/30 VDC, 0.15 A at 125 VDC, resistive load (cosϕ = 1)

Note: 1. DC ripple rate: 20% max. (A single-phase, full-wave-rectification power supply can be used).

2. Do not use an inverter output as the power supply. Refer to *Safety Precautions for All Timers* for details.

3. Models with 24-to-48-VAC or 12-to-48-VDC power supply have inrush current. Caution is thus required when turning ON and OFF power to the Timer with a non-contact output from a device such as a sensor. (Models with an inrush current of approximately 50 mA and a 24-VDC power supply are available (the H3CR-A-302 and H3CR-A8-302).)

4. The values are for when the terminals 2 and 7 and terminals 10 and 6 are short-circuited, and include the consumption current of the input circuit.

5. Refer to *Safety Precautions for All Timers* when using the Timer together with a 2-wire AC proximity sensor.

■ Characteristics

Accuracy of operating time	±0.2% FS max. (±0.2%±10 ms max. in a range of 1.2 s or 3 s)
Setting error	±5% FS ±50 ms (See note 1)
Reset time	Min. power-opening time: 0.1 s max. Min. pulse width: 0.05 s (H3CR-A/-AS)
Reset voltage	10% max. of rated supply voltage
Influence of voltage	±0.2% FS max. (±0.2%±10 ms max. in a range of 1.2 s or 3 s)
Influence of temperature	±1% FS max. (±1%±10 ms max. in a range of 1.2 s or 3 s)
Insulation resistance	100 MΩ min. (at 500 VDC)
Dielectric strength	2,000 VAC (1,000 VAC for H3CR-A□S), 50/60 Hz for 1 min (between current-carrying metal parts and exposed non-current-carrying metal parts) 2,000 VAC (1,000 VAC for H3CR-A□S), 50/60 Hz for 1 min (between control output terminals and operating circuit) 2,000 VAC, 50/60 Hz for 1 min (between contacts of different polarities) 1,000 VAC, 50/60 Hz for 1 min (between contacts not located next to each other) 2,000 VAC, 50/60 Hz for 1 min (between input and control output terminals and operation circuit) for H3CR-AP
Impulse withstand voltage	3 kV (between power terminals) for 100 to 240 VAC/100 to 125 VDC, 1 kV for 24 to 48 VAC/12 to 48 VDC 4.5 kV (between current-carrying terminal and exposed non-current-carrying metal parts) for 100 to 240 VAC/100 to 125 VDC, 1.5 kV for 24 to 48 VAC/12 to 48 VDC and 24 to 48 VAC/VDC
Noise immunity	±1.5 kV (between power terminals) and ±600 V (between no-voltage input terminals), square-wave noise by noise simulator (pulse width: 100 ns/1 μs, 1-ns rise)
Static immunity	Malfunction: 8 kV Destruction: 15 kV
Vibration resistance	Destruction: 10 to 55 Hz with 0.75-mm single amplitude each in 3 directions for 2 hours each Malfunction: 10 to 55 Hz with 0.5-mm single amplitude each in 3 directions for 10 minutes each
Shock resistance	Destruction: 1,000 m/s^2 3 times each in 6 directions Malfunction: 100 m/s^2 3 times each in 6 directions
Ambient temperature	Operating: –10°C to 55°C (with no icing) Storage: –25°C to 65°C (with no icing)
Ambient humidity	Operating: 35% to 85%
Life expectancy	Mechanical: 20,000,000 operations min. (under no load at 1,800 operations/h) Electrical: 100,000 operations min. (5 A at 250 VAC, resistive load at 1,800 operations/h) (See note 2)
EMC	(EMI) EN61812-1 Emission Enclosure: EN55011 Group 1 class A Emission AC Mains: EN55011 Group 1 class A (EMS) EN61812-1 Immunity ESD: IEC61000-4-2: 6 kV contact discharge (level 3) 8 kV air discharge (level 3) Immunity RF-interference from AM Radio Waves: IEC61000-4-3: 10 V/m (80 MHz to 1 GHz) (level 3) Immunity RF-interference from Pulse-modulated Radio Waves: IEC61000-4-3: 10 V/m (900±5 MHz) (level 3) Immunity Conducted Disturbance: IEC61000-4-6: 10 V (0.15 to 80 MHz) (level 3) Immunity Burst: IEC61000-4-4: 2 kV power-line (level 3) 2 kV I/O signal-line (level 4) Immunity Surge: IEC61000-4-5: 1 kV line to line (level 3) 2 kV line to ground (level 3)
Case color	Light gray (Munsell 5Y7/1)
Degree of protection	IP40 (panel surface)
Weight	Approx. 90 g

Note: 1. The value is ±5% FS +100 ms to –0 ms max. when the C, D, or G mode signal of the H3CR-AP is OFF.
2. Refer to the *Life-test Curve*.
3. Relay output only.

■ Life-test Curve

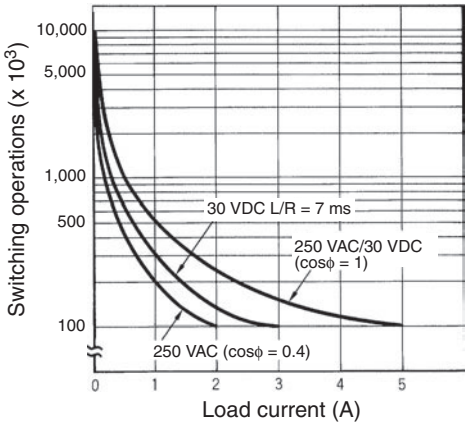

Reference: A maximum current of 0.15 A can be switched at 125 VDC (cosϕ = 1) and a maximum current of 0.1 A can be switched if L/R is 7 ms. In both cases, a life of 100,000 operations can be expected.
The minimum applicable load is 10 mA at 5 VDC (failure level: P).

Connections

■ Block Diagrams

H3CR-A/AS

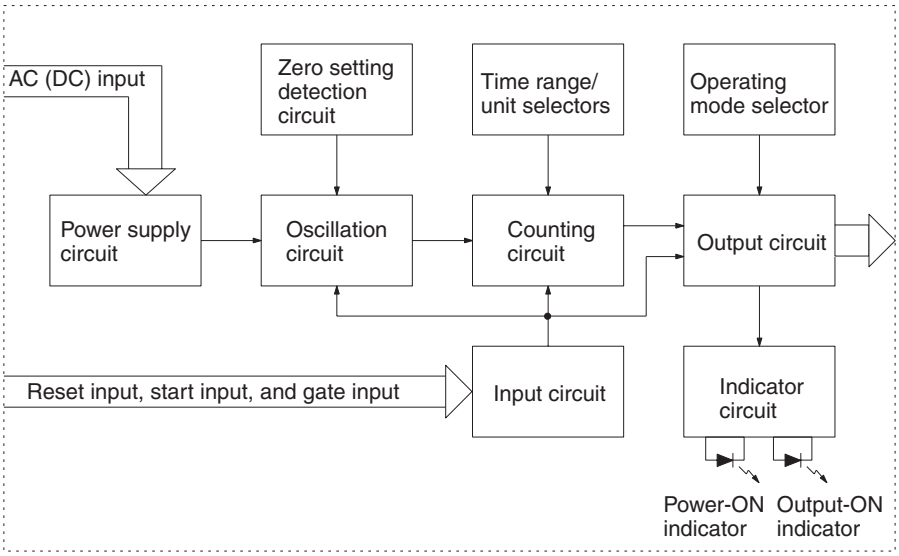

H3CR-AP

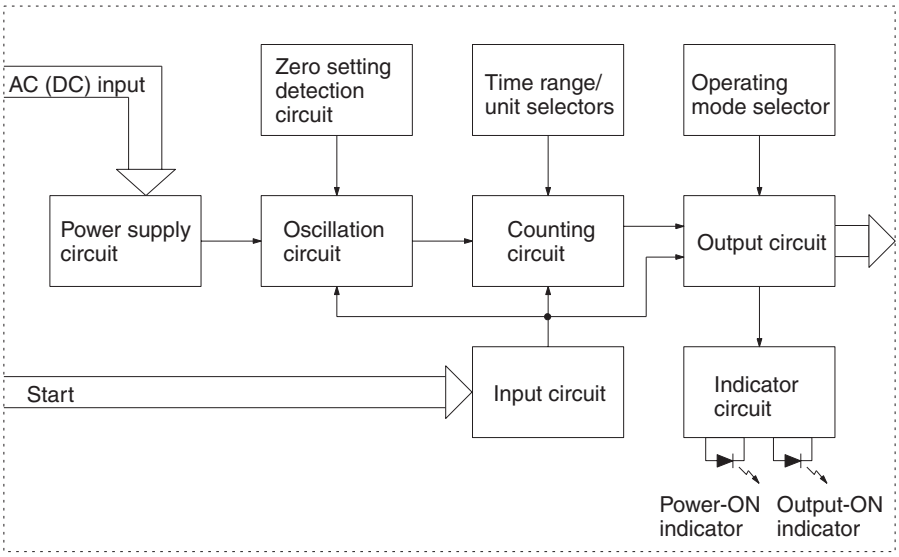

H3CR-A8/A8S

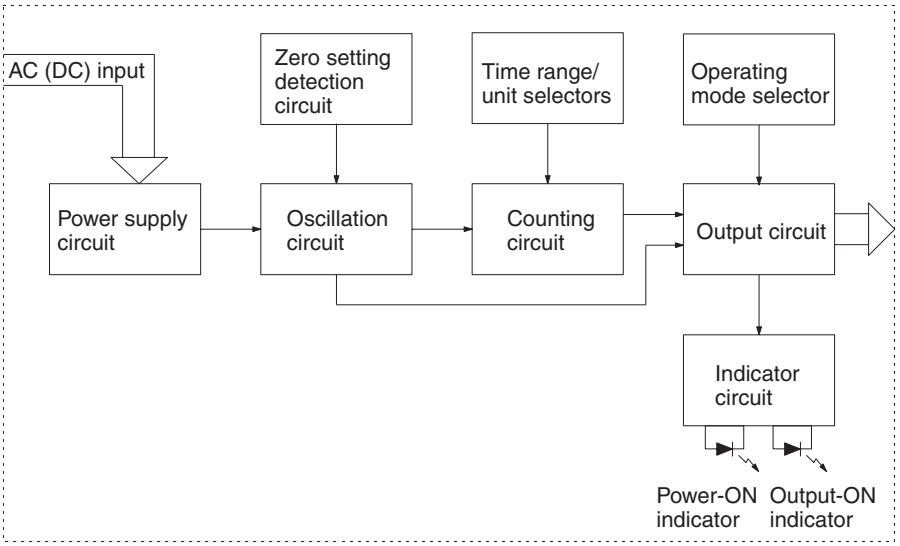

H3CR-A8E

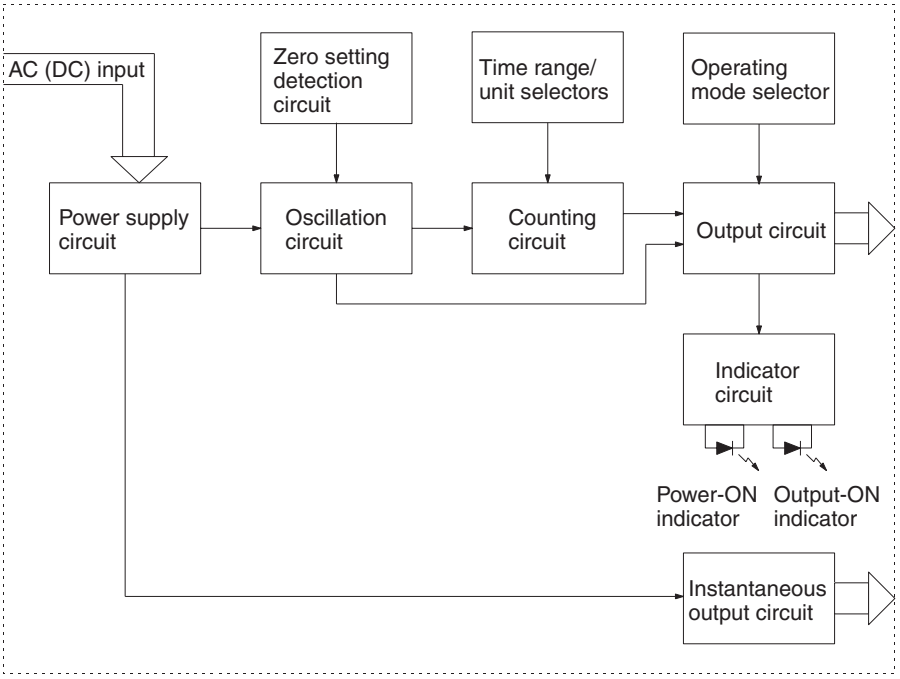

■ I/O Functions

Inputs (for -A/ -AS models)	**Start**	Starts time-measurement.
	Reset	Interrupts time-measurement and resets time-measurement value. No time-measurement is made and control output is OFF while the reset input is ON.
	Gate	Prohibits time-measurement.
Outputs	**Control output**	Outputs are turned ON according to designated output mode when preset value is reached.

Note: H3CR-AP incorporates start input only.

■ Terminal Arrangement

Note: The delayed contact of conventional Timers was indicated as

The contact symbol of the H3CR-A is indicated as because its operating mode is six multi-modes (four multi-modes for the H3CR-A8).

11-pin Models

H3CR-A/-A-300/-A-301 (Contact Output)

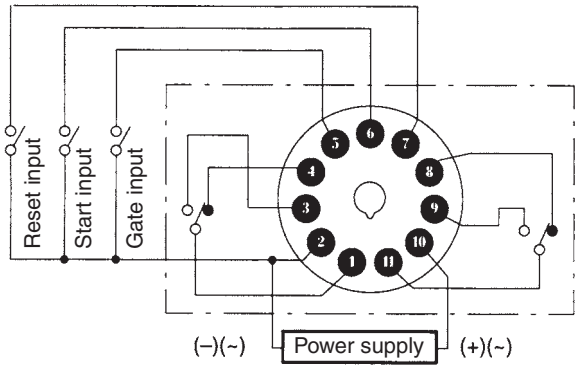

H3CR-AS (Transistor Output)

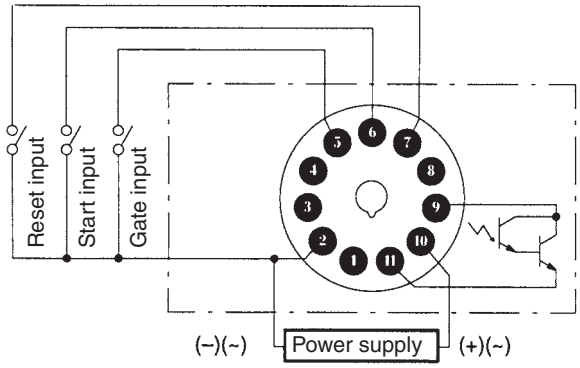

Note: Terminals 1, 3, 4, and 8 are empty. Terminals 2, 5, 6, 7, and 10 are the same as for the H3CR-A.

H3CR-AP (Contact Output)

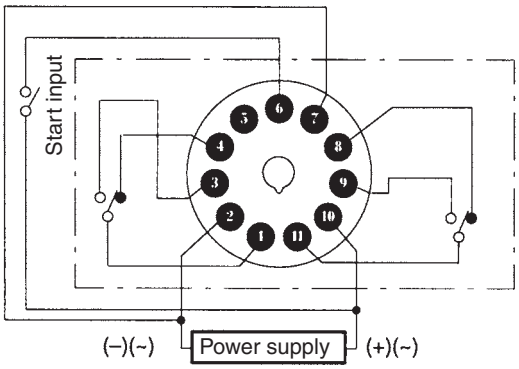

Note: 1. Terminal 5 is empty.
2. Separate power supplies can be used for the Timer and inputs.

8-pin Models

H3CR-A8/-A8-301 (Contact Output)

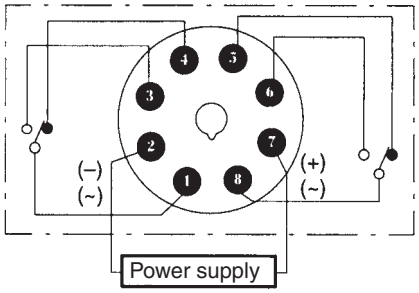

H3CR-A8S (Transistor Output)

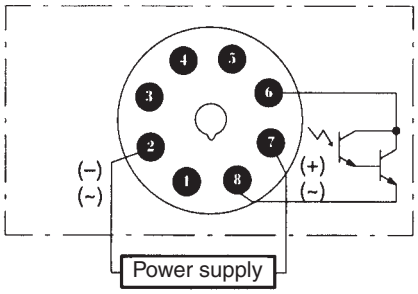

Note: Terminals 1, 3, 4, and 5 are empty. Terminals 2 and 7 are the same as for the H3CR-A8.

H3CR-A8E (Contact Output)

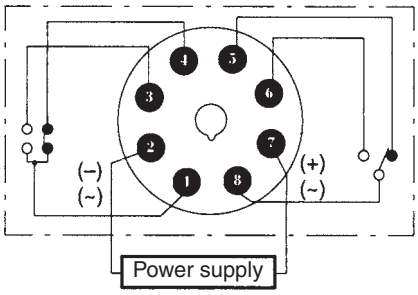

■ Input Connections

H3CR-A/-AS

The inputs of the H3CR-A/-AS are no-voltage (short-circuit or open) inputs.

No-voltage Inputs

No-contact Input

(Connection to NPN open collector output sensor.)

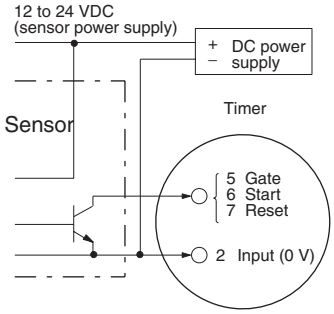

Operates with transistor ON

Contact Input

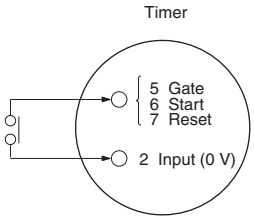

Operates with relay ON

No-contact Input

(Connection to a voltage output sensor.)

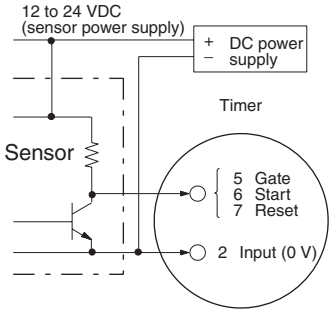

Operates with transistor ON

No-voltage Input Signal Levels

No-contact input	1. Short-circuit level Transistor ON Residual voltage: 1 V max. Impedance when ON: 1 kΩ max.
	2. Open level Transistor OFF Impedance when OFF: 100 kΩ min.
Contact input	Use contacts which can adequately switch 0.1 mA at 5 V

H3CR-AP

The start input of the H3CR-AP is voltage input. (Voltage imposition or open)

Voltage Inputs

No-contact Input
(Connection to PNP open collector output sensor)

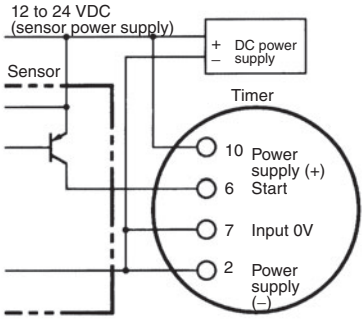

Operates with PNP transistor ON

No-contact Input
(Connection to NPN open collector output sensor)

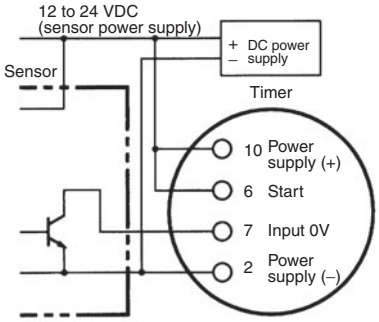

Operates with NPN transistor ON

Note: The input circuit is isolated from the power supply circuit. Thus, an NPN transistor can be connected.

Contact Input

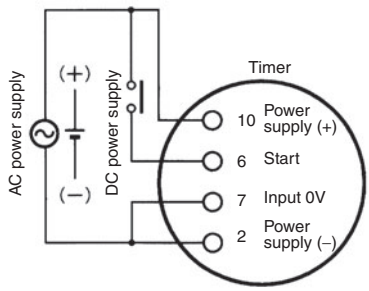

Operates with relay ON

Note: Refer to the signal levels in the following table and be aware of the minimum applicable load of the relay.

Note: Before making connections, refer to *Safety Precautions (H3CR-□)*.

Voltage Input Signal Levels

No-contact input	1. Transistor ON Residual voltage: 1 V max. The voltage between terminals 6 and 7 must be 10.8 VDC min.
	2. Transistor OFF Leakage current: 0.01 mA max. The voltage between terminals 6 and 7 must be 1.2 VDC max.
Contact input	Use contacts that can adequately switch 0.1 mA at each operating voltage. The voltage between terminals 6 and 7 with contacts ON or OFF must satisfy the specified value. Contacts ON 100-to-240-VAC and 100-to-125-VDC models: 85 to 264 VAC or 85 to 137.5 VDC 24-to-48-VAC and 12-to-48-VDC models: 20.4 to 52.8 VAC or 10.8 to 52.8 VDC Contacts OFF 100-to-240-VAC and 100-to-125-VDC models: 0 to 10 VAC or 0 to 10 VDC 24-to-48-VAC and 12-to-48-VDC models: 0 to 2.4 VAC or 0 to 1.2 VDC

Operation

■ Timing Chart

Note: 1. The minimum power-opening time (“Rt”) is 0.1 s.
2. The minimum input pulse width (for start, reset) is 0.05 s.
3. The letter “t” in the timing charts stands for the set time and “t–a” means that the period is less than the time set.
4. Power supply start in mode J is also possible for H3CR-A8/-A8E/-A8S/-A8-301 models.
5. Refer to page 17 for application examples.

H3CR-A/-AS/-AP*

*H3CR-AP model incorporates start input only.

Operating mode	Timing chart
A: ON-delay	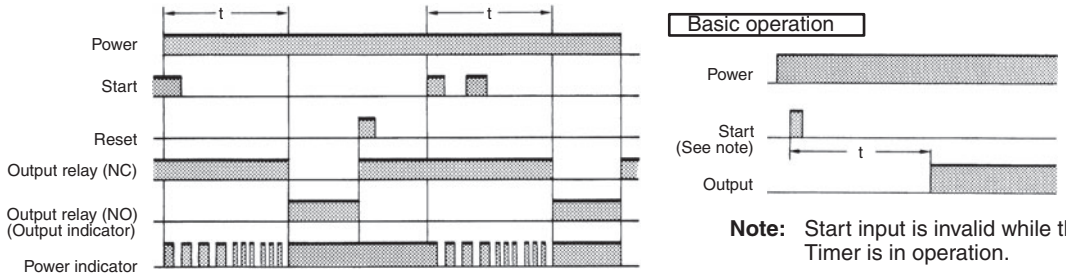
B: Flicker OFF start	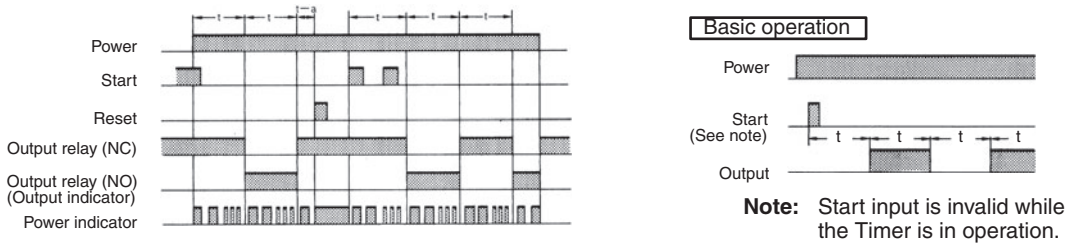
B2: Flicker ON start	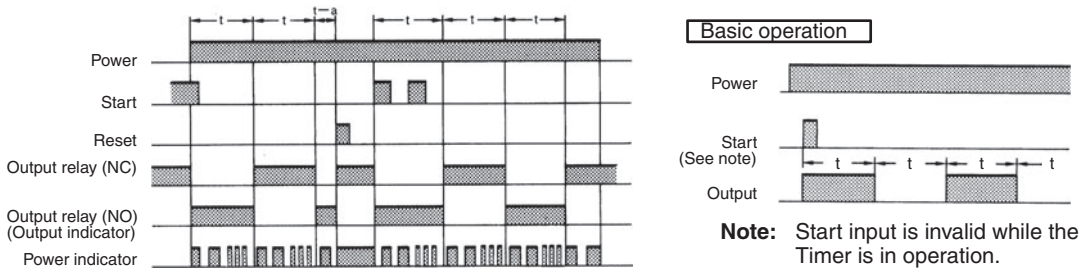
C: Signal ON/ OFF-delay	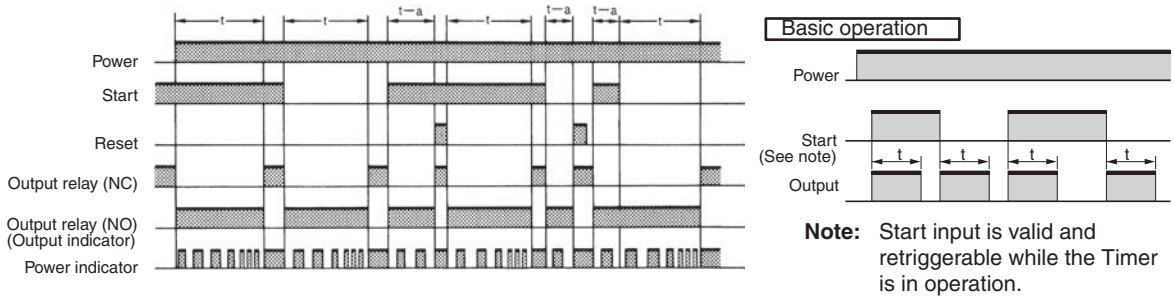

Operating mode	Timing chart
D: Signal OFF-delay	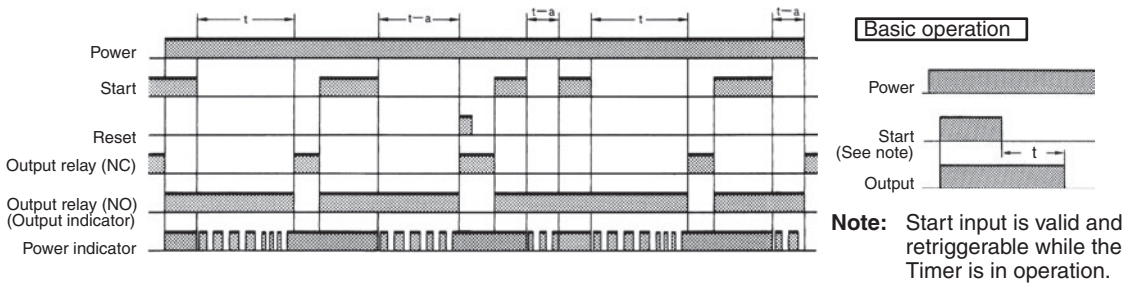
E: Interval	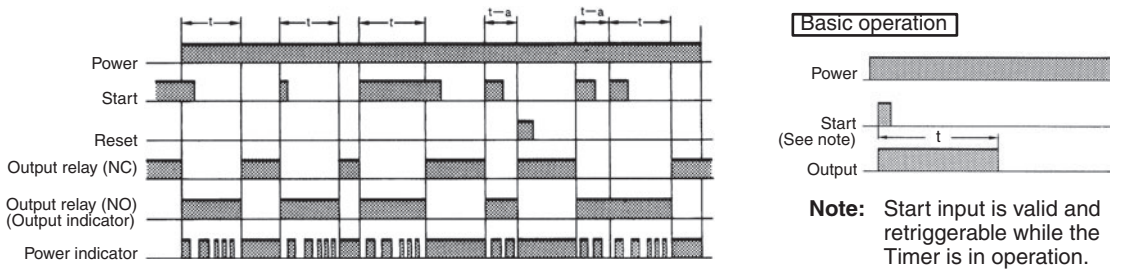
G: Signal ON/ OFF-delay	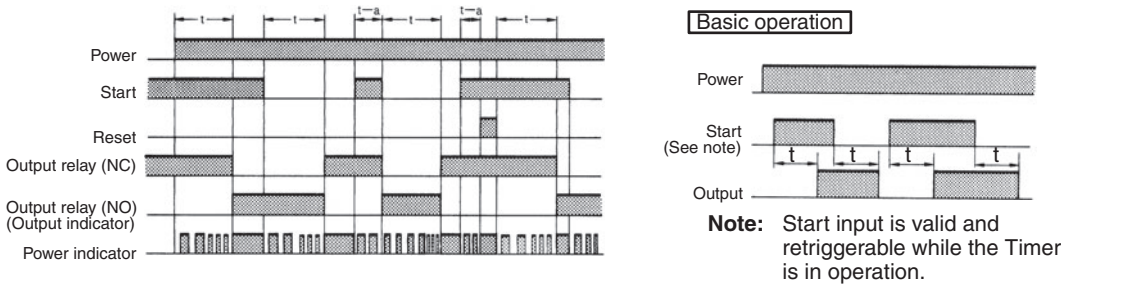
J: One-shot output	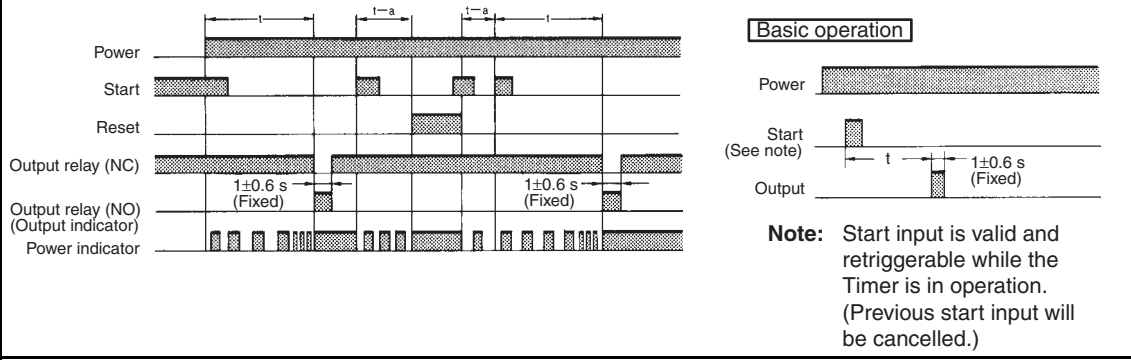

Gate Signal Input

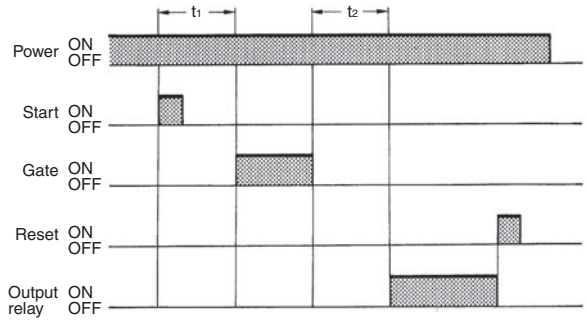

Note: 1. This timing chart indicates the gate input in operating mode A (ON-delay operation).
2. The set time is the sum of t_1 and t_2.
3. H3CR-AP model incorporates start input only.

H3CR-A8/-A8S

Operating mode	Timing chart
A: ON-delay	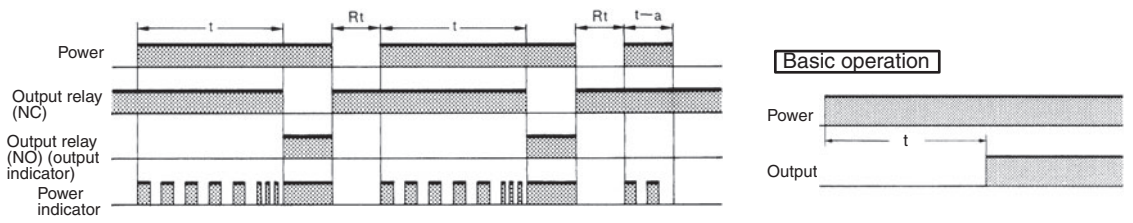
B2: Flicker ON start	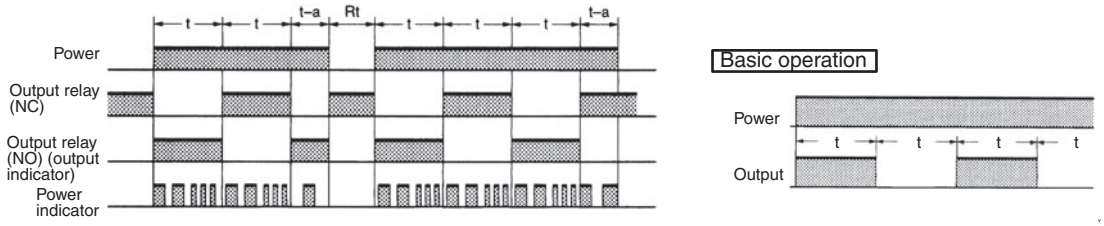
E: Interval	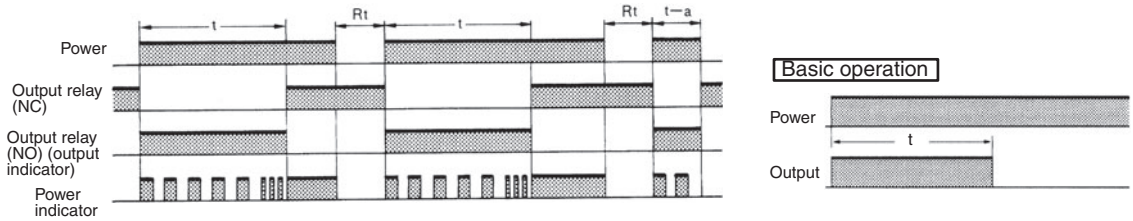
J: One-shot output	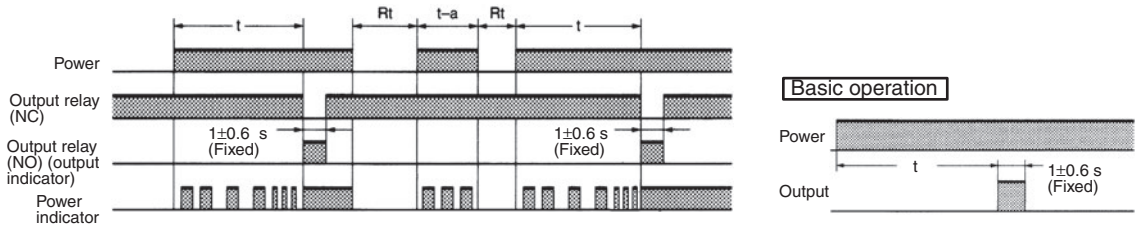

Note: 1. The minimum power-opening time (“Rt”) is 0.1 s.

2. The letter “t” in the timing charts stands for the set time and “t–a” means that the period is less than the time set.

H3CR-A8E

Operating mode	Timing chart
A: ON-delay	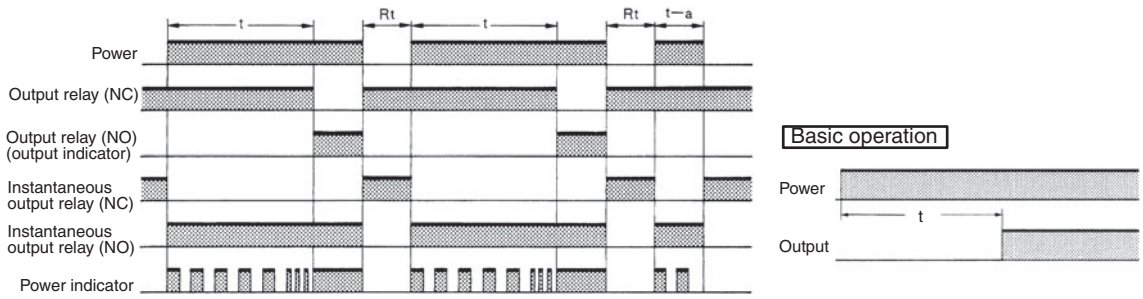
B2: Flicker ON start	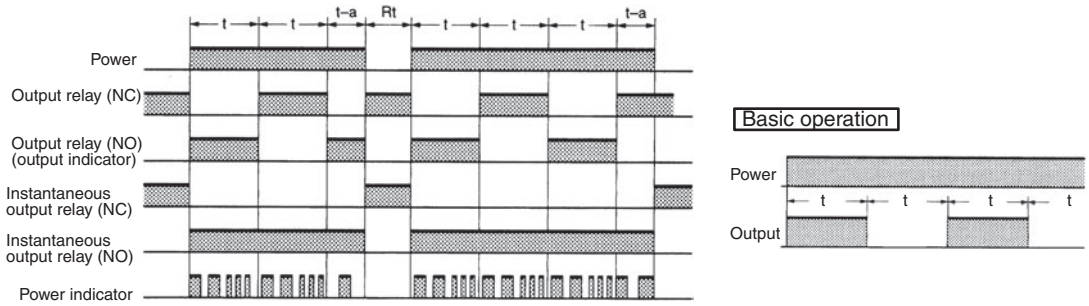
E: Interval	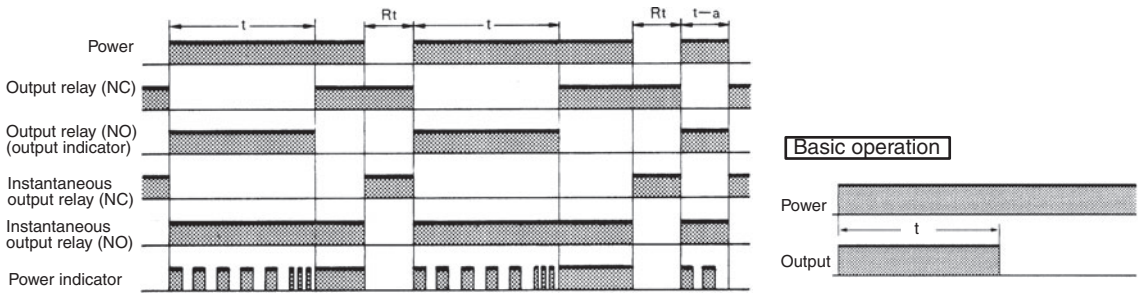
J: One-shot output	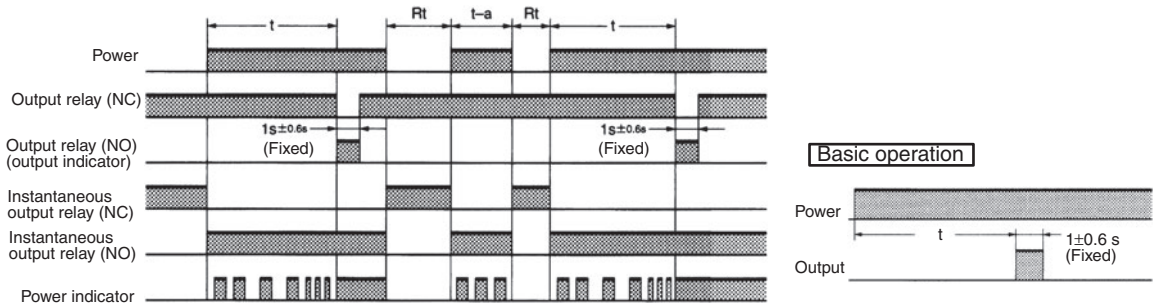

Note: 1. The minimum power-opening time ("Rt") is 0.1 s.
2. The letter "t" in the timing charts stands for the set time and "t–a" means that the period is less than the time set.

Nomenclature

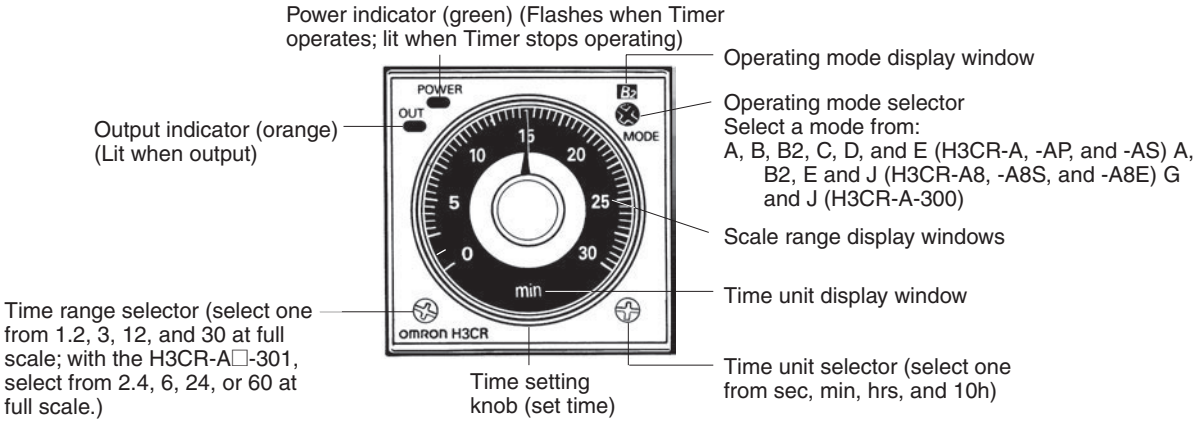

Dimensions

Note: All units are in millimeters unless otherwise indicated.

H3CR-A
H3CR-AP
H3CR-AS

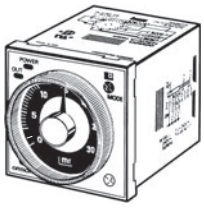

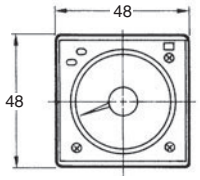

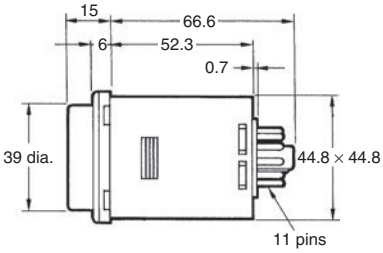

H3CR-A8
H3CR-A8S
H3CR-A8E

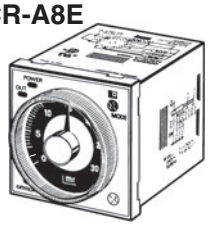

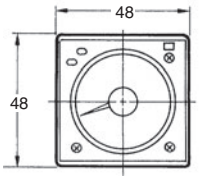

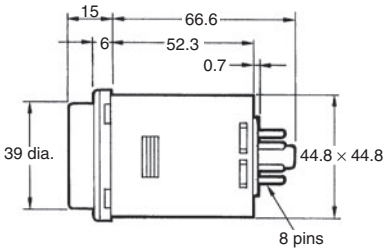

Dimensions with Set Ring

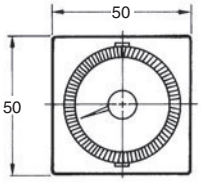

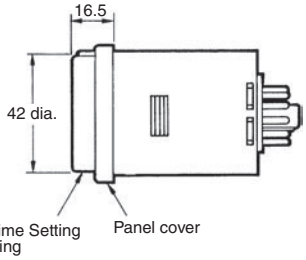

Dimensions with Front Connecting Socket
P2CF-08-□/P2CF-11-□

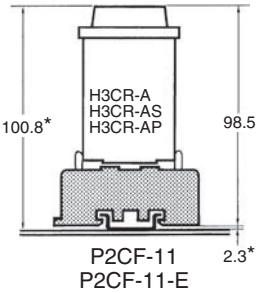

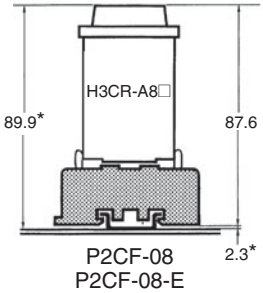

Dimensions with Back Connecting Socket
P3G-08/P3GA-11

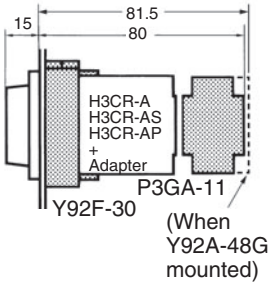

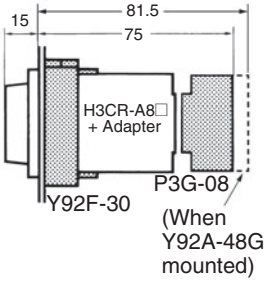

*These dimensions vary with the kind of DIN track (reference value).

Application Examples (H3CR-A)

A Mode: ON-delay

ON-delay operation (A mode) is a basic mode.

1. Power-ON Start/Power-OFF Reset

The Power-ON start/Power-OFF reset operation is a standard operating method.

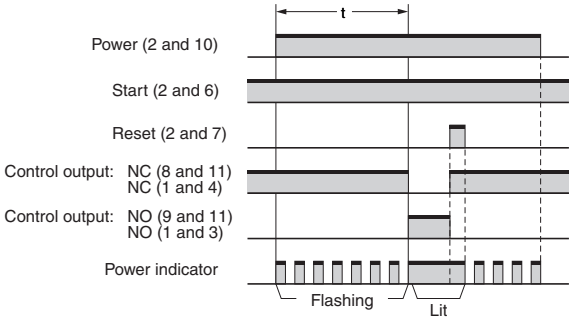

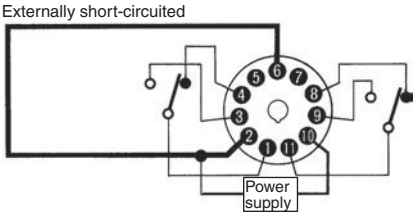

2. Signal Start/Signal Reset

The Signal start/Signal reset operation is useful for remote control of the Timer.

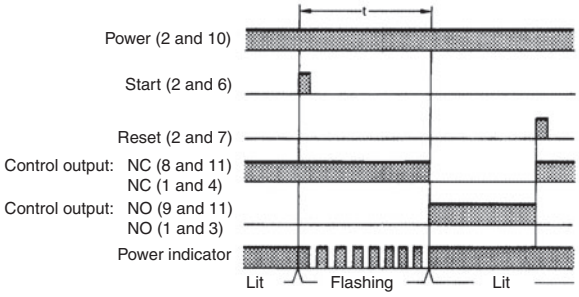

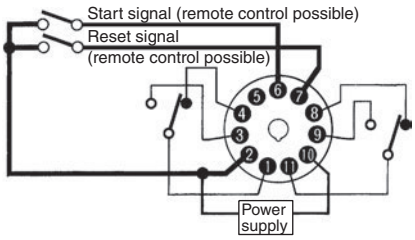

(Power continuously supplied)

3. Control of Integrated Time with Gate Signal

With a gate signal, the Power-ON start operation and Signal start operation can be controlled (the operation can be interrupted).

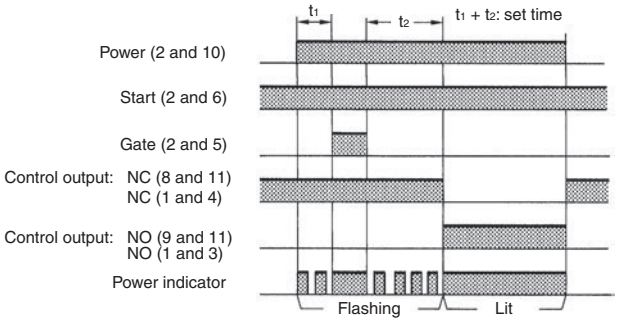

Gate signal (The operation is interrupted with the gate signal if the Timer detects an abnormal signal.)

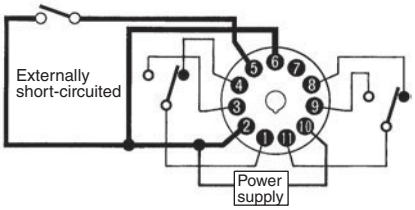

B/B2 Mode: Flicker

The flicker operation in the B and B2 modes can be effectively applied to lamp or buzzer (ON and OFF) alarms or the monitoring of an intermittent operation with a display.

1. Power-ON Start/Power-OFF Reset (in B Mode)

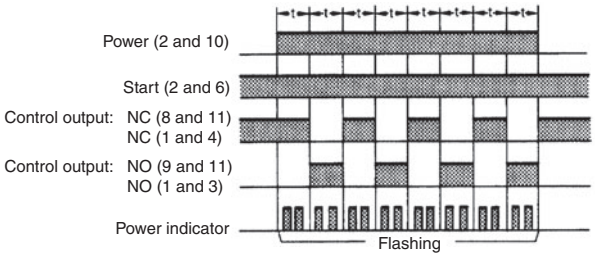

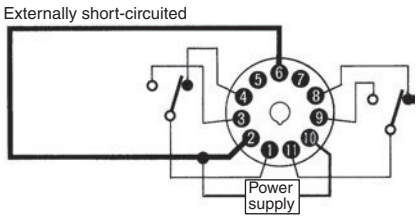

2. Signal Start/Signal Reset (in B Mode)

If there is an abnormal signal, flashing starts. When the abnormal condition is restored, a reset signal stops the display flashing.

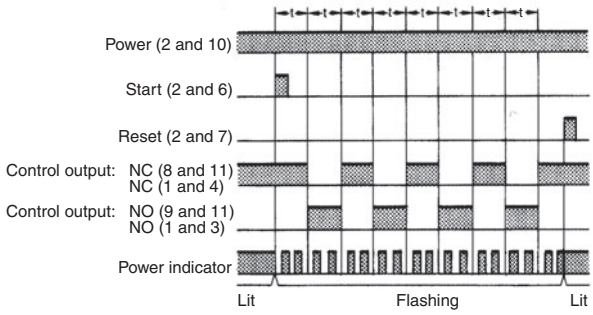

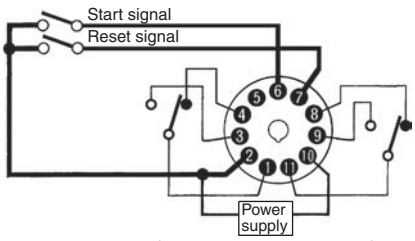

(Power continuously supplied)

C Mode: Signal ON/OFF-delay

The Signal ON-/OFF-delay operation (C mode) is useful for the control of distribution of products on a production line into boxes by the specified number or time.

1. Power-ON Start/Instantaneous Operation/ Time-limit Reset

A set of these functions is useful for the operation of a machine for a specified period when power is ON.

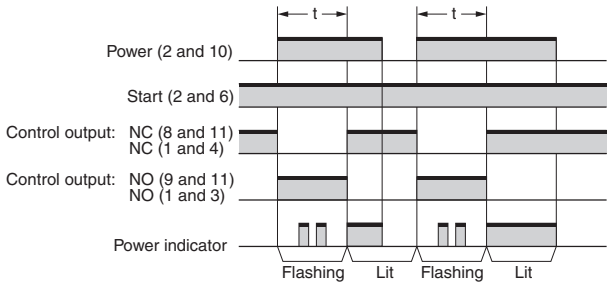

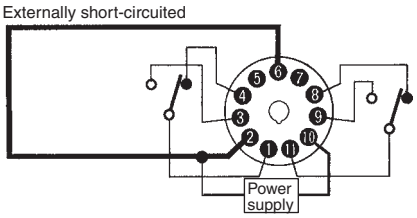

2. Signal-ON-OFF Start/Instantaneous Operation/Time-limit Reset

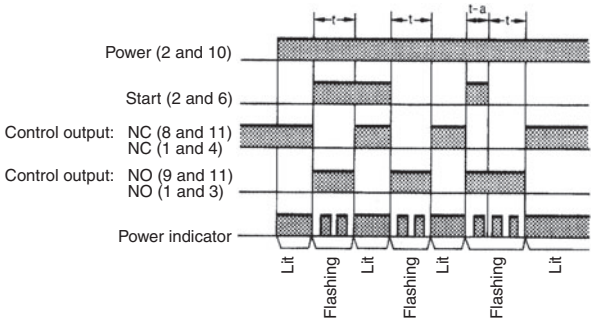

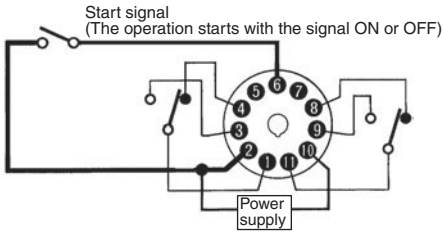

(Power continuously supplied)

D Mode: Signal OFF-delay

Signal OFF-delay operation (D mode) can be effectively used to keep a load operating for a certain period. For example, this function enables the cooling fan for a lamp or heater to operate for a certain period after the lamp or heater is switched OFF.

1. Power-ON Start/Instantaneous Operation/ Time-limit Reset

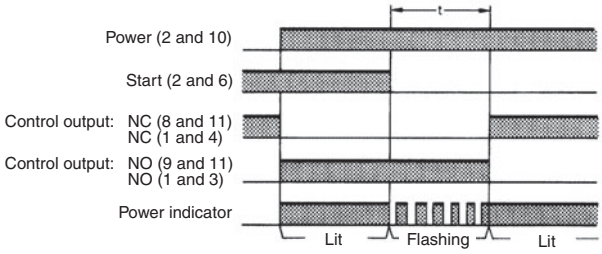

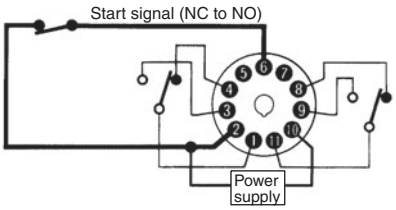

2. Signal Start/Instantaneous Operation/ Time-limit Reset

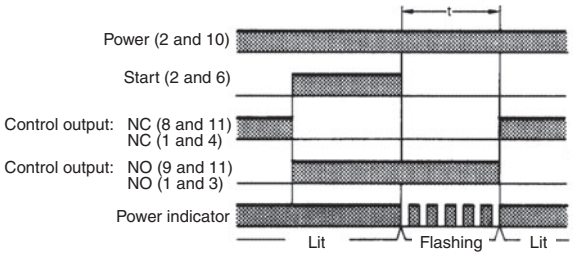

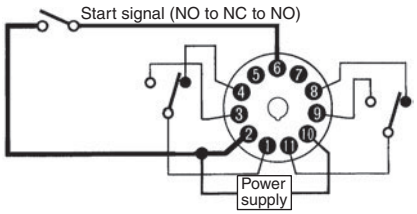

(Power continuously supplied)

E Mode: Interval

1. Power-ON Start/Instantaneous Operation/ Time-limit Reset

This function is useful for the operation of a machine for a specified period after power is ON.

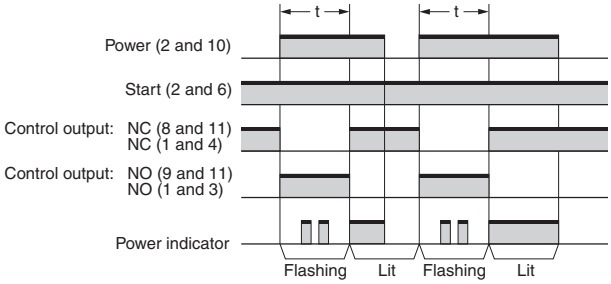

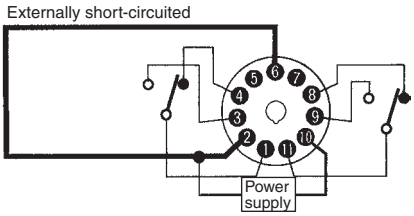

2. Signal Start/Instantaneous Operation/ Time-limit Reset

This function is useful for the repetitive control such as the filling of liquid for a specified period after each Signal start input.

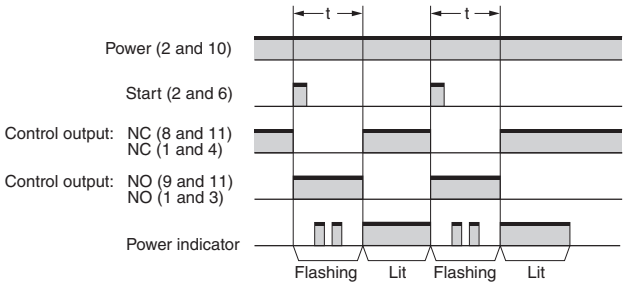

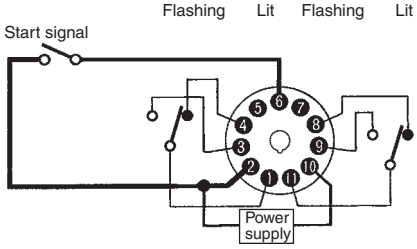

(Power continuously supplied)

Safety Precautions (H3CR-A)

Refer to *Safety Precautions for All Timers*.

Note: The following precautions apply to all H3CR-A models.

■ Power Supplies

For the power supply of an input device of the H3CR-A□/-A□S/-AP, use an isolating transformer with the primary and secondary windings mutually isolated and the secondary winding not grounded.

Correct

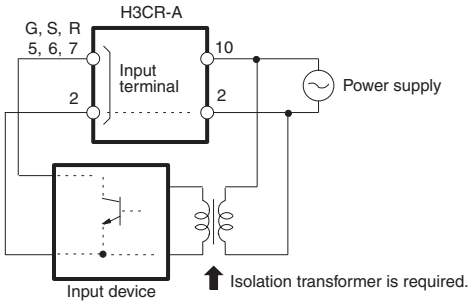

Incorrect

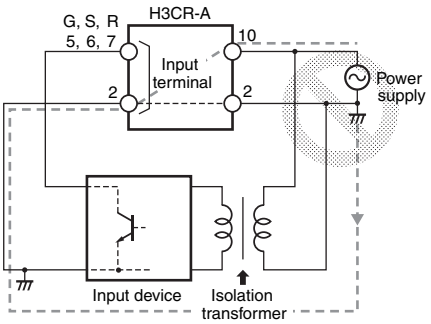

The H3CR-A□/-A□S/AP's power supply terminal 2 is a common terminal for input signals to the Timer. Do not disconnect the wires on terminal 2, otherwise the internal circuitry of the Timer will be damaged.

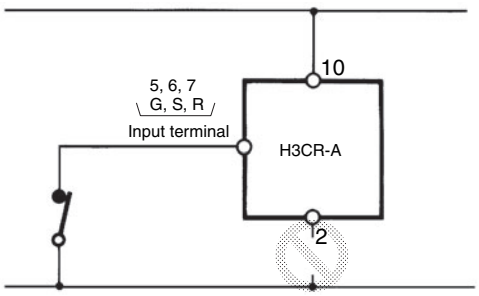

Make sure that the voltage is applied within the specified range, otherwise the internal elements of the Timer may be damaged.

■ Input/Output

Relationship between Input and Power Supply Circuits (except for H3CR-A8E)

The H3CR-A (except for H3CR-A8E) uses transformerless power supply. When connecting a relay or transistor as an external signal input device, pay attention to the following points to prevent short-circuiting due to a sneak current to the transformerless power supply. If a relay or transistor is connected to two or more Timers, the input terminals of those Timers must be wired properly so that they will not differ in phase, otherwise the terminals will be short-circuited to one another.

Incorrect

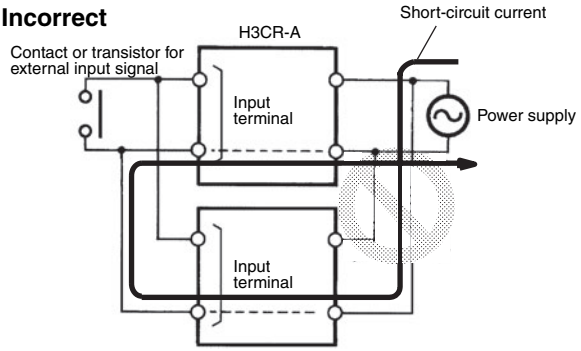

Correct

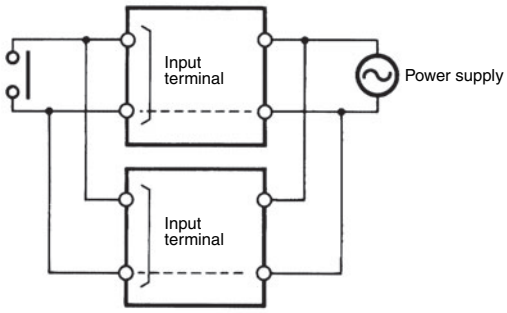

It is impossible to provide two independent power switches as shown below regardless of whether or not the Timers are different in phase.

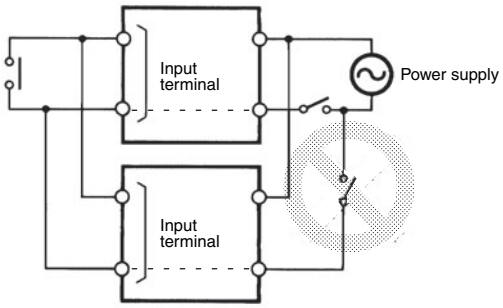

Relationship between Input and Power Supply Circuits (H3CR-A□/-A□S)

An appropriate input is applied to the input signal terminals of the H3CR-A□/-A□S when one of the input terminals is short-circuited with the common terminal (terminal 2) for the input signals. Never use terminal 10 as the common terminal for this purpose, otherwise the internal circuit of the Timer will be damaged.

Incorrect

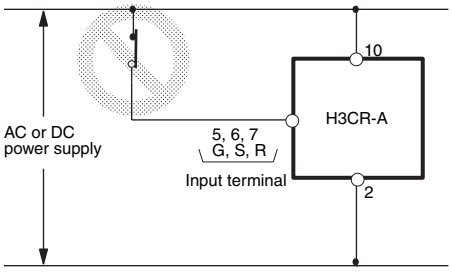

Correct

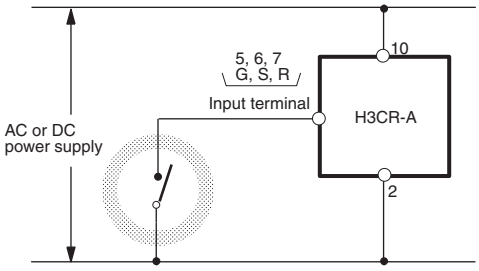

Do not connect a relay or any other load between input terminals, otherwise the internal circuit of the Timer will be damaged due to the high-tension voltage applied to the input terminals.

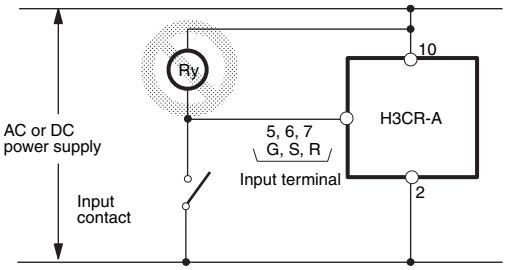

Relationship between Input and Power Supply Circuits (H3CR-AP)

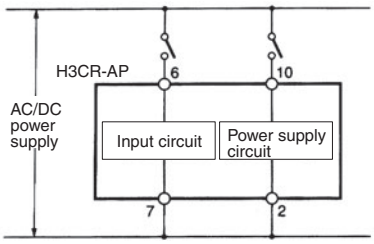

Since the input circuit and the power supply circuit are configured independently, the input circuit can be turned ON or OFF irrespective of the ON/OFF state of the power supply.
It must be noted that a voltage equivalent to the power supply voltage is applied to the input circuit.

If a relay or transistor is connected to two or more Timers, the input terminals of those Timers must be wired properly so that they will not be different in phase or the terminals will be short-circuited to one another (refer to the figures below).

Incorrect

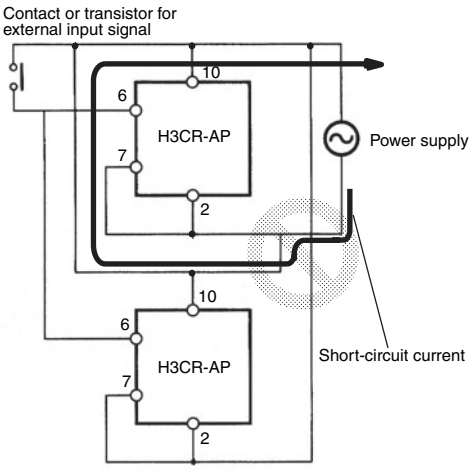

Correct

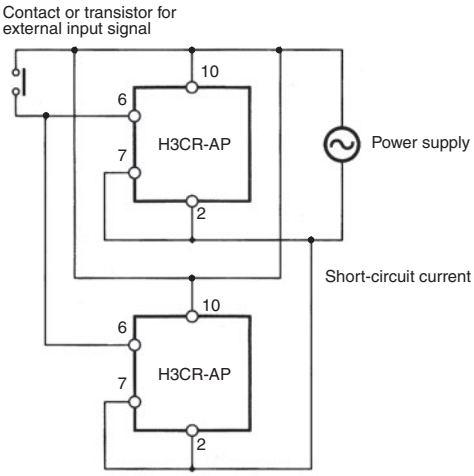

Common to All H3CR-A Models

With the H3CR-AP, input wires must be as short as possible. If the floating capacity of wires exceeds 1,200 pF (approx. 10 m for cables with 120 pF/m), the operation will be affected. Pay particular attention when using shielded cables.

The H3CR-A□S transistor output is isolated from the internal circuitry by a photocoupler. Therefore, either NPN or PNP output is possible.

ALL DIMENSIONS SHOWN ARE IN MILLIMETERS.
To convert millimeters into inches, multiply by 0.03937. To convert grams into ounces, multiply by 0.03527.

In the interest of product improvement, specifications are subject to change without notice.

Read and Understand This Catalog

Please read and understand this catalog before purchasing the products. Please consult your OMRON representative if you have any questions or comments.

Warranty and Limitations of Liability

WARRANTY

OMRON's exclusive warranty is that the products are free from defects in materials and workmanship for a period of one year (or other period if specified) from date of sale by OMRON.

OMRON MAKES NO WARRANTY OR REPRESENTATION, EXPRESS OR IMPLIED, REGARDING NON-INFRINGEMENT, MERCHANTABILITY, OR FITNESS FOR PARTICULAR PURPOSE OF THE PRODUCTS. ANY BUYER OR USER ACKNOWLEDGES THAT THE BUYER OR USER ALONE HAS DETERMINED THAT THE PRODUCTS WILL SUITABLY MEET THE REQUIREMENTS OF THEIR INTENDED USE. OMRON DISCLAIMS ALL OTHER WARRANTIES, EXPRESS OR IMPLIED.

LIMITATIONS OF LIABILITY

OMRON SHALL NOT BE RESPONSIBLE FOR SPECIAL, INDIRECT, OR CONSEQUENTIAL DAMAGES, LOSS OF PROFITS OR COMMERCIAL LOSS IN ANY WAY CONNECTED WITH THE PRODUCTS, WHETHER SUCH CLAIM IS BASED ON CONTRACT, WARRANTY, NEGLIGENCE, OR STRICT LIABILITY.

In no event shall the responsibility of OMRON for any act exceed the individual price of the product on which liability is asserted.

IN NO EVENT SHALL OMRON BE RESPONSIBLE FOR WARRANTY, REPAIR, OR OTHER CLAIMS REGARDING THE PRODUCTS UNLESS OMRON'S ANALYSIS CONFIRMS THAT THE PRODUCTS WERE PROPERLY HANDLED, STORED, INSTALLED, AND MAINTAINED AND NOT SUBJECT TO CONTAMINATION, ABUSE, MISUSE, OR INAPPROPRIATE MODIFICATION OR REPAIR.

Application Considerations

SUITABILITY FOR USE

OMRON shall not be responsible for conformity with any standards, codes, or regulations that apply to the combination of products in the customer's application or use of the products.

At the customer's request, OMRON will provide applicable third party certification documents identifying ratings and limitations of use that apply to the products. This information by itself is not sufficient for a complete determination of the suitability of the products in combination with the end product, machine, system, or other application or use.

The following are some examples of applications for which particular attention must be given. This is not intended to be an exhaustive list of all possible uses of the products, nor is it intended to imply that the uses listed may be suitable for the products:

- Outdoor use, uses involving potential chemical contamination or electrical interference, or conditions or uses not described in this catalog.
- Nuclear energy control systems, combustion systems, railroad systems, aviation systems, medical equipment, amusement machines, vehicles, safety equipment, and installations subject to separate industry or government regulations.
- Systems, machines, and equipment that could present a risk to life or property.

Please know and observe all prohibitions of use applicable to the products.

NEVER USE THE PRODUCTS FOR AN APPLICATION INVOLVING SERIOUS RISK TO LIFE OR PROPERTY WITHOUT ENSURING THAT THE SYSTEM AS A WHOLE HAS BEEN DESIGNED TO ADDRESS THE RISKS, AND THAT THE OMRON PRODUCTS ARE PROPERLY RATED AND INSTALLED FOR THE INTENDED USE WITHIN THE OVERALL EQUIPMENT OR SYSTEM.

PROGRAMMABLE PRODUCTS

OMRON shall not be responsible for the user's programming of a programmable product, or any consequence thereof.

Disclaimers

CHANGE IN SPECIFICATIONS

Product specifications and accessories may be changed at any time based on improvements and other reasons.

It is our practice to change model numbers when published ratings or features are changed, or when significant construction changes are made. However, some specifications of the products may be changed without any notice. When in doubt, special model numbers may be assigned to fix or establish key specifications for your application on your request. Please consult with your OMRON representative at any time to confirm actual specifications of purchased products.

DIMENSIONS AND WEIGHTS

Dimensions and weights are nominal and are not to be used for manufacturing purposes, even when tolerances are shown.

PERFORMANCE DATA

Performance data given in this catalog is provided as a guide for the user in determining suitability and does not constitute a warranty. It may represent the result of OMRON's test conditions, and the users must correlate it to actual application requirements. Actual performance is subject to the OMRON Warranty and Limitations of Liability.

ERRORS AND OMISSIONS

The information in this document has been carefully checked and is believed to be accurate; however, no responsibility is assumed for clerical, typographical, or proofreading errors, or omissions.

2010.12

In the interest of product improvement, specifications are subject to change without notice.

OMRON Corporation
Industrial Automation Company

http://www.ia.omron.com/

(c)Copyright OMRON Corporation 2010 All Right Reserved.