Switch Mode Power Supply (15/30/50/100/150/300/600-W Models)

S8FS-G

Superior Basic Performance That Ensures Reliability. Wide Range of Standards Certification and Greater Usability.

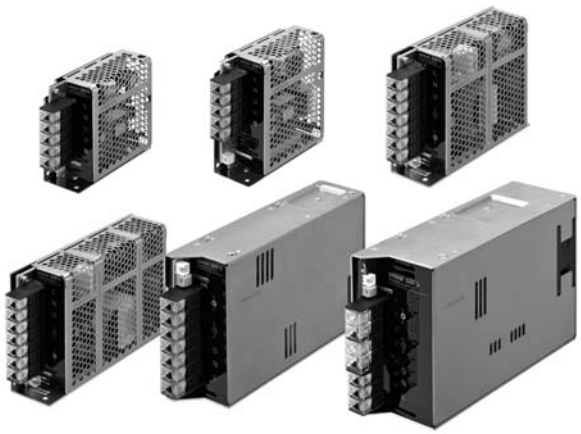

- Superior basic performance that ensures reliability
  Ambient temperatures up to 70°C, greater resistance to rusting with aluminum/stainless steel case, and applications at altitudes up to 3,000 m.
- Certification for Global Standards
  North America: UL 508 (Listing)✻, CSA C22.2
  Europe: Overvoltage Category III (EN 62477-1)
  EMI: Class B (EN 61204-3)
  No need for control circuit transformers for which the Machinery Directive is specified. (EN/IEC 61558-2-16)
  India BIS: IS 13252 (Part 1)✻
  ✻ Refer to pages 4 to 10 for certified models.
- Greater Usability
  The Terminal Block Cover prevents screws from dropping out and the Front Cover prevents ingress of foreign matter.

⚠ Refer to *Safety Precautions for All Power Supplies* and *Safety Precautions* on page 29.

Lineup

Output voltage (VDC)	Power rating						
	15 W	30 W	50 W	100 W	150 W	300 W	600 W
5 V	Yes	Yes	Yes	Yes	Yes	---	---
12 V	Yes	Yes	Yes	Yes	Yes	Yes	Yes
15 V	Yes	Yes	Yes	Yes	Yes	Yes	Yes
24 V	Yes	Yes	Yes	Yes	Yes	Yes	Yes
48 V	---	---	---	---	Yes	Yes	Yes

Model Number Structure

Model Number Legend

Note: Not all combinations are possible. Refer to *List of Models* in *Ordering Information*, below.

S8FS- G□□□ □□ □ □-□ □ □-□
1 2 3 4 5 6 7 8

1. Power Ratings
015: 15 W
030: 30 W
050: 50 W ✻1
100: 100 W ✻2
150: 150 W ✻3
300: 300 W
600: 600 W

2. Output voltage (VDC)
05: 5 V
12: 12 V
15: 15 V
24: 24 V
48: 48 V

3. Configuration
C: With cover/ Direct mounting
CD: With cover/ DIN Rail mounting

4. Option (1)
None: Screw terminal block
E: Connectors ✻4

5. Option (2) ✻5
None: None
W: Parallel operation

6. Option (3) ✻6
None: None
R: Remote control

7. Option (4) ✻7
None: None
H: Extended hold time

8. Safety Standards
None: For details, refer to *Safety Standards* of *Specifications* on pages 4 to 10
500: ✻8 Uncertified models by BIS Standards (Bureau of Indian Standards)

✻1. The output electric power is 40 W for products with an output voltage of 5 V.
✻2. The output electric power is 80 W for products with an output voltage of 5 V.
✻3. The output electric power is 105 W for products with an output voltage of 5 V.
✻4. Applicable only for 150 W or less and 24 V.
✻5. Applicable only for 600 W and 24 V.
✻6. Applicable only for 100 W or more and 24 V.
✻7. Applicable only for 300 W or more and 24 V.
✻8. S8FS-G10024C-500, S8FS-G10024CD-500, S8FS-G15024C-500, S8FS-G15024CD-500, S8FS-G30024C-500, S8FS-G30024CD-500, S8FS-G60024C-500, S8FS-G60024CD-500 only.

Ordering Information

List of Models

Note: For details on normal stock models, contact your nearest OMRON representative.

With Cover/DIN Rail Mounting

Power ratings	Input voltage	Output voltage (VDC)	Output current	Built-in fan	Model
15 W	100 to 240 VAC (Permissible range 85 to 264 VAC, 80 to 370 VDC) ✻4	5 V	3 A	None	**S8FS-G01505CD**
		12 V	1.3 A		**S8FS-G01512CD**
		15 V	1 A		**S8FS-G01515CD**
		24 V	0.65 A		**S8FS-G01524CD**
30 W		5 V	6 A		**S8FS-G03005CD**
		12 V	3 A		**S8FS-G03012CD**
		15 V	2.4 A		**S8FS-G03015CD**
		24 V	1.5 A		**S8FS-G03024CD**
50 W		5 V	8 A ✻1		**S8FS-G05005CD**
		12 V	4.3 A		**S8FS-G05012CD**
		15 V	3.5 A		**S8FS-G05015CD**
		24 V	2.2 A		**S8FS-G05024CD**
100 W		5 V	16 A ✻2		**S8FS-G10005CD**
		12 V	8.5 A		**S8FS-G10012CD**
		15 V	7 A		**S8FS-G10015CD**
		24 V	4.5 A		**S8FS-G10024CD**
					S8FS-G10024CD-500 ✻5
150 W		5 V	21 A ✻3		**S8FS-G15005CD**
		12 V	13 A		**S8FS-G15012CD**
		15 V	10 A		**S8FS-G15015CD**
		24 V	6.5 A		**S8FS-G15024CD**
					S8FS-G15024CD-500 ✻5
		48 V	3.3 A		**S8FS-G15048CD**
300 W	100 to 240 VAC (Permissible range 85 to 264 VAC, 120 to 370 VDC)	12 V	25 A	Yes	**S8FS-G30012CD**
		15 V	20 A		**S8FS-G30015CD**
		24 V	14 A		**S8FS-G30024CD**
					S8FS-G30024CD-500 ✻6
		48 V	7 A		**S8FS-G30048CD**
600 W	100 to 240 VAC (Permissible range 85 to 264 VAC, 120 to 350 VDC)	12 V	50 A		**S8FS-G60012CD**
		15 V	40 A		**S8FS-G60015CD**
		24 V	27 A		**S8FS-G60024CD**
					S8FS-G60024CD-500 ✻6
		48 V	13 A		**S8FS-G60048CD**

Note: Ask your OMRON representative for pricing information on optional models.
✻1. The output electric power is 40 W.
✻2. The output electric power is 80 W.
✻3. The output electric power is 105 W.
✻4. Applicable to products produced from May 2018.
✻5. Production started in July 2022.
✻6. Production started in parallel, since August 2022.

With Cover/DIN Rail Mounting (Extended hold time type)

Power ratings	Input voltage	Output voltage (VDC)	Output current	Built-in fan	Model
300 W	100 to 240 VAC (Permissible range 85 to 264 VAC, 120 to 370 VDC)	24 V	14 A	Yes	**S8FS-G30024CD-H**
600 W	100 to 240 VAC (Permissible range 85 to 264 VAC, 120 to 350 VDC)		27 A		**S8FS-G60024CD-H**

With Cover/Direct Mounting

Power ratings	Input voltage	Output voltage (VDC)	Output current	Built-in fan	Model
15 W	100 to 240 VAC (Permissible range 85 to 264 VAC, 80 to 370 VDC) ✻4	5 V	3 A	None	**S8FS-G01505C**
		12 V	1.3 A		**S8FS-G01512C**
		15 V	1 A		**S8FS-G01515C**
		24 V	0.65 A		**S8FS-G01524C**
30 W		5 V	6 A		**S8FS-G03005C**
		12 V	3 A		**S8FS-G03012C**
		15 V	2.4 A		**S8FS-G03015C**
		24 V	1.5 A		**S8FS-G03024C**
50 W		5 V	8 A ✻1		**S8FS-G05005C**
		12 V	4.3 A		**S8FS-G05012C**
		15 V	3.5 A		**S8FS-G05015C**
		24 V	2.2 A		**S8FS-G05024C**
100 W		5 V	16 A ✻2		**S8FS-G10005C**
		12 V	8.5 A		**S8FS-G10012C**
		15 V	7 A		**S8FS-G10015C**
		24 V	4.5 A		**S8FS-G10024C**
					S8FS-G10024C-500 ✻5
150 W		5 V	21 A ✻3		**S8FS-G15005C**
		12 V	13 A		**S8FS-G15012C**
		15 V	10 A		**S8FS-G15015C**
		24 V	6.5 A		**S8FS-G15024C**
					S8FS-G15024C-500 ✻5
		48 V	3.3 A		**S8FS-G15048C**
300 W	100 to 240 VAC (Permissible range 85 to 264 VAC, 120 to 370 VDC)	12 V	25 A	Yes	**S8FS-G30012C**
		15 V	20 A		**S8FS-G30015C**
		24 V	14 A		**S8FS-G30024C**
					S8FS-G30024C-500 ✻6
		48 V	7 A		**S8FS-G30048C**
600 W	100 to 240 VAC (Permissible range 85 to 264 VAC, 120 to 350 VDC)	12 V	50 A		**S8FS-G60012C**
		15 V	40 A		**S8FS-G60015C**
		24 V	27 A		**S8FS-G60024C**
					S8FS-G60024C-500 ✻6
		48 V	13 A		**S8FS-G60048C**

Note: 1. Ask your OMRON representative for pricing information on optional models.
2. Front-mounting is not possible.
To mount a Power Supply from the front, purchase a DIN Rail-mounting Power Supply and a Front-mounting Bracket (sold separately). Refer to page 27.

With Cover/Direct Mounting (Extended hold time type)

Power ratings	Input voltage	Output voltage (VDC)	Output current	Built-in fan	Model
300 W	100 to 240 VAC (Permissible range 85 to 264 VAC, 120 to 370 VDC)	24 V	14 A	Yes	**S8FS-G30024C-H**
600 W	100 to 240 VAC (Permissible range 85 to 264 VAC, 120 to 350 VDC)		27 A		**S8FS-G60024C-H**

With Cover/Direct Mounting (Connector type)

Power ratings	Input voltage	Output voltage (VDC)	Output current	Built-in fan	Model
15 W	100 to 240 VAC (Permissible range 85 to 264 VAC, 80 to 370 VDC) ✻4	24 V	0.65 A	None	**S8FS-G01524CE**
30 W			1.5 A		**S8FS-G03024CE**
50 W			2.2 A		**S8FS-G05024CE**
100 W			4.5 A		**S8FS-G10024CE**
150 W			6.5 A		**S8FS-G15024CE**

✻1. The output electric power is 40 W.
✻2. The output electric power is 80 W.
✻3. The output electric power is 105 W.
✻4. Applicable to products produced from May 2018.
✻5. Production started in July 2022.
✻6. Production started in parallel, since August 2022.

Specifications

Item		Power rating / Output voltage (VDC)	15 W			
			5 V	12 V	15 V	24 V
Efficiency ✱1		100 VAC input	80% typ.	84% typ.	84% typ.	85% typ.
		200 VAC input	80% typ.	84% typ.	84% typ.	86% typ.
		230 VAC input	80% typ.	84% typ.	84% typ.	86% typ.
Input	Voltage range ✱1		Single phase, 85 to 264 VAC, 80 to 370 VDC			
	Frequency ✱1		50/60 Hz (47 to 450 Hz)			
	Current ✱1	100 VAC input	0.32 A typ.			
		200 VAC input	0.2 A typ.			
	Power factor ✱1		---			
	Leakage current ✱1	100 VAC input	0.5 mA max.			
		200 VAC input	1 mA max.			
	Inrush current ✱1 (for a cold start at 25°C)	100 VAC input	14 A typ.			
		200 VAC input	28 A typ.			
Output	Rated Output Current		3 A	1.3 A	1 A	0.65 A
	Voltage adjustment range ✱1		–10% to 15% (with V.ADJ)			
	Ripple & Noise voltage ✱1	100 to 240 VAC input	40 mVp-p max.	40 mVp-p max.	40 mVp-p max.	60 mVp-p max.
	Input variation influence ✱1		0.5% max.			
	Load variation influence ✱1		1.0% max.			
	Temperature variation influence	100 to 240 VAC input	0.05%/°C max.			
	Startup time ✱1	100 VAC input	1,000 ms max.			
		200 VAC input	1,000 ms max.			
	Hold time ✱1	100 VAC input	15 ms typ.	14 ms typ.	15 ms typ.	15 ms typ.
		200 VAC input	75 ms typ.	70 ms typ.	75 ms typ.	70 ms typ.
Additional functions	Overload protection		Yes, automatic reset			
	Overvoltage protection ✱1		Yes, 120% or higher of rated output voltage, power shut off (shut off the input voltage and turn on the input again)			
	Overheat protection		No			
	Series operation		Yes (For up to two Power Supplies, external diodes are required.)			
	Parallel operation		No (However, backup operation is possible, external diodes are required.)			
	Remote sensing		No			
	Remote control		No			
	Output indicator		Yes (LED: Green)			
Insulation	Withstand voltage		3 kVAC for 1 min. (between all input terminals and output terminals) current cutoff 20 mA			
			2 kVAC for 1 min. (between all input terminals and PE terminals) current cutoff 20 mA			
			1 kVAC for 1 min. (between all output terminals and PE terminals) current cutoff 20 mA			
	Insulation resistance		100 MΩ min. (between all output terminals and all input terminals/PE terminals) at 500 VDC			
Environment	Ambient operating temperature		–20 to 70°C (Derating is required according to the temperature.) (with no condensation or icing)			
	Storage temperature		–25 to 75°C (with no condensation or icing)			
	Ambient operating humidity		90% max. (Storage humidity: 90% max.)			
	Vibration resistance		10 to 55 Hz, 4.5 G max., 0.375-mm half amplitude for 2 h each in X, Y, and Z directions			
	Shock resistance		150 m/s^2, 3 times each in ±X, ±Y, ±Z directions			
Reliability	MTBF		135,000 hrs min.			
	Life expectancy ✱1		10 years min.			
Construction	Dimensions (W×H×D)		Refer to *Dimensions* on page 19.			
	Weight		250 g			
	Cooling fan		No			
	Degree of protection		---			
Standards	Harmonic current emissions		Conforms to EN 61000-3-2			
	EMI ✱1	Conducted Emissions	Conforms to EN 61204-3 Class B, EN 55011 Class B			
		Radiated Emissions	Conforms to EN 61204-3 Class B, EN 55011 Class B			
	EMS		Conforms to EN 61204-3 high severity levels			
	Safety Standards ✱2		UL 508 (Listing, excluding models with connector option) UL 62368-1 (Recognition, OVCII [≤ 3,000 m], Pol2) CSA C22.2 No.107.1 (excluding models with connector option) CSA C22.2 No.62368-1 (excluding models with connector option) EN 62477-1 (OVCIII [≤ 2,000 m], OVCII [> 2,000 m and ≤ 3,000 m], Pol2) EN/IEC 62368-1 (OVCII [≤ 3,000 m], Pol2) Conforms to EN/IEC 61558-2-16 Conforms to PELV (EN/IEC 60204-1) RCM (EN61000-6-4)			
	Marine Standards		No			
	SEMI		Conforms to F47-0706 (200 VAC input)			

✱1. Refer to *Ratings, Characteristics, and Functions* on page 11.
✱2. Refer to *Standard Compliance* on page 11.

Item		Power rating / Output voltage (VDC)	30 W			
			5 V	12 V	15 V	24 V
Efficiency ✱1		100 VAC input	81% typ.	84% typ.	86% typ.	86% typ.
		200 VAC input	81% typ.	86% typ.	88% typ.	88% typ.
		230 VAC input	81% typ.	86% typ.	88% typ.	89% typ.
Input	Voltage range ✱1		Single phase, 85 to 264 VAC, 80 to 370 VDC			
	Frequency ✱1		50/60 Hz (47 to 450 Hz)			
	Current ✱1	100 VAC input	0.72 A typ.			
		200 VAC input	0.43 A typ.			
	Power factor ✱1		---			
	Leakage current ✱1	100 VAC input	0.5 mA max.			
		200 VAC input	1 mA max.			
	Inrush current ✱1 (for a cold start at 25°C)	100 VAC input	14 A typ.			
		200 VAC input	28 A typ.			
Output	Rated Output Current		6 A	3 A	2.4 A	1.5 A
	Voltage adjustment range ✱1		–10% to 15% (with V.ADJ)			
	Ripple & Noise voltage ✱1	100 to 240 VAC input	50 mVp-p max.	60 mVp-p max.	50 mVp-p max.	60 mVp-p max.
	Input variation influence ✱1		0.5% max.			
	Load variation influence ✱1		1.0% max.			
	Temperature variation influence	100 to 240 VAC input	0.05%/°C max.			
	Startup time ✱1	100 VAC input	1,000 ms max.			
		200 VAC input	1,000 ms max.			
	Hold time ✱1	100 VAC input	11 ms typ.	10 ms typ.	11 ms typ.	10 ms typ.
		200 VAC input	60 ms typ.	50 ms typ.	50 ms typ.	55 ms typ.
Additional functions	Overload protection		Yes, automatic reset			
	Overvoltage protection ✱1		Yes, 120% or higher of rated output voltage, power shut off (shut off the input voltage and turn on the input again)			
	Overheat protection		No			
	Series operation		Yes (For up to two Power Supplies, external diodes are required.)			
	Parallel operation		No (However, backup operation is possible, external diodes are required.)			
	Remote sensing		No			
	Remote control		No			
	Output indicator		Yes (LED: Green)			
Insulation	Withstand voltage		3 kVAC for 1 min. (between all input terminals and output terminals) current cutoff 20 mA			
			2 kVAC for 1 min. (between all input terminals and PE terminals) current cutoff 20 mA			
			1 kVAC for 1 min. (between all output terminals and PE terminals) current cutoff 20 mA			
	Insulation resistance		100 MΩ min. (between all output terminals and all input terminals/PE terminals) at 500 VDC			
Environment	Ambient operating temperature		–20 to 70°C (Derating is required according to the temperature.) (with no condensation or icing)			
	Storage temperature		–25 to 75°C (with no condensation or icing)			
	Ambient operating humidity		90% max. (Storage humidity: 90% max.)			
	Vibration resistance		10 to 55 Hz, 4.5 G max., 0.375-mm half amplitude for 2 h each in X, Y, and Z directions			
	Shock resistance		150 m/s^2, 3 times each in ±X, ±Y, ±Z directions			
Reliability	MTBF		135,000 hrs min.			
	Life expectancy ✱1		10 years min.			
Construction	Dimensions (W×H×D)		Refer to *Dimensions* on page 19.			
	Weight		250 g			
	Cooling fan		No			
	Degree of protection		---			
Standards	Harmonic current emissions		Conforms to EN 61000-3-2			
	EMI ✱1	Conducted Emissions	Conforms to EN 61204-3 Class B, EN 55011 Class B			
		Radiated Emissions	Conforms to EN 61204-3 Class B, EN 55011 Class B			
	EMS		Conforms to EN 61204-3 high severity levels			
	Safety Standards ✱2		UL 508 (Listing, excluding models with connector option) UL 62368-1 (Recognition, OVCII [≤ 3,000 m], Pol2) CSA C22.2 No.107.1 (excluding models with connector option) CSA C22.2 No.62368-1 (excluding models with connector option) EN 62477-1 (OVCIII [≤ 2,000 m], OVCII [> 2,000 m and ≤ 3,000 m], Pol2) EN/IEC 62368-1 (OVCII [≤ 3,000 m], Pol2) Conforms to EN/IEC 61558-2-16 Conforms to PELV (EN/IEC 60204-1) RCM (EN61000-6-4)			
	Marine Standards		No			
	SEMI		Conforms to F47-0706 (200 VAC input)			

✱1. Refer to *Ratings, Characteristics, and Functions* on page 11.
✱2. Refer to *Standard Compliance* on page 11.

Item		Power rating / Output voltage (VDC)	50 W			
			5 V	12 V	15 V	24 V
Efficiency ✱1		100 VAC input	81% typ.	84% typ.	86% typ.	86% typ.
		200 VAC input	82% typ.	86% typ.	88% typ.	89% typ.
		230 VAC input	82% typ.	86% typ.	88% typ.	89% typ.
Input	Voltage range ✱1		Single phase, 85 to 264 VAC, 80 to 370 VDC			
	Frequency ✱1		50/60 Hz (47 to 450 Hz)			
	Current ✱1	100 VAC input	1.1 A typ.			
		200 VAC input	0.62 A typ.			
	Power factor ✱1		---			
	Leakage current ✱1	100 VAC input	0.5 mA max.			
		200 VAC input	1 mA max.			
	Inrush current ✱1 (for a cold start at 25°C)	100 VAC input	14 A typ.			
		200 VAC input	28 A typ.			
Output	Rated Output Current		8 A	4.3 A	3.5 A	2.2A
	Voltage adjustment range ✱1		–10% to 15% (with V.ADJ)			
	Ripple & Noise voltage ✱1	100 to 240 VAC input	40 mVp-p max.	40 mVp-p max.	40 mVp-p max.	60 mVp-p max.
	Input variation influence ✱1		0.5% max.			
	Load variation influence ✱1		1.0% max.			
	Temperature variation influence	100 to 240 VAC input	0.05%/°C max.			
	Startup time ✱1	100 VAC input	1,000 ms max.			
		200 VAC input	1,000 ms max.			
	Hold time ✱1	100 VAC input	14 ms typ.	11 ms typ.	10 ms typ.	10 ms typ.
		200 VAC input	75 ms typ.	60 ms typ.	60 ms typ.	55 ms typ.
Additional functions	Overload protection		Yes, automatic reset			
	Overvoltage protection ✱1		Yes, 120% or higher of rated output voltage, power shut off (shut off the input voltage and turn on the input again)			
	Overheat protection		No			
	Series operation		Yes (For up to two Power Supplies, external diodes are required.)			
	Parallel operation		No (However, backup operation is possible, external diodes are required.)			
	Remote sensing		No			
	Remote control		No			
	Output indicator		Yes (LED: Green)			
Insulation	Withstand voltage		3 kVAC for 1 min. (between all input terminals and output terminals) current cutoff 20 mA			
			2 kVAC for 1 min. (between all input terminals and PE terminals) current cutoff 20 mA			
			1 kVAC for 1 min. (between all output terminals and PE terminals) current cutoff 20 mA			
			500 VAC for 1 min. (between all output terminals and RC terminals) current cutoff 20 mA			
	Insulation resistance		100 MΩ min. (between all output terminals and all input terminals/PE terminals) at 500 VDC			
Environment	Ambient operating temperature		–20 to 70°C (Derating is required according to the temperature.) (with no condensation or icing)			
	Storage temperature		–25 to 75°C (with no condensation or icing)			
	Ambient operating humidity		90% max. (Storage humidity: 90% max.)			
	Vibration resistance		10 to 55 Hz, 4.5 G max., 0.375-mm half amplitude for 2 h each in X, Y, and Z directions			
	Shock resistance		150 m/s^2, 3 times each in ±X, ±Y, ±Z directions			
Reliability	MTBF		135,000 hrs min.			
	Life expectancy ✱1		10 years min.			
Construction	Dimensions (W×H×D)		Refer to *Dimensions* on page 20.			
	Weight		300 g			
	Cooling fan		No			
	Degree of protection		---			
Standards	Harmonic current emissions		Conforms to EN 61000-3-2			
	EMI ✱1	Conducted Emissions	Conforms to EN 61204-3 Class B, EN 55011 Class B			
		Radiated Emissions	Conforms to EN 61204-3 Class B, EN 55011 Class B			
	EMS		Conforms to EN 61204-3 high severity levels			
	Safety Standards ✱2		UL 508 (Listing, excluding models with connector option) UL 62368-1 (Recognition, OVCII [≤ 3,000 m], Pol2) CSA C22.2 No.107.1 (excluding models with connector option) CSA C22.2 No.62368-1 (excluding models with connector option) EN 62477-1 (OVCIII [≤ 2,000 m], OVCII [> 2,000 m and ≤ 3,000 m], Pol2) EN/IEC 62368-1 (OVCII [≤ 3,000 m], Pol2) Conforms to EN/IEC 61558-2-16 Conforms to PELV (EN/IEC 60204-1) RCM (EN61000-6-4)			
	Marine Standards		No			
	SEMI		Conforms to F47-0706 (200 VAC input)			

✱1. Refer to *Ratings, Characteristics, and Functions* on page 11.
✱2. Refer to *Standard Compliance* on page 11.

Item		Power rating / Output voltage (VDC)	100 W			
			5 V	12 V	15 V	24 V
Efficiency ✱1		100 VAC input	79% typ.	84% typ.	85% typ.	87% typ.
		200 VAC input	81% typ.	86% typ.	87% typ.	89% typ.
		230 VAC input	81% typ.	86% typ.	87% typ.	89% typ.
Input	Voltage range ✱1		Single phase, 85 to 264 VAC, 80 to 370 VDC			
	Frequency ✱1		50/60 Hz (47 to 450 Hz)			
	Current ✱1	100 VAC input	2.1 A typ.			
		200 VAC input	1.2 A typ.			
	Power factor ✱1		---			
	Leakage current ✱1	100 VAC input	0.5 mA max.			
		200 VAC input	1 mA max.			
	Inrush current ✱1 (for a cold start at 25°C)	100 VAC input	14 A typ.			
		200 VAC input	28 A typ.			
Output	Rated Output Current		16 A	8.5 A	7 A	4.5 A
	Voltage adjustment range ✱1		−10% to 15% (with V.ADJ)			
	Ripple & Noise voltage ✱1	100 to 240 VAC input	70 mVp-p max.	90 mVp-p max.	100 mVp-p max.	80 mVp-p max.
	Input variation influence ✱1		0.5% max.			
	Load variation influence ✱1		1.0% max.			
	Temperature variation influence	100 to 240 VAC input	0.05%/°C max.			
	Startup time ✱1	100 VAC input	1,000 ms max.			
		200 VAC input	1,000 ms max.			
	Hold time ✱1	100 VAC input	12 ms typ.	11 ms typ.	11 ms typ.	10 ms typ.
		200 VAC input	70 ms typ.	55 ms typ.	55 ms typ.	55 ms typ.
Additional functions	Overload protection		Yes, automatic reset			
	Overvoltage protection ✱1		Yes, 120% or higher of rated output voltage, power shut off (shut off the input voltage and turn on the input again)			
	Overheat protection		No			
	Series operation		Yes (For up to two Power Supplies, external diodes are required.)			
	Parallel operation		No (However, backup operation is possible, external diodes are required.)			
	Remote sensing		No			
	Remote control		Yes (Only for models with remote control option)			
	Output indicator		Yes (LED: Green)			
Insulation	Withstand voltage		3 kVAC for 1 min. (between all input terminals and output terminals) current cutoff 20 mA			
			2 kVAC for 1 min. (between all input terminals and PE terminals) current cutoff 20 mA			
			1 kVAC for 1 min. (between all output terminals and PE terminals) current cutoff 20 mA			
			Only Remote control 500 VAC for 1 min. (between all output terminals and RC terminals) current cutoff 20 mA			
	Insulation resistance		100 MΩ min. (between all output terminals and all input terminals/PE terminals) at 500 VDC			
Environment	Ambient operating temperature		−20 to 70°C (Derating is required according to the temperature. Refer to Engineering Data) (with no condensation or icing)			
	Storage temperature		−25 to 75°C (with no condensation or icing)			
	Ambient operating humidity		90% max. (Storage humidity: 90% max.)			
	Vibration resistance		10 to 55 Hz, 4.5 G max., 0.375-mm half amplitude for 2 h each in X, Y, and Z directions			
	Shock resistance		150 m/s^2, 3 times each in ±X, ±Y, ±Z directions			
Reliability	MTBF		135,000 hrs min.			
	Life expectancy ✱1		10 years min.			
Construction	Dimensions (W×H×D)		Refer to *Dimensions* on page 21.			
	Weight		400 g			
	Cooling fan		No			
	Degree of protection		---			
Standards	Harmonic current emissions		Conforms to EN 61000-3-2			
	EMI ✱1	Conducted Emissions	Conforms to EN 61204-3 Class B, EN 55011 Class B			
		Radiated Emissions	Conforms to EN 61204-3 Class B, EN 55011 Class B			
	EMS		Conforms to EN 61204-3 high severity levels			
	Safety Standards ✱2		UL 508 (Listing, excluding models with connector option or remote control option) UL 508 (Recognition, models with remote control option) UL 62368-1 (Recognition, OVCII [≤ 3,000 m], Pol2) CSA C22.2 No.107.1 (excluding models with connector option or remote control option) CSA C22.2 No.62368-1 (excluding models with connector option or remote control option) EN 62477-1 (OVCIII [≤ 2,000 m], OVCII [> 2,000 m and ≤ 3,000 m], Pol2) EN/IEC 62368-1 (OVCII [≤ 3,000 m], Pol2) Conforms to EN/IEC 61558-2-16 Conforms to PELV (EN/IEC 60204-1) RCM (EN61000-6-4)			
	Marine Standards		No			
	SEMI		Conforms to F47-0706 (200 VAC input)			

✱1. Refer to *Ratings, Characteristics, and Functions* on page 11.
✱2. Refer to *Standard Compliance* on page 11.

Item		Power rating / Output voltage (VDC)	150 W				
			5 V	12 V	15 V	24 V	48 V
Efficiency ✻1		100 VAC input	78% typ.	84% typ.	85% typ.	87% typ.	85% typ.
		200 VAC input	81% typ.	87% typ.	88% typ.	89% typ.	88% typ.
		230 VAC input	81% typ.	87% typ.	88% typ.	90% typ.	88% typ.
Input	Voltage range ✻1		Single phase, 85 to 264 VAC, 80 to 370 VDC				
	Frequency ✻1		50 /60 Hz (47 to 450 Hz)				
	Current ✻1	100 VAC input	3 A typ.				
		200 VAC input	1.8 A typ.				
	Power factor ✻1		---				
	Leakage current ✻1	100 VAC input	0.5 mA max.				
		200 VAC input	1 mA max.				
	Inrush current ✻1 (for a cold start at 25°C)	100 VAC input	14 A typ.				
		200 VAC input	28 A typ.				
Output	Rated Output Current		21 A	13 A	10 A	6.5 A	3.3 A
	Voltage adjustment range ✻1		−10% to 15% (with V.ADJ)				
	Ripple & Noise voltage ✻1	100 to 240 VAC input	100 mVp-p max.	110 mVp-p max.	80 mVp-p max.	110 mVp-p max.	120 mVp-p max.
	Input variation influence ✻1		0.5% max.				
	Load variation influence ✻1		1.0% max.				
	Temperature variation influence	100 to 240 VAC input	0.05%/°C max.				
	Startup time ✻1	100 VAC input	1,000 ms max.				
		200 VAC input	1,000 ms max.				
	Hold time ✻1	100 VAC input	14 ms typ.	10 ms typ.	10 ms typ.	10 ms typ.	11 ms typ.
		200 VAC input	80 ms typ.	55 ms typ.	55 ms typ.	55 ms typ.	55 ms typ.
Additional functions	Overload protection		Yes, automatic reset				
	Overvoltage protection ✻1		Yes, 120% or higher of rated output voltage, power shut off (shut off the input voltage and turn on the input again)				
	Overheat protection		No				
	Series operation		Yes (For up to two Power Supplies, external diodes are required.)				
	Parallel operation		No (However, backup operation is possible, external diodes are required.)				
	Remote sensing		No				
	Remote control		Yes (Only for models with remote control option)				
	Output indicator		Yes (LED: Green)				
Insulation	Withstand voltage		3 kVAC for 1 min.(between all input terminals and output terminals) current cutoff 20 mA				
			2 kVAC for 1 min.(between all input terminals and PE terminals) current cutoff 20 mA				
			1 kVAC for 1 min.(between all output terminals and PE terminals) current cutoff 20 mA				
			Only Remote control 500 VAC for 1 min.(between all output terminals and RC terminals) current cutoff 20 mA				
	Insulation resistance		100 MΩ min.(between all output terminals and all input terminals/PE terminals) at 500 VDC				
Environment	Ambient operating temperature		−20 to 70°C (Derating is required according to the temperature. Refer to Engineering Data) (with no condensation or icing)				
	Storage temperature		−25 to 75°C (with no condensation or icing)				
	Ambient operating humidity		90% max. (Storage humidity: 90% max.)				
	Vibration resistance		10 to 55 Hz, 4.5 G max., 0.375-mm half amplitude for 2 h each in X, Y, and Z directions				
	Shock resistance		150 m/s^2, 3 times each in ±X, ±Y, ±Z directions				
Reliability	MTBF		135,000 hrs min.				
	Life expectancy ✻1		10 years min.				
Construction	Dimensions (W×H×D)		Refer to *Dimensions* on page 23.				
	Weight		500 g				
	Cooling fan		No				
	Degree of protection		---				
Standards	Harmonic current emissions		Conforms to EN 61000-3-2 (Applicable at 80% or less of the rated load.)				
	EMI ✻1	Conducted Emissions	Conforms to EN 61204-3 Class B, EN 55011 Class B				
		Radiated Emissions	Conforms to EN 61204-3 Class B, EN 55011 Class B				
	EMS		Conforms to EN 61204-3 high severity levels				
	Safety Standards ✻2		UL 508 (Listing, excluding models with connector option or remote control option) UL 508 (Recognition, models with remote control option) UL 62368-1 (Recognition, OVCII [≤ 3,000 m], Pol2) CSA C22.2 No.107.1 (excluding models with connector option or remote control option) CSA C22.2 No.62368-1 (excluding models with connector option or remote control option) EN 62477-1 (OVCIII [≤ 2,000 m], OVCII [> 2,000 m and ≤ 3,000 m], Pol2) EN/IEC 62368-1 (OVCII [≤ 3,000 m], Pol2) Conforms to EN/IEC 61558-2-16 Conforms to PELV (EN/IEC 60204-1) RCM (EN61000-6-4) BIS: IS 13252 (Part1) ✻3 (Output voltage 24 V type only. However, excluding S8FS-G15024C-500 and S8FS-G15024CD-500.)				
	Marine Standards		No				
	SEMI		Conforms to F47-0706 (200 VAC input)				

✻1. Refer to *Ratings, Characteristics, and Functions* on page 11.
✻2. Refer to *Standard Compliance* on page 11.
✻3. This BIS Standard is an Indian standard that has been in effect for this product since April 2021, and certification has been acquired for some models to enable individual product export to India. For details, refer to *List of Models with Bureau of Indian Standards (BIS) Certification* on page 11.

Item		Power rating / Output voltage (VDC)	300 W			
			12 V	15 V	24 V	48 V
Efficiency ✱1		100 VAC input	81% typ.	81% typ.	82% typ.	82% typ.
		200 VAC input	85% typ.	85% typ.	87% typ.	87% typ.
		230 VAC input	85% typ.	86% typ.	87% typ.	87% typ.
Input	Voltage range ✱1		Single phase, 85 to 264 VAC, 120 to 370 VDC			
	Frequency ✱1		50/60 Hz (47 to 63 Hz)			
	Current ✱1	100 VAC input	4.2 A typ.			
		200 VAC input	2.1 A typ.			
	Power factor ✱1		0.9 min.			
	Leakage current ✱1	100 VAC input	0.5 mA max.			
		200 VAC input	1 mA max.			
	Inrush current ✱1 (for a cold start at 25°C)	100 VAC input	14 A typ.			
		200 VAC input	28 A typ.			
Output	Rated Output Current		25 A	20 A	14 A	7 A
	Voltage adjustment range ✱1		–10% to 15% (with V.ADJ)			
	Ripple & Noise voltage ✱1	100 to 240 VAC input	140 mVp-p max.	270 mVp-p max.	150 mVp-p max.	330 mVp-p max.
	Input variation influence ✱1		0.5% max.			
	Load variation influence ✱1		1.0% max.			
	Temperature variation influence	100 to 240 VAC input	0.05%/°C max.			
	Startup time ✱1	100 VAC input	1,000 ms max.			
		200 VAC input	1,000 ms max.			
	Hold time ✱1	100 VAC input	30 ms typ.	30 ms typ.	30 ms typ. 40 ms typ. (Extended hold time type)	30 ms typ.
		200 VAC input	30 ms typ.	25 ms typ.	30 ms typ. 40 ms typ. (Extended hold time type)	30 ms typ.
Additional functions	Overload protection		Yes, automatic reset			
	Overvoltage protection ✱1		Yes, 120% or higher of rated output voltage, power shut off (shut off the input voltage and turn on the input again)			
	Overheat protection		Yes, power shut off (shut off the input voltage and turn on the input again)			
	Series operation		Yes (For up to two Power Supplies, external diodes are required.)			
	Parallel operation		No (However, backup operation is possible, external diodes are required.)			
	Remote sensing		No			
	Remote control		Yes (Only for models with remote control option)			
	Output indicator		Yes (LED: Green)			
Insulation	Withstand voltage		3 kVAC for 1 min. (between all input terminals and output terminals) current cutoff 20 mA			
			2 kVAC for 1 min. (between all input terminals and PE terminals) current cutoff 20 mA			
			1 kVAC for 1 min. (between all output terminals and PE terminals) current cutoff 20 mA			
			Only Remote control 500 VAC for 1 min. (between all output terminals and RC terminals) current cutoff 20 mA			
	Insulation resistance		100 MΩ min. (between all output terminals and all input terminals/PE terminals) at 500 VDC			
Environment	Ambient operating temperature		–20 to 70°C (Derating is required according to the temperature.) (with no condensation or icing)			
	Storage temperature		–25 to 75°C (with no condensation or icing)			
	Ambient operating humidity		90% max. (Storage humidity: 90% max.)			
	Vibration resistance		10 to 55 Hz, 4.5 G max., 0.375-mm half amplitude for 2 h each in X, Y, and Z directions			
	Shock resistance		150 m/s^2, 3 times each in ±X, ±Y, ±Z directions			
Reliability	MTBF		135,000 hrs min.			
	Life expectancy ✱1		10 years min.			
Construction	Dimensions (W×H×D)		Refer to *Dimensions* on page 25			
	Weight		700 g			
	Cooling fan		Yes			
	Degree of protection		---			
Standards	Harmonic current emissions		Conforms to EN 61000-3-2			
	EMI ✱1	Conducted Emissions	Conforms to EN 61204-3 Class B, EN 55011 Class B			
		Radiated Emissions	Conforms to EN 61204-3 Class B, EN 55011 Class B			
	EMS		Conforms to EN 61204-3 high severity levels			
	Safety Standards ✱2		UL 508 (Listing, excluding models with remote control option) UL 508 (Recognition, models with remote control option) UL 62368-1 (Recognition, OVCII [≤ 3,000 m], Pol2) CSA C22.2 No.107.1 (excluding models with remote control option) CSA C22.2 No.62368-1 (excluding models with remote control option) EN 62477-1 (OVCIII [≤ 2,000 m], OVCII [> 2,000 m and ≤ 3,000 m], Pol2) EN/IEC 62368-1 (OVCII [≤ 3,000 m], Pol2) Conforms to EN/IEC 61558-2-16 Conforms to PELV (EN/IEC 60204-1) RCM (EN61000-6-4) BIS: IS 13252 (Part1) ✱3 (Output voltage 24 V type only. However, excluding S8FS-G30024C-500 and S8FS-G30024CD-500.)			
	Marine Standards		No			
	SEMI		Conforms to F47-0706 (200 VAC input)			

✱1. Refer to *Ratings, Characteristics, and Functions* on page 11.
✱2. Refer to *Standard Compliance* on page 11.
✱3. This BIS Standard is an Indian standard that has been in effect for this product since April 2021, and certification has been acquired for some models to enable individual product export to India. For details, refer to *List of Models with Bureau of Indian Standards (BIS) Certification* on page 11.

Item		Power rating / Output voltage (VDC)	600 W			
			12 V	15 V	24 V	48 V
Efficiency ✱1		100 VAC input	84% typ.	84% typ.	85% typ.	88% typ.
		200 VAC input	88% typ.	88% typ.	89% typ.	92% typ.
		230 VAC input	88% typ.	88% typ.	90% typ.	92% typ.
Input	Voltage range ✱1		Single phase, 85 to 264 VAC, 120 to 350 VDC			
	Frequency ✱1		50 /60 Hz(47 to 63 Hz)			
	Current ✱1	100 VAC input	7.7 A typ.			
		200 VAC input	3.8 A typ.			
	Power factor ✱1		0.9 min.			
	Leakage current ✱1	100 VAC input	0.5 mA max.			
		200 VAC input	1 mA max.			
	Inrush current ✱1 (for a cold start at 25°C)	100 VAC input	14 A typ.			
		200 VAC input	28 A typ.			
Output	Rated Output Current		50 A	40 A	27 A	13 A
	Voltage adjustment range ✱1		–10% to 15% (with V.ADJ)			
	Ripple & Noise voltage ✱1	100 to 240 VAC input	170 mVp-p max.	170 mVp-p max.	280 mVp-p max.	340 mVp-p max.
	Input variation influence ✱1		0.5% max.			
	Load variation influence ✱1		1.0% max.			
	Temperature variation influence	100 to 240 VAC input	0.05%/°C max.			
	Startup time ✱1	100 VAC input	1,000 ms max.			
		200 VAC input	1,000 ms max.			
	Hold time ✱1	100 VAC input	30 ms typ.	25 ms typ.	30 ms typ. 40 ms typ. (Extended hold time type)	30 ms typ.
		200 VAC input	30 ms typ.	25 ms typ.	30 ms typ. 40 ms typ. (Extended hold time type)	30 ms typ.
Additional functions	Overload protection		Yes, automatic reset			
	Overvoltage protection ✱1		Yes, 120% or higher of rated output voltage, power shut off (shut off the input voltage and turn on the input again)			
	Overheat protection		Yes, power shut off (shut off the input voltage and turn on the input again)			
	Series operation		Yes (For up to two Power Supplies, external diodes are required.)			
	Parallel operation		Yes (up to five Power Supplies, S8FS-G60024 (models with parallel operation option) only).			
	Remote sensing		No			
	Remote control		Yes (Only Remote control)			
	Output indicator		Yes (LED: Green)			
Insulation	Withstand voltage		3 kVAC for 1 min. (between all input terminals and output terminals) current cutoff 20 mA			
			2 kVAC for 1 min. (between all input terminals and PE terminals) current cutoff 20 mA			
			1 kVAC for 1 min. (between all output terminals and PE terminals) current cutoff 20 mA			
			Only Remote control 500 VAC for 1 min. (between all output terminals and RC terminals) current cutoff 20 mA			
	Insulation resistance		100 MΩ min. (between all output terminals and all input terminals/PE terminals) at 500 VDC			
Environment	Ambient operating temperature		–20 to 70°C (Derating is required according to the temperature.) (with no condensation or icing)			
	Storage temperature		–25 to 75°C (with no condensation or icing)			
	Ambient operating humidity		90% max. (Storage humidity: 90% max.)			
	Vibration resistance		10 to 55 Hz, 4.5 G max., 0.375-mm half amplitude for 2 h each in X, Y, and Z directions			
	Shock resistance		150 m/s^2, 3 times each in ±X, ±Y, ±Z directions			
Reliability	MTBF		135,000 hrs min.			
	Life expectancy ✱1		10 years min.			
Construction	Dimensions (W×H×D)		Refer to *Dimensions* on page 26.			
	Weight		1,050 g			
	Cooling fan		Yes			
	Degree of protection		---			
Standards	Harmonic current emissions		Conforms to EN 61000-3-2			
	EMI ✱1	Conducted Emissions	Conforms to EN 61204-3 Class B, EN 55011 Class B			
		Radiated Emissions	Conforms to EN 61204-3 Class B, EN 55011 Class B			
	EMS		Conforms to EN 61204-3 high severity levels			
	Safety Standards ✱2		UL 508 (Listing, excluding models with remote control option) UL 508 (Recognition, models with remote control option) UL 62368-1 (Recognition, OVCII [≤ 3,000 m], Pol2) CSA C22.2 No.107.1 (excluding models with remote control option) CSA C22.2 No.62368-1 (excluding models with remote control option) EN 62477-1 (OVCIII [≤ 2,000 m], OVCII [> 2,000 m and ≤ 3,000 m], Pol2) EN/IEC 62368-1 (OVCII [≤ 3,000 m], Pol2) Conforms to EN/IEC 61558-2-16 Conforms to PELV (EN/IEC 60204-1) RCM (EN61000-6-4) BIS: IS 13252 (Part1) ✱3 (Output voltage 24 V type only. However, excluding S8FS-G60024C-500 and S8FS-G60024CD-500.)			
	Marine Standards		No			
	SEMI		Conforms to F47-0706 (200 VAC input)			

✱1. Refer to *Ratings, Characteristics, and Functions* on page 11.
✱2. Refer to *Standard Compliance* on page 11.
✱3. This BIS Standard is an Indian standard that has been in effect for this product since April 2021, and certification has been acquired for some models to enable individual product export to India. For details, refer to *List of Models with Bureau of Indian Standards (BIS) Certification* on page 11.

Ratings, Characteristics, and Functions

Efficiency			The value is when both rated output voltage and rated output current are satisfied.
Input	**Voltage range**		Do not use an inverter output for the Power Supply. Inverters with an output frequency of 50/60 Hz are available, but the rise in the internal temperature of the Power Supply may result in ignition or burning.
	Frequency		
	Current		The value is when both rated output voltage and rated output current are satisfied.
	Power factor		The value is when both rated output voltage and rated output current are satisfied.
	Leakage current		The values are determined according to the Act on Power Supply Safety of Electrical Appliances and Materials.
	Inrush current (for a cold start at 25°C)		For a cold start at 25°C. Refer to the following figure.
Output	**Voltage adjustment range**		If the output voltage adjuster (V. ADJ) is turned, the voltage will increase by more than +15% of the voltage adjustment range. When adjusting the output voltage, confirm the actual output voltage from the Power Supply and be sure that the load is not damaged.
	Ripple & Noise voltage		The value is when both rated output voltage and rated output current are satisfied. A characteristic when the ambient operating temperature is 25°C.
	Input variation influence		This is the maximum variation in the output voltage when the input voltage is gradually changed within the allowable input voltage range at the rated output voltage and rated output current.
	Load variation influence		This is the value when the output current is changed from 0 A to the rated output current while the input voltage is within the allowable input voltage.
	Startup time		The value is when both rated output voltage and rated output current are satisfied. For a cold start at 25°C. Refer to the following figure.
	Hold time		The value is when both rated output voltage and rated output current are satisfied. At 25°C. Refer to the following figure.
Additional functions	**Overvoltage protection**		Refer to *Overvoltage Protection* on page 18 for the time when input voltage shuts off and input turns on again.
Reliability	**Life expectancy**		Refer to *Recommended Replacement Periods and Periodic Replacement for Preventive Maintenance* on page 33 for details.
Standards	**EMI**	**Conducted Emissions**	The 150-W and higher models conform to Class B when an aluminum plate is set under the Power Supply.
		Radiated Emissions	

Standard Compliance

- The input voltage range for compliance with EC Directives and other safety standards (UL, EN, etc.) is 90 to 264 VAC.
- EN/IEC 61558-2-16
  To comply with EN/IEC 60204-1 (Machine Safety), a transformer is required in the control circuit. If, however, a Power Supply that has a built-in transformer that complies with EN/IEC 6155-8-2-16 is used, an external transformer is not required.
- Safety standard targets during a DC input ✻
  During a DC input, UL 62368-1, cUR (CSA C22.2 No. 62368-1), EN/IEC 62368-1, EN 62477-1, EN/IEC 61558-2-16, and EN/IEC 60204-1 are safety standard targets. (However, the input voltage range is 120 to 320 VDC. The safety standards during DC input are not acquired for the S8FS-G60048□.)
  It is possible to comply with the safety standards by connecting a UL-authenticated fuse. Select a UL-authenticated fuse that satisfies the following conditions:
  S8FS-G015□□/030□□ (320 VDC or above, 3 A)
  S8FS-G050□□ (320 VDC or above, 4 A)
  S8FS-G100□□ (320 VDC or above, 8 A)
  S8FS-G150□□ (320 VDC or above, 10 A)
  S8FS-G300□□ (320 VDC or above, 12 A)
  S8FS-G600□□ (320 VDC or above, 20 A)
- To comply with the PELV output of the EN/IEC 60204-1, ground the output negative side (-V) to PE. ✻

✻ Applicable to products produced from May 2018

List of Models with Bureau of Indian Standards (BIS) Certification

S8FS-G15024C	S8FS-G30024C	S8FS-G60024C-R
S8FS-G15024C-R	S8FS-G30024C-H	S8FS-G60024C-W
S8FS-G15024CD	S8FS-G30024C-R	S8FS-G60024C-WR
S8FS-G15024CD-R	S8FS-G30024CD	S8FS-G60024CD
S8FS-G15024CDE	S8FS-G30024CD-H	S8FS-G60024CD-H
S8FS-G15024CDE-R	S8FS-G30024CD-R	S8FS-G60024CD-R
S8FS-G15024CE	S8FS-G60024C	S8FS-G60024CD-W
S8FS-G15024CE-R	S8FS-G60024C-H	S8FS-G60024CD-WR

Note: Ask your OMRON sales representative about models not contained in the list above.

Inrush Current, Startup Time, Output Hold Time

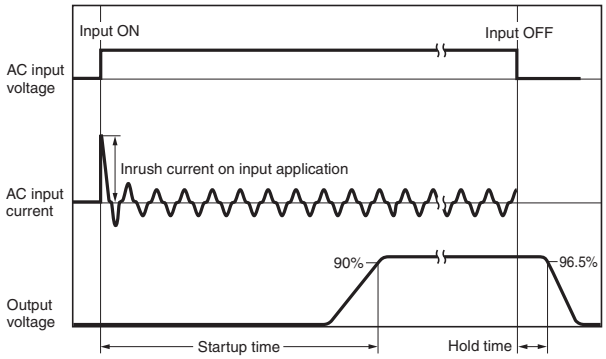

Note: The total inrush current of all of the Power Supplies will flow for parallel operation or backup operation.
Sufficiently check the fusing characteristics of fuses and the operating characteristics of breakers and select fuses and breakers so that external fuses will not burn out or breakers will not operate due to inrush current.

Ripple Noise Voltage

The specified standard for the ripple voltage noise was measured with a measurement circuit that is based on JEITA standard RC-9131A.

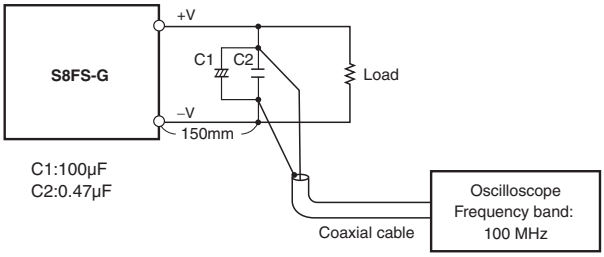

Connections

Block Diagrams

S8FS-G015□□□ (15 W)
S8FS-G030□□□ (30 W)
S8FS-G050□□□ (50 W)

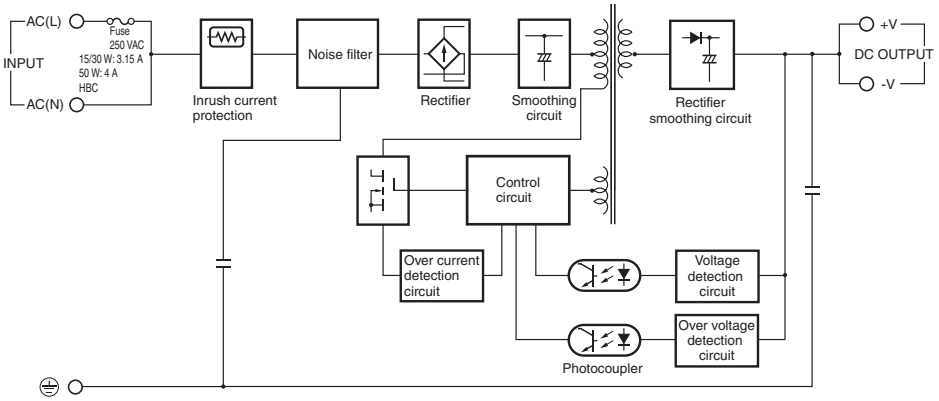

S8FS-G100□□□ (100 W)
S8FS-G150□□□ (150 W)

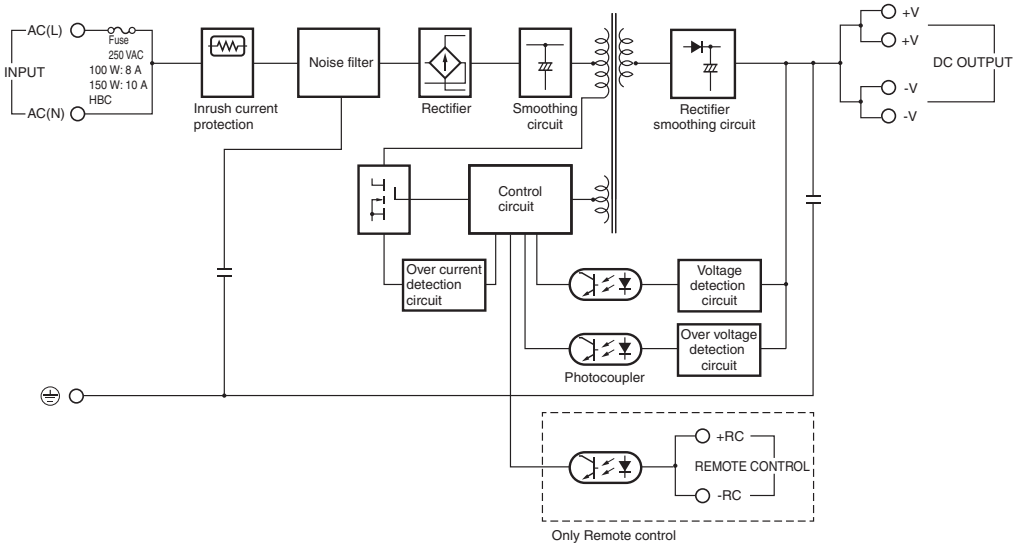

S8FS-G300□□□ (300 W)

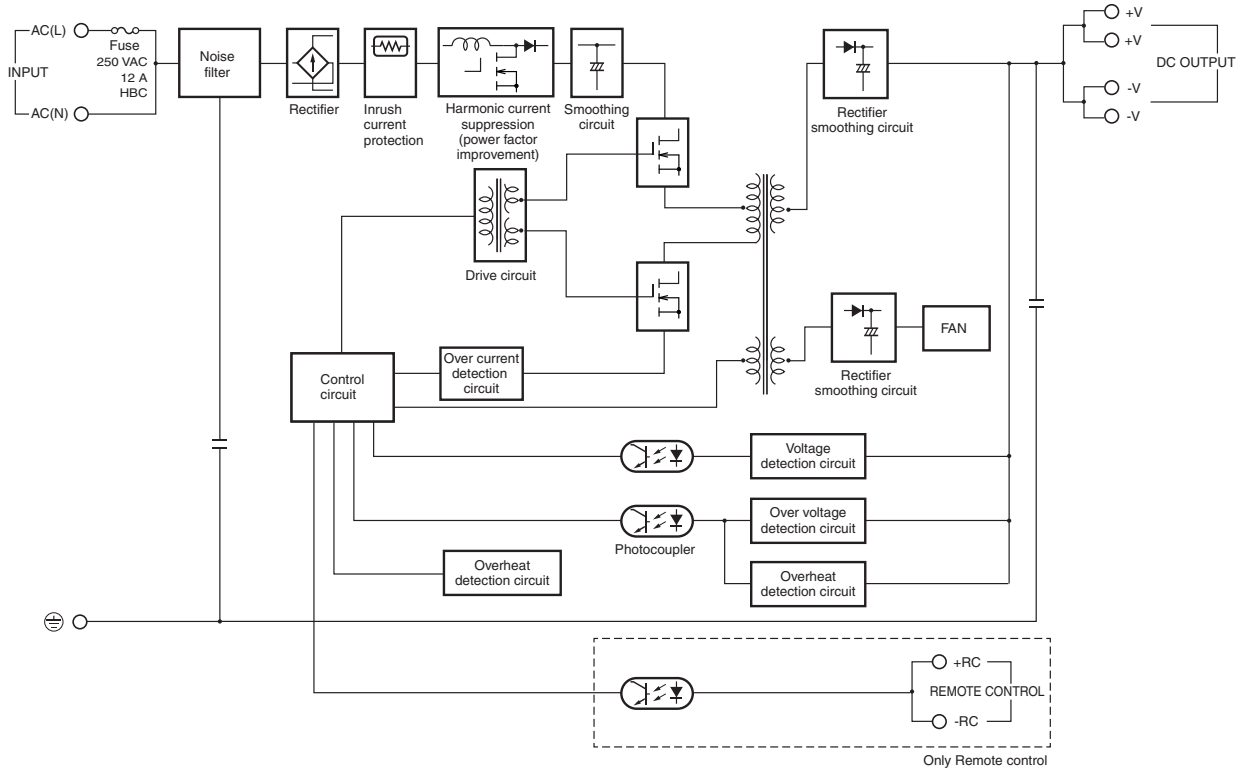

S8FS-G600□□□ (600 W)

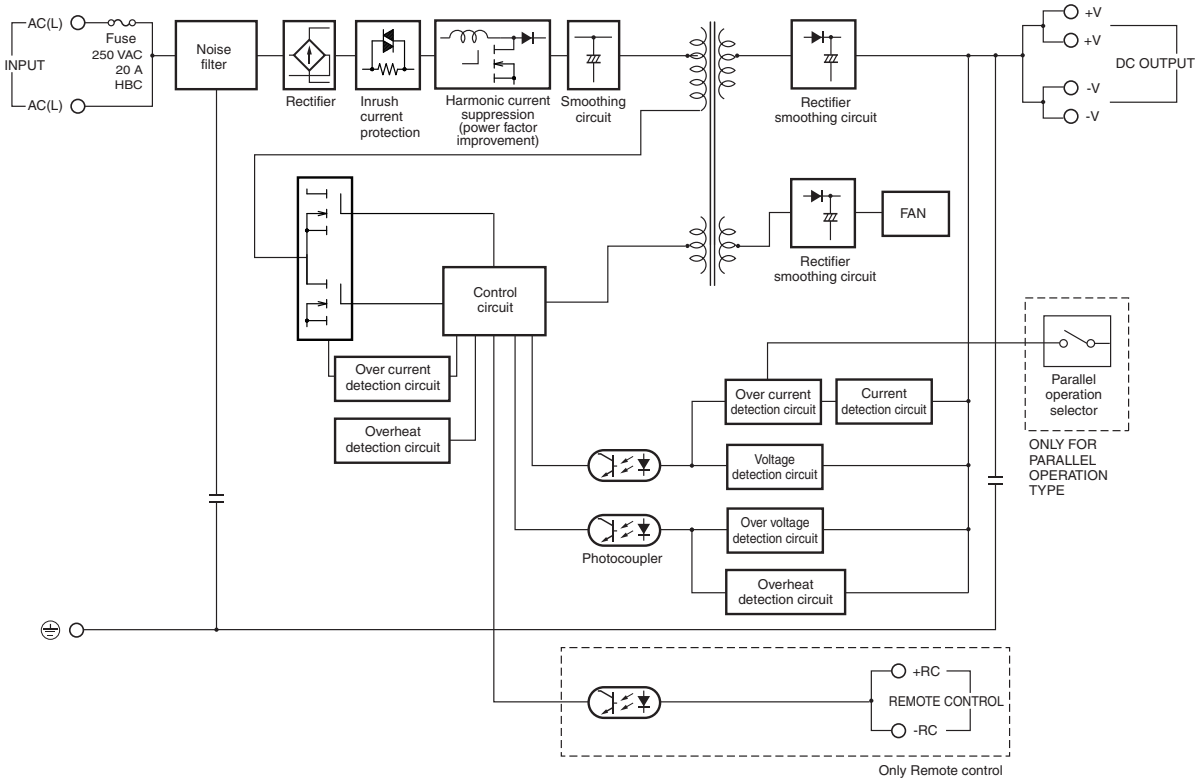

Construction and Nomenclature

Nomenclature

S8FS-G015□□□
S8FS-G030□□□
S8FS-G050□□□

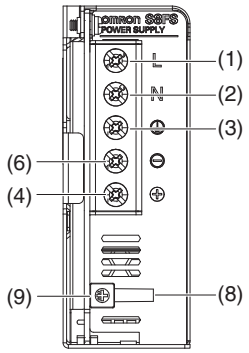

S8FS-G100□□□
S8FS-G150□□□

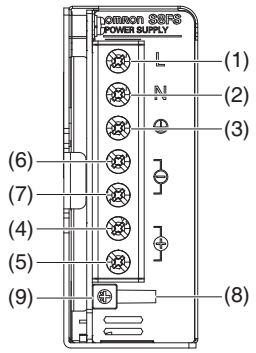

S8FS-G300□□□
S8FS-G600□□□

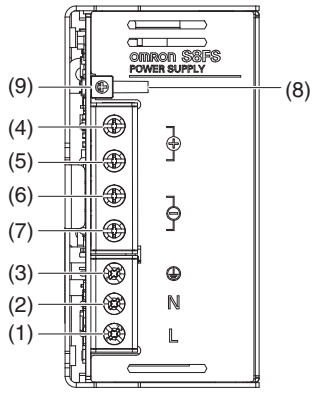

S8FS-G□□□24CE

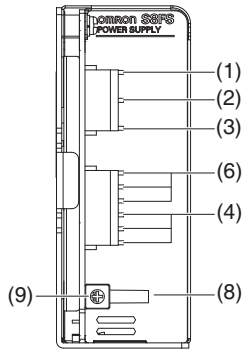

S8FS-G□□□24C-R

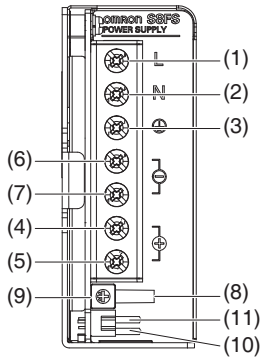

S8FS-G□□□24C-WR

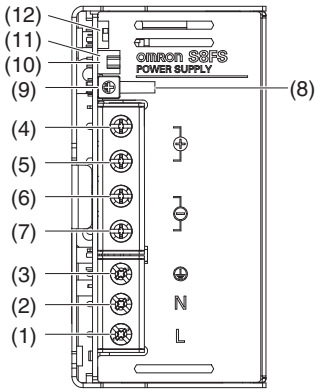

No.	Terminal name	Name	Function
(1)	L	Input terminals	Connect the input lines to these terminals. ✻1
(2)	N		
(3)	PE	Protective Earth terminal (⏚)	Connect the ground line to this terminal. ✻2
(4)	+V1	DC output terminals	Connect the load lines to these terminals.
(5)	+V2		
(6)	-V1		
(7)	-V2		
(8)	---	Output indicator (DC ON: green)	Lights while a direct current (DC) output is ON.
(9)	---	Output voltage adjuster (V.ADJ)	Use to adjust the voltage.
(10)	+RC	Remote control terminals	Wire for remote control.
(11)	-RC		
(12)	---	Parallel operation switch	To operate in parallel, set the switch to the “PARALLEL” side.

✻1. The fuse is located on the (L) side. It is not user-replaceable. For a DC input, connect the positive voltage to the L terminal.
✻2. This is the protective earth terminal specified in the safety standards. Always ground this terminal.

Input and Output Connectors (Connector type)

			Applicable connector	Housing	Terminals	Applicable crimp tool
Input side	**All models**	**CN110**	B3P5-VH (LF) (SN)	VHR-5N	Reel: SVH-21T-P1.1 Bulk: BVH-21T-P1.1	YC-160R
Output side	**S8FS-G01524□E** **S8FS-G03024□E** **S8FS-G05024□E**	**CN510**	B4P-VH (LF) (SN)	VHR-4N		
	S8FS-G10024□E **S8FS-G15024□E**		B6P-VH (LF) (SN)	VHR-6N		
Manufacturer			J.S.T. Mfg. Co., Ltd.			

Note: The female connectors that are required for wiring are not provided with the Power Supply.

Engineering Data

Derating Curves

Output Derating

Standalone operation (15 W to 150 W)

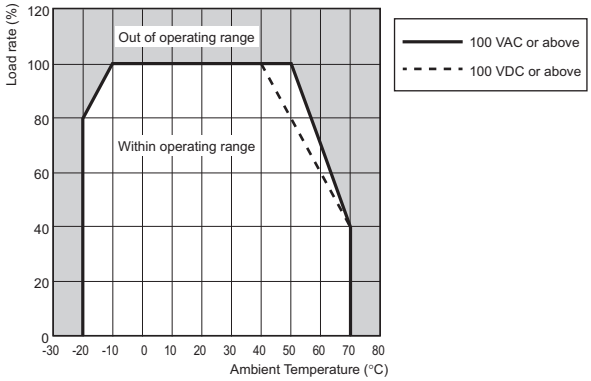

Note: Multiply the load ratio shown in the above output derating curve by the coefficient of load reduction to input voltage.

Standalone operation (300 W/600 W)

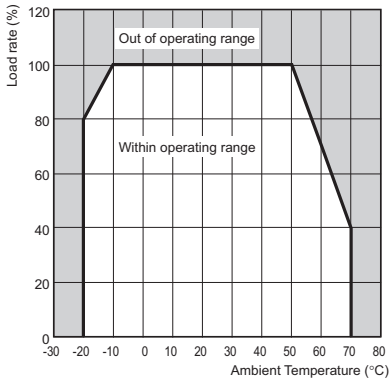

Note: Multiply the load ratio shown in the above output derating curve by the coefficient of load reduction to input voltage.

Parallel Operation

For Models with Parallel Operation Option

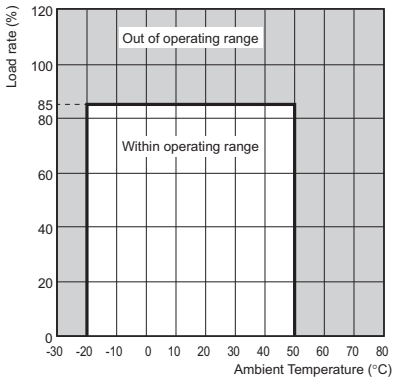

Note: Multiply the load ratio shown in the above output derating curve by the coefficient of load reduction to input voltage.

Coefficient of load reduction to input voltage

AC input (15 W to 600 W)

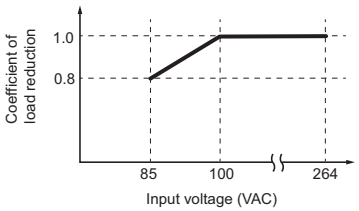

✻15 W/30 W/50 W/100 W/150 W only when used at ambient temperature 40°C or higher

DC input (15 W to 150 W)

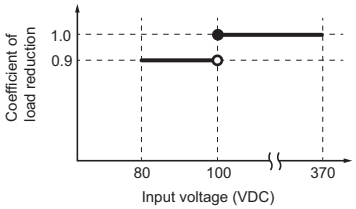

This Power Supply can be used at an altitude of 3,000 m.
Between 2,000 and 3,000 m, derate the load according to the following derating curve.

15 W to 150 W (During an AC input)

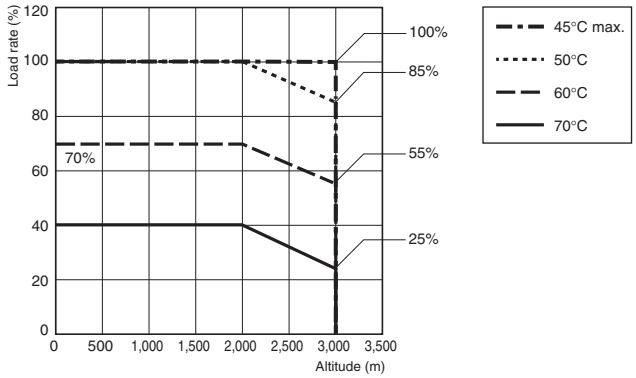

Note: Multiply the load ratio shown in the above output derating curve by the coefficient of load reduction to input voltage.

15 W to 150 W (During a DC input)

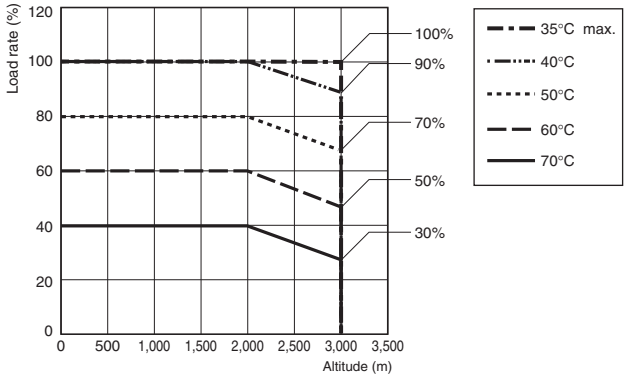

Note: Multiply the load ratio shown in the above output derating curve by the coefficient of load reduction to input voltage.

300 W and 600 W

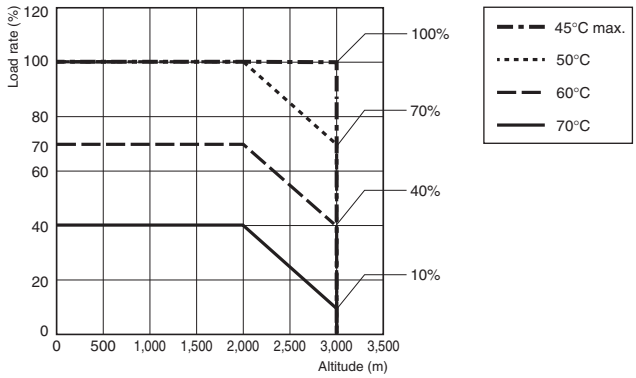

Note: Multiply the load ratio shown in the above output derating curve by the coefficient of load reduction to input voltage.

Coefficient of load reduction to input voltage

AC input (15 W to 600 W)

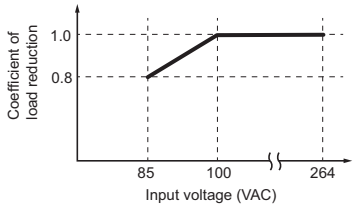

✻ 15 W/30 W/50 W/100 W/150 W only when used at ambient temperature 40°C or higher

DC input (15 W to 150 W)

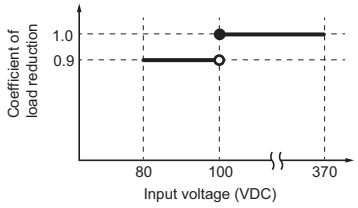

Engineering Data

Overload Protection

The load and the Power Supply are automatically protected from overcurrent damage by this function. Overload protection is activated if the output current rises above 105 to 160% of the rated current. When the output current returns within the rated range overload protection is automatically cleared.

15W/30W/50W/100W/150W

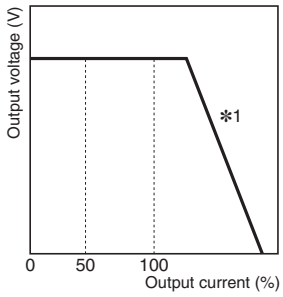

300W

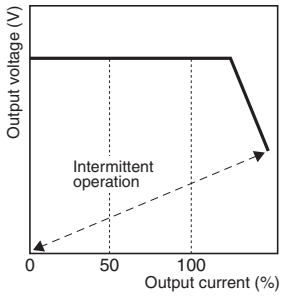

600W

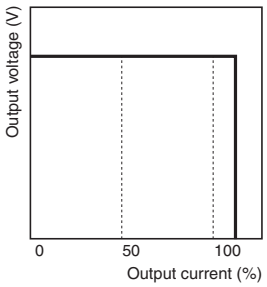

***1.** Operation is intermittent in a fixed cycle in short-circuited or overcurrent states.

Note: 1. Internal parts may occasionally deteriorate or be damaged if a short-circuited or overcurrent state continues during operation.

2. Internal parts may possibly deteriorate or be damaged if the Power Supply is used for applications with frequent inrush current or overloading at the load end. Do not use the Power Supply for such applications.

Overvoltage Protection

Consider the possibility of an overvoltage and design the system so that the load will not be subjected to an excessive voltage even if the feedback circuit in the Power Supply fails.
If an excessive voltage that is 120% of the rated voltage or more is output, the output voltage is shut OFF.
Reset the input power by turning it OFF for at least three minutes and then turning it back ON again.

Overheating Protection (300 W and 600 W)

If the internal temperature of the Power Supply rises excessively as a result of fan failure or any other reason, the overheat protection circuit will be triggered to shut OFF the output voltage.
To restore operation, turn OFF the input power supply long enough for the Power Supply to cool sufficiently and then turn it ON again.

Remote Control Function (Only Remote control)

This function is to turn ON/OFF the output by applying a voltage to the remote control connector from a DC power Supply (external power supply) other than this Power Supply.

Voltage between +RC and -RC (V)	Output voltage (VDC)
4.5 to 12.5	ON
0 to 0.5	OFF

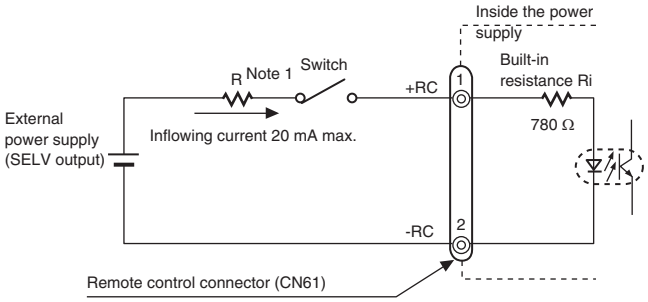

Usage example of the remote control

Connectors used:

	CN61	Applicable connector	Applicable contact
Model	B2B-XH-AM	XHP-2	SXH-001T-P0.6 or SXH-002T-P0.6
Manufacturer	J.S.T. Mfg. Co., Ltd.		

Applicable crimp tool: YC-110R (J.S.T. Mfg. Co., Ltd.) or YRS-110 (J.S.T. Mfg. Co., Ltd.)

Note: 1. When the external power supply is 4.5 to 12.5 V, the current limiting resistor R is not required. When it is 12.5 to 24.5 V, insert 1.5 kΩ as the current limiting resistor R.

2. Reverse connection of the connector may cause damage on the internal parts.

3. The +RC and -RC terminals are the secondary circuit of the Power Supply. Use an SELV output power supply for an external power supply. The remote control circuit is insulated from the secondary output of the Power Supply (functional insulation).

Reference Value

	Value
Reliability (MTBF)	Single phase model 15W: 970,000 30W: 970,000 50W: 880,000 100W: 730,000 150W: 620,000 300W: 200,000 600W: 190,000
Definition	MTBF stands for Mean Time Between Failures, which is calculated according to the probability of accidental device failures, and indicates reliability of devices. Therefore, it does not necessarily represent a life of the product.
Life expectancy	10 yrs. Min.
Definition	The life expectancy indicates average operating hours under the ambient temperature of 40°C and a load rate of 50%. Normally this is determined by the life expectancy of the built-in aluminum electrolytic capacitor.

Dimensions

(Unit: mm)

Power Supplies

15 W and 30 W

S8FS-G015□□C
S8FS-G030□□C

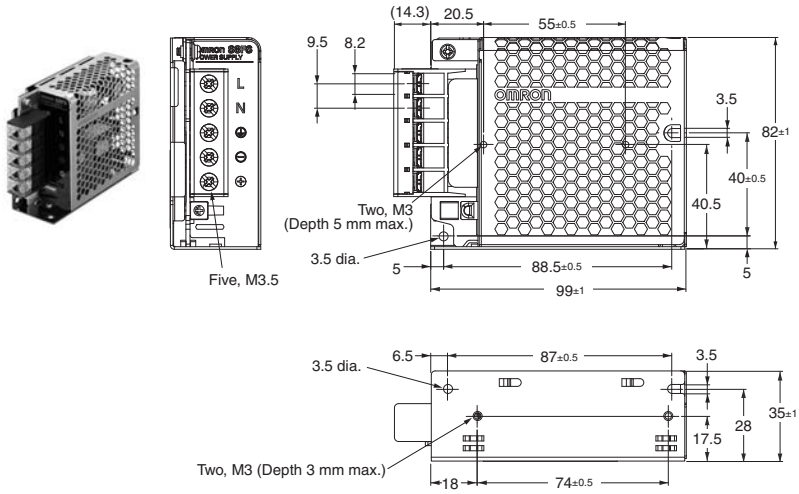

Panel mounting holes dimensions

	Using the mounting holes in the Power Supply	Using the screw holes in the Power Supply
Side Mounting	Two, M3; 40±0.5; 88.5±0.5	Two, 3.5 dia.; 55±0.5
Bottom Mounting	Two, M3; 87±0.5	Two, 3.5 dia.; 74±0.5

S8FS-G015□□CD
S8FS-G030□□CD

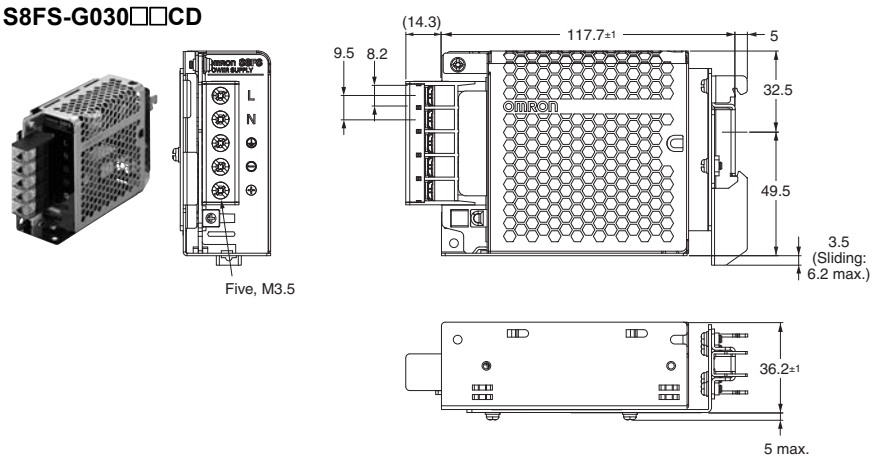

S8FS-G015□□E
S8FS-G030□□E

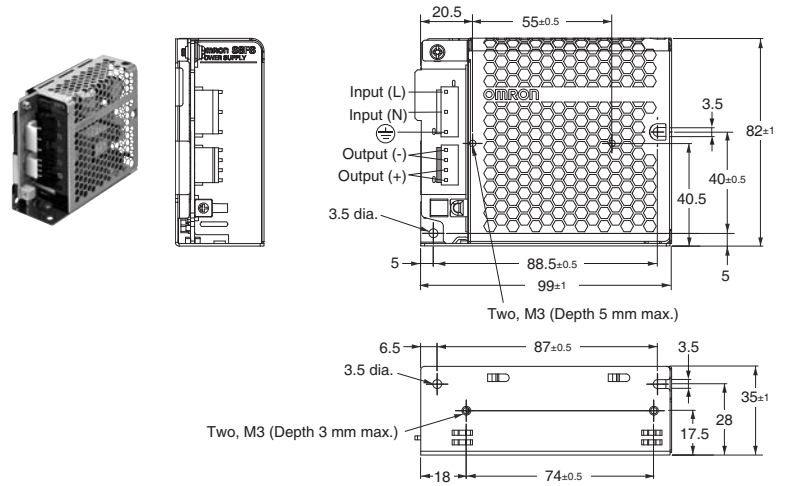

Panel mounting holes dimensions

	Using the mounting holes in the Power Supply	Using the screw holes in the Power Supply
Side Mounting	Two, M3; 40±0.5; 88.5±0.5	Two, 3.5 dia.; 55±0.5
Bottom Mounting	Two, M3; 87±0.5	Two, 3.5 dia.; 74±0.5

50W

S8FS-G050□□C

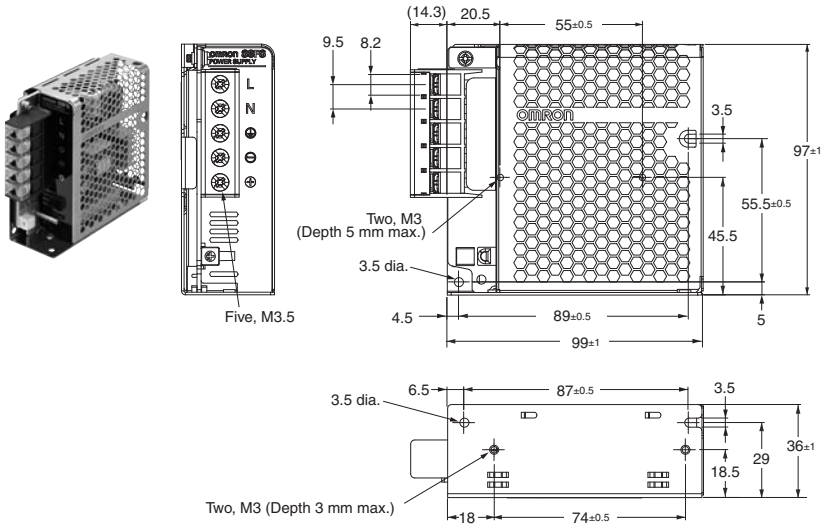

Panel mounting holes dimensions

	Using the mounting holes in the Power Supply	Using the screw holes in the Power Supply
Side Mounting	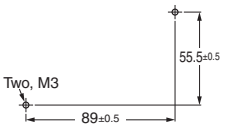	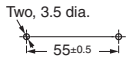
Bottom Mounting	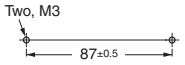	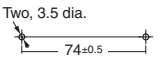

S8FS-G050□□CD

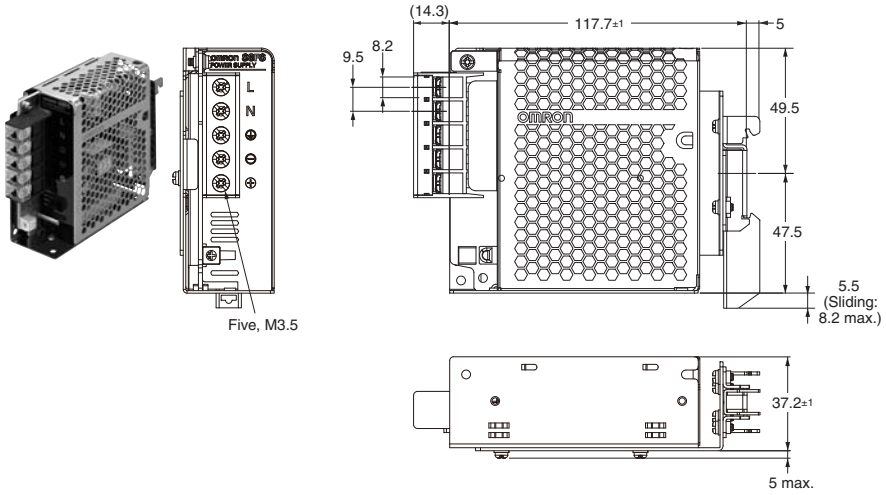

S8FS-G050□□E

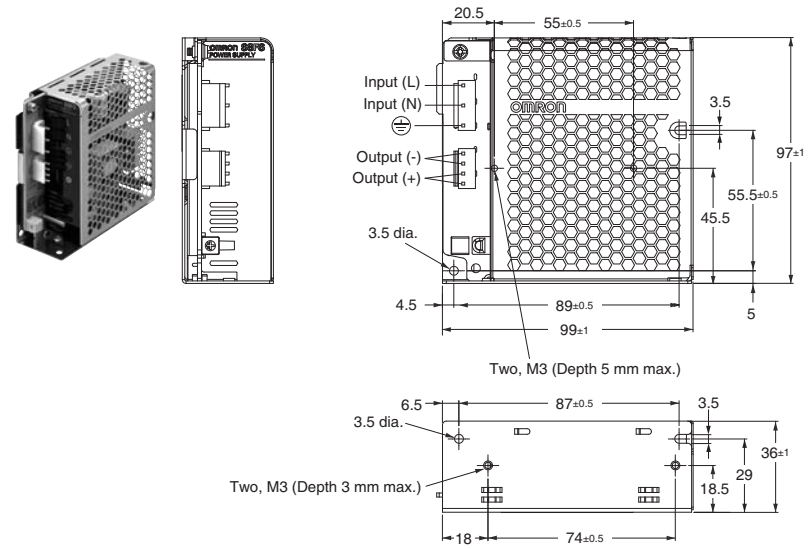

Panel mounting holes dimensions

	Using the mounting holes in the Power Supply	Using the screw holes in the Power Supply
Side Mounting	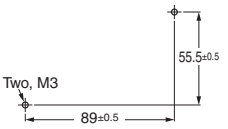	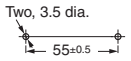
Bottom Mounting	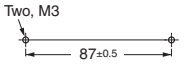	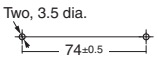

100W

S8FS-G100□□C

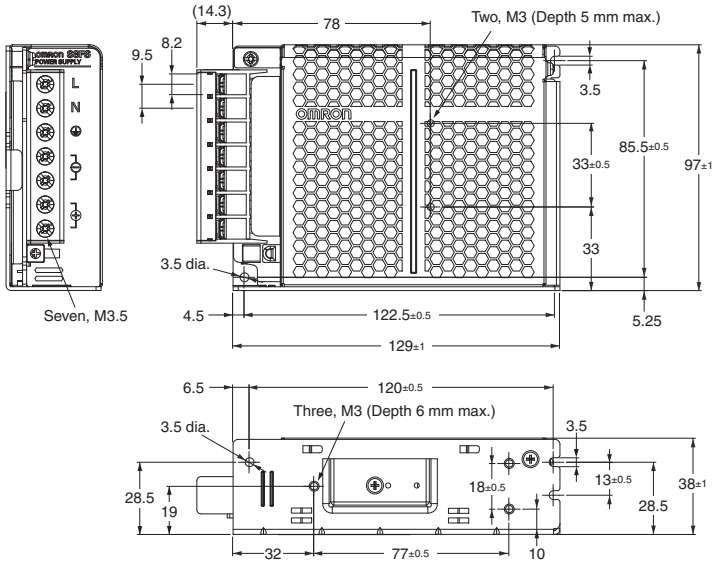

Panel mounting holes dimensions

	Using the mounting holes in the Power Supply	Using the screw holes in the Power Supply
Side Mounting	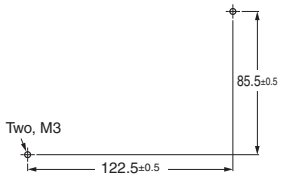	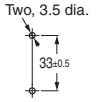
Bottom Mounting	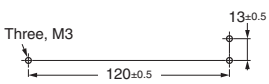	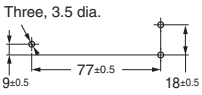

S8FS-G100□□CD

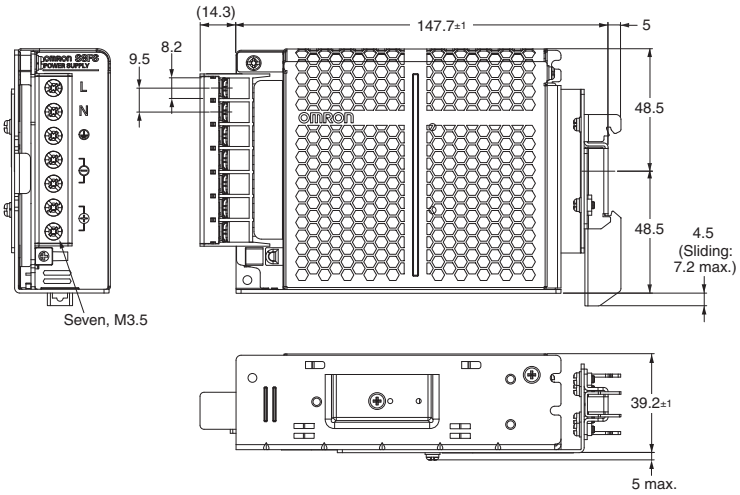

S8FS-G100□□E

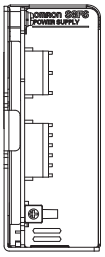

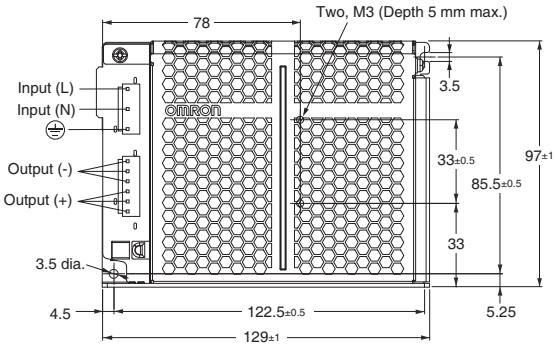

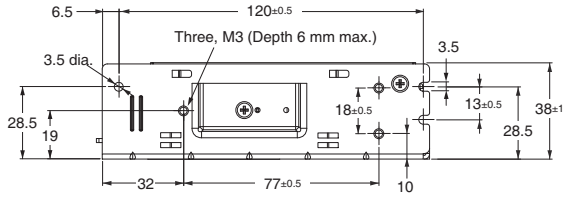

Panel mounting holes dimensions

	Using the mounting holes in the Power Supply	Using the screw holes in the Power Supply
Side Mounting	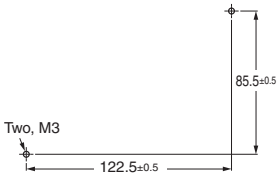	
Bottom Mounting	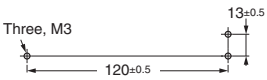	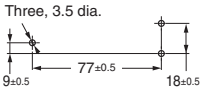

150W

S8FS-G150□□C

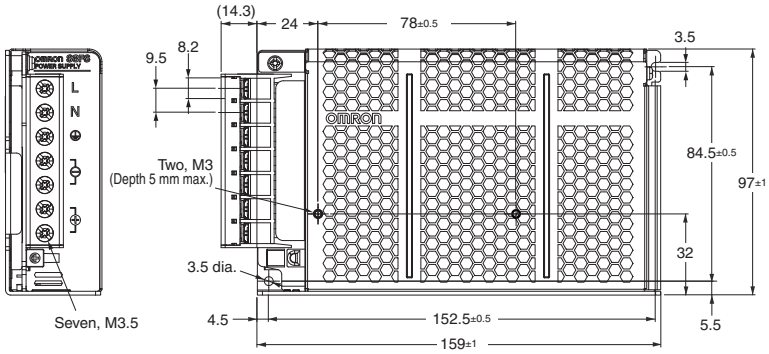

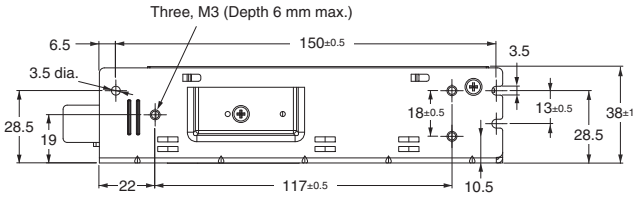

Panel mounting holes dimensions

	Using the mounting holes in the Power Supply	Using the screw holes in the Power Supply
Side Mounting	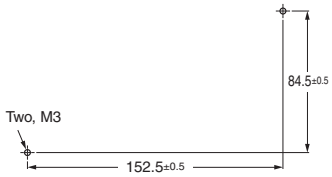	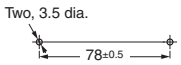
Bottom Mounting	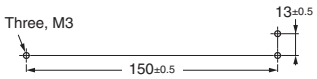	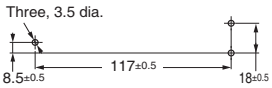

S8FS-G150□□CD

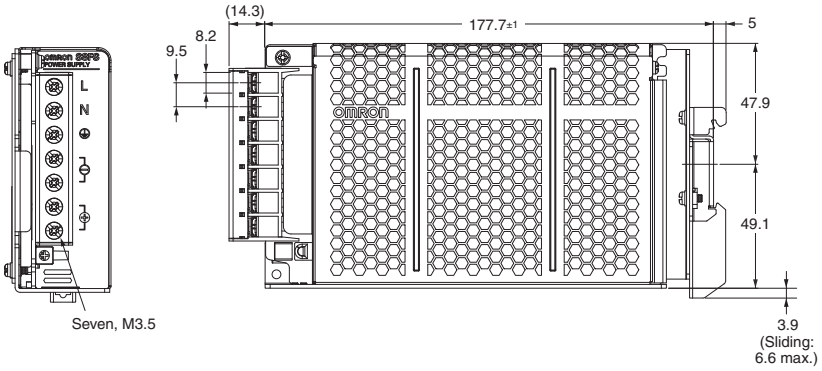

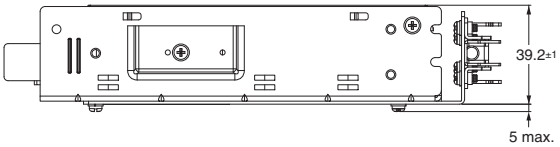

S8FS-G150□□E

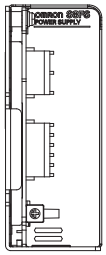

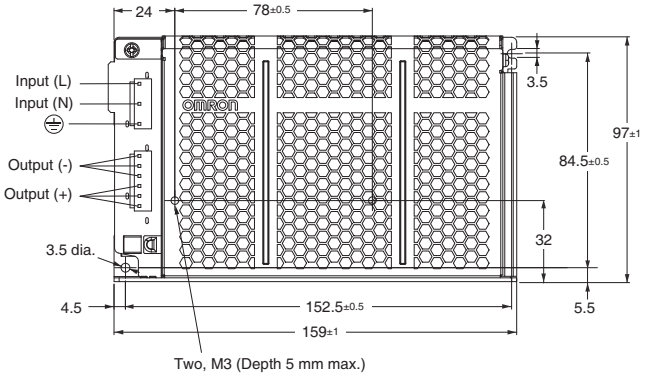

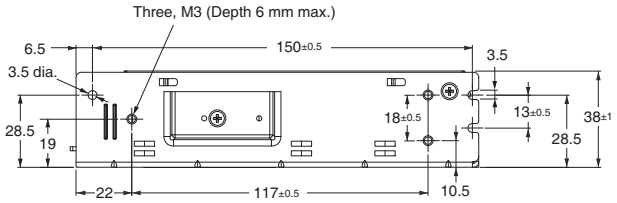

Panel mounting holes dimensions

	Using the mounting holes in the Power Supply	Using the screw holes in the Power Supply
Side Mounting	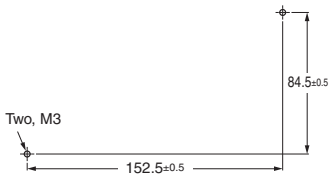	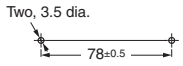
Bottom Mounting	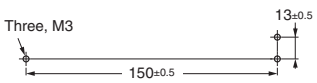	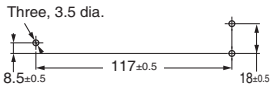

300W

S8FS-G300□□C

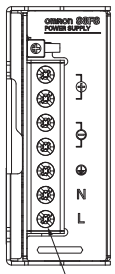

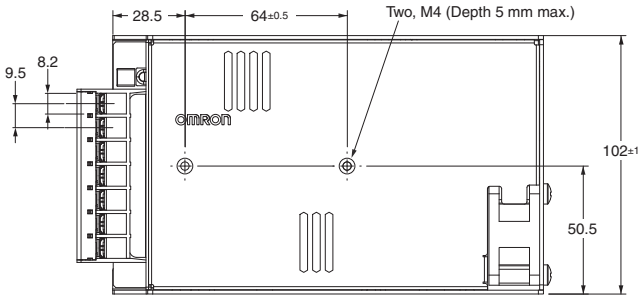

Seven, M3.5

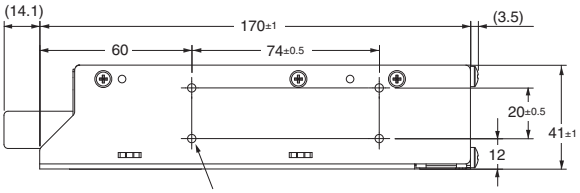

Four, M4 (Depth 5 mm max.)

Panel mounting holes dimensions

	Using the screw holes in the Power Supply
Side Mounting	Two, 4.5 dia. 64±0.5
Bottom Mounting	Four, 4.5 dia. 20±0.5 74±0.5

S8FS-G300□□CD

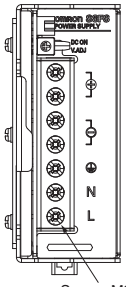

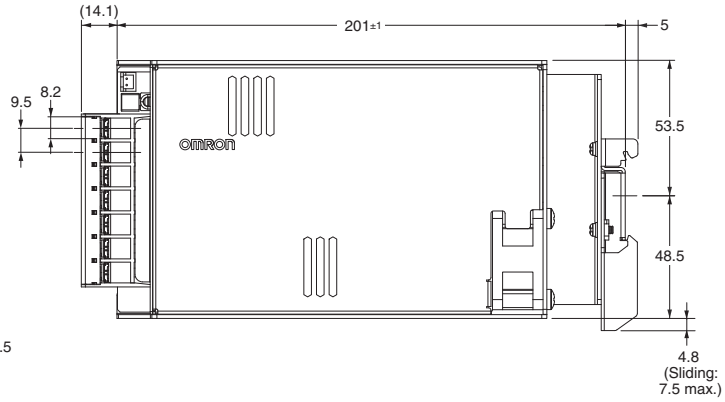

Seven, M3.5

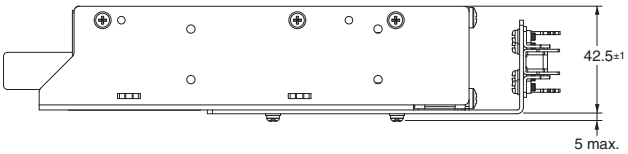

Note: Use a Front-mounting Bracket (S82Y-FSG-30F) when the DIN Rail is not strong enough for your usage environment.

600W

S8FS-G600□□C

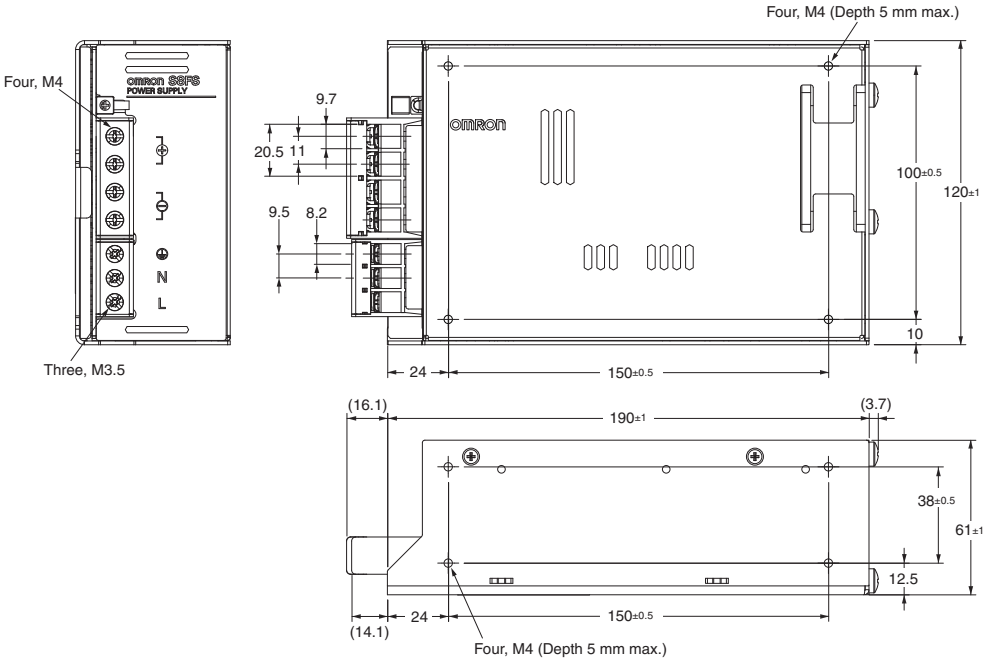

Panel mounting holes dimensions

	Using the screw holes in the Power Supply
Side Mounting	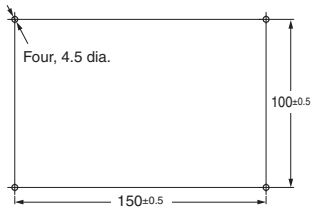
Bottom Mounting	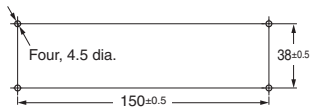

S8FS-G600□□CD

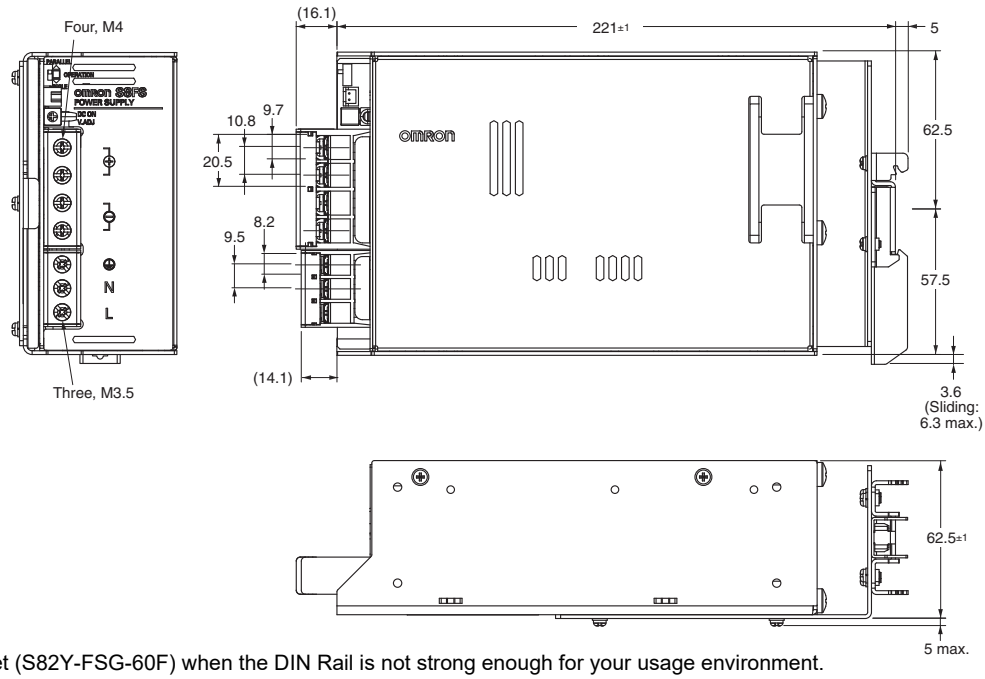

Note: Use a Front-mounting Bracket (S82Y-FSG-60F) when the DIN Rail is not strong enough for your usage environment.

Mounting Brackets (Order Separately)

Use the Front-mounting Brackets together with DIN Rail-mounting Power Supplies (S8FS-G□□□□□CD). Purchase a DIN Rail mounting bracket separately to mount direct mounting models (S8FS-G□□□□□C) on a DIN Rail.

Power rating	Mounting direction	Model
15 W, 30 W, 50 W 100 W, 150 W and 300 W	Front-mounting	**S82Y-FSG-30F**
600 W	Front-mounting	**S82Y-FSG-60F**

S82Y-FSG-30F

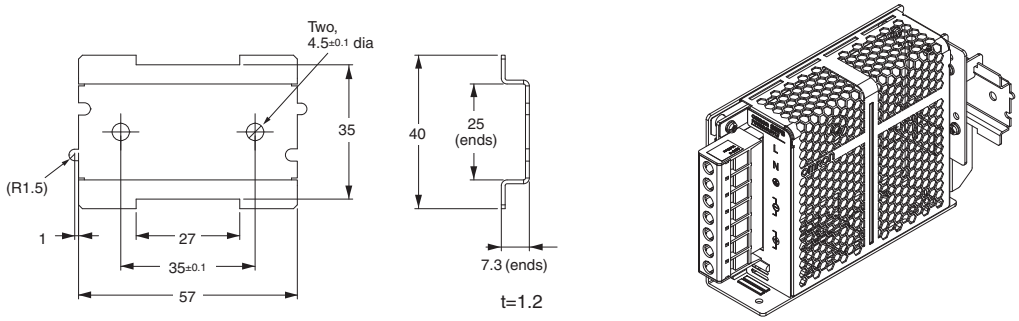

S82Y-FSG-60F

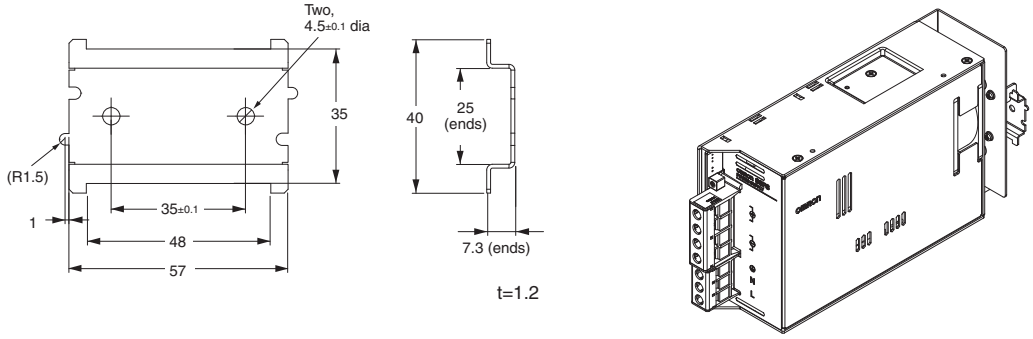

Note: Replacement brackets from the S8JX-N, S8JX-P, and S8VM series are available. Use these brackets for a front mounting configuration using direct mounting models.
Refer to the data sheet (Cat. No.: T216-E1, T217-E1, and T218-E1) for more information.

Terminal cover (Order Separately)

Power rating	Applicable models	Terminal Cover model number
15 W	S8FS-G015□□□	S82Y-FSG-C5P
30 W	S8FS-G030□□□	
50 W	S8FS-G050□□□	
100 W	S8FS-G100□□□	S82Y-FSG-C7P
150 W	S8FS-G150□□□	
300 W	S8FS-G300□□□	
600 W	S8FS-G600□□□	S82Y-FSG-C7P-L (Input Output)

Note: A Terminal Block Cover is provided with the Power Supply as a standard accessory. You can purchase another one if your Cover is damaged or lost.

DIN Rail (Order Separately)

(Unit: mm)

Mounting Rail (Material: Aluminum)

PFP-100N
PFP-50N

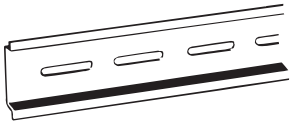

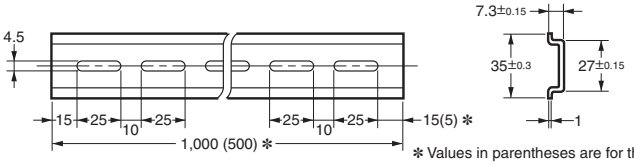

✻ Values in parentheses are for the PFP-50N.

Mounting Rail (Material: Aluminum)

PFP-100N2

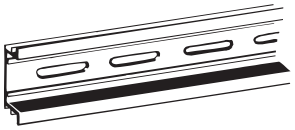

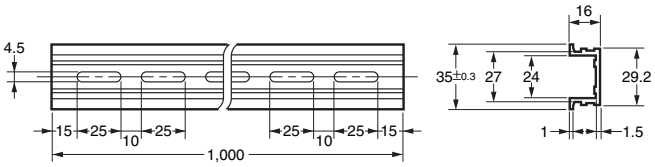

End Plate

PFP-M

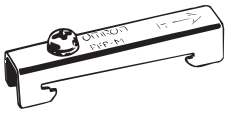

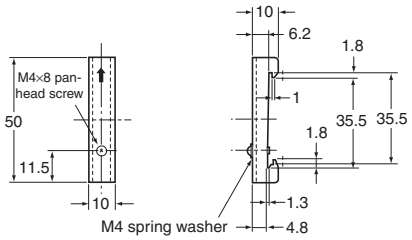

Note: If there is a possibility that the Unit will be subject to vibration or shock, use a steel DIN Rail. Otherwise, metallic filings may result from aluminum abrasion.

Safety Precautions

Refer to Safety Precautions for All Power Supplies.

Warning Indications

CAUTION	**Indicates a potentially hazardous situation which, if not avoided, may result in minor or moderate injury or in property damage.**
Precautions for Safe Use	**Supplementary comments on what to do or avoid doing, to use the product safely.**
Precautions for Correct Use	**Supplementary comments on what to do or avoid doing, to prevent failure to operate, malfunction or undesirable effect on product performance.**

Meaning of Product Safety Symbols

	Used to warn of the risk of electric shock under specific conditions.
	Used to warn of the risk of minor injury caused by high temperatures.
	Use to indicate prohibition when there is a risk of minor injury from electrical shock or other source if the product is disassembled.
	Used for general mandatory action precautions for which there is no specified symbol.

CAUTION

Minor electric shock, fire, or Product failure may occasionally occur. Do not disassemble, modify, or repair the Product or touch the interior of the Product.

Minor burns may occasionally occur. Do not touch the Product while power is being supplied or immediately after power is turned OFF.

Fire may occasionally occur. Tighten terminal screws to the specified torque.
M3.5: 0.74 to 1.13N·m
M4: 1.08 to 1.32N·m

Minor injury due to electric shock may occasionally occur. Do not touch the terminals while power is being supplied.

Minor electric shock, fire, or Product failure may occasionally occur. Do not allow any pieces of metal or conductors or any clippings or cuttings resulting from installation work to enter the Product.

Precautions for Safe Use

Ambient Operating and Storage Environments

- Store the Power Supply at a temperature of –25 to 75°C and a humidity of 90% max.
- Make sure to use the Power Supply within the derating curve, as this may damage the product. Ambient temperature, input voltage and altitude affect the derating.
- Use the Power Supply at a humidity of 90% max.
- Do not use locations where liquids, foreign matter, or corrosive gases may enter the interior of the Power supplies.

Installation Environment

- Do not use the Power Supply in locations subject to shocks or vibrations. In particular, install the Power Supply as far away as possible from contractors or other devices that are a vibration source.
- Install the Power Supply well away from any sources of strong, high-frequency noise and surge.

Mounting

- Take adequate measures to ensure proper heat dissipation to increase the long-term reliability of the Power Supply.
  Be sure to allow convection in the atmosphere around devices when mounting.
  Do not use in locations where the ambient temperature exceeds the range of the derating curve.
  The S8FS-G015□□□ to S8FS-G150□□□ are cooled by natural convection. Mount them so that air convection will occur around them.
  The S8FS-G300□□□ and S8FS-G600□□□ are cooled by forced airflow. Do not allow the ventilation holes to be blocked. The effectiveness of cooling would be reduced.
- When cutting out holes for mounting, make sure that cuttings do not enter the interior of the Power supplies.
- The internal parts may occasionally deteriorate and be broken due to adverse heat radiation. Do not loosen the screws on the Power Supply.
- If you mount the Power Supply with the holes provided on the chassis, do not exceed the depth given in the dimensional diagrams.
  Use the following tightening torques.
  M3 screws: 0.48 to 0.59 N·m
  M4 screws: 1.08 to 1.32 N·m

Mounting

<Standard mounting>

S8FS-G015□□□ to 150□□□

Bottom mounting

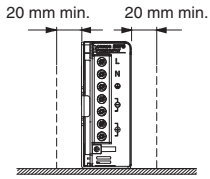

Side (horizontal orientation) mounting

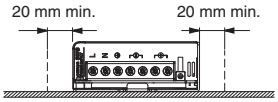

S8FS-G300□□□ and S8FS-G600□□□

Bottom mounting

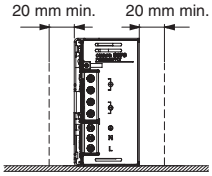

Side (horizontal orientation) mounting

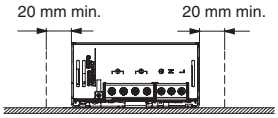

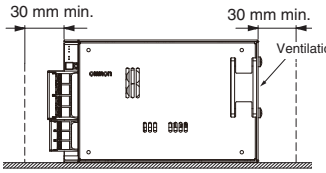

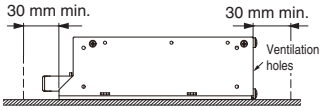

Note: Use a metal plate as the mounting surface.

DIN rail mounting

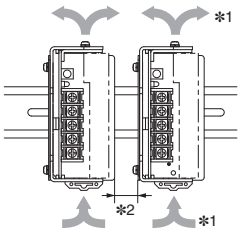

***1.** Convection of air.
***2.** 20 mm min.

<Other mounting types> *2

S8FS-G015□□□ to 150□□□

Side (vertical orientation) mounting

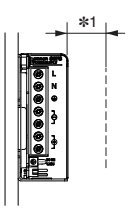

Side (upward) mounting

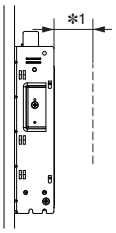

Bottom (upward) mounting

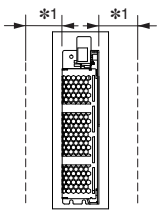

***1.** 20 mm min.
***2.** Applicable to products produced from May 2018

<DIN Rail Mounting>

To mount the Power Supply to a DIN Rail, hook portion (A) of the Power Supply onto the DIN Rail and press the Power Supply in direction (B) until you hear it lock into place.

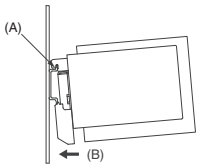

To dismount the Block, pull down portion (C) with a flat-blade screwdriver and pull out the Block.

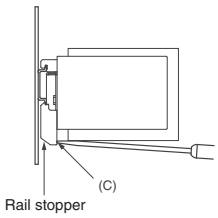

Wiring

- Connect the ground completely. A protective earthing terminal stipulated in safety standards is used. Electric shock or malfunction may occur if the ground is not connected completely.
- Minor fire may possibly occur. Ensure that input and output terminals are wired correctly.
- Do not apply more than 150-N force to the terminal block when tightening it.
- Be sure to remove the sheet covering the Power Supply for machining before power-ON so that it does not interfere with heat dissipation.
- Use the following material for the wires to be connected to the S8FS-G to prevent smoking or ignition caused by abnormal loads.

Terminals and Wiring (Screw terminal block type)

Terminals	Model	Recommendes Wire Gauges
Input	S8FS-G015□□□	AWG12-22
	S8FS-G030□□□ to 100□□□	AWG12-20
	S8FS-G150□□□ to 600□□□	AWG12-16
Output	S8FS-G01512□ to 01524□	AWG12-22
	S8FS-G03024□	
	S8FS-G01505□	AWG12-20
	S8FS-G03012□, 03015□	
	S8FS-G05015□, 05024□	
	S8FS-G15048□	
	S8FS-G05012□	AWG12-18
	S8FS-G10024□	
	S8FS-G03005□	AWG12-16
	S8FS-G10015□	
	S8FS-G15024□	
	S8FS-G30048□	
	S8FS-G05005□	AWG12-14
	S8FS-G10012□	
	S8FS-G15015□	
	S8FS-G10005□	AWG12
	S8FS-G15005□, 15012□	
	S8FS-G30012□ to 30024□	
	S8FS-G60015□ to 60048□	AWG10-12
	S8FS-G60012□	AWG10
Protective earth terminal	S8FS-G015□□□ to 600□□□	AWG12-14

Note: The current capacity per output terminal is given in the following table.
S8FS-G015□□□ to S8FS-G300□□□: 20 A
S8FS-G600□□□: 30 A
Use two terminals together if the current flow is higher than the rated terminal current.

Terminals and Wiring (Connector type)

Terminals	Model	Recommendes Wire Gauges
Input	S8FS-G01524□E to 15024□E	AWG18
Output	S8FS-G01524□E to 15024□E	AWG18

Note: 1. The current capacity per output terminal is 5 A.
Use two or more terminals together if the current flow is higher than the rated terminal current.
2. Do not insert and remove any connector more than 20 times.
3. Refer to Input and Output Connectors on page 15 for the model numbers of the input and output connectors.

Overcurrent Protection

- Internal parts may possibly deteriorate or be damaged if a short-circuited, overload, or boost load state continues during operation.
- Internal parts may possibly deteriorate or be damaged if the Power Supply is used for applications with frequent inrush current or overloading at the load end. Do not use the Power Supply for such applications.

Output Voltage Adjuster (V. ADJ)

- The output voltage adjuster (V. ADJ) may possibly be damaged if it is turned with unnecessary force. Do not turn the adjuster with excessive force.
- After completing output voltage adjustment, be sure that the output capacity or output current does not exceed the rated output capacity or rated output current.

Series Operation

Two Power Supplies can be connected in series operation.

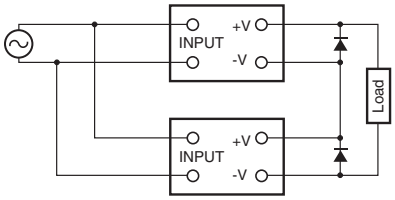

Note: 1. The diode is connected as shown in the figure. If the load is short-circuited, a reverse voltage will be generated inside the Power Supply. If this occurs the Power Supply may possibly deteriorate or be damaged. Always connect a diode as shown in the figure. Select a diode having the following ratings.

Type	Schottky Barrier diode
Dielectric strength (V_{RRM})	Twice the output voltage or above
Forward current (I_F)	Twice the rated output current or above

2. Although Power Supply having different specifications can be connected in series, the current flowing through connected in series, the current flowing through the load must not exceed the smaller rated output current.

<Making Positive/Negative Outputs>

- The outputs are floating outputs (i.e., the primary circuits and secondary circuits are separated). You can therefore make positive and negative outputs by using two Power Supplies. If positive and negative outputs are used, connect Power Supplies of the same series as in the following figure. Combinations with different output capacities or output voltages can be made. However, use the lower of the two rated rated output currents as the current to the loads.

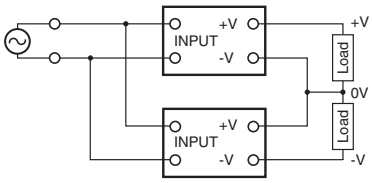

- Depending on the model, internal circuits may be damaged due to startup failure when the power is turned ON if loads such as a servomotor or operational amplifier may operate in series. Therefore, connect bypass diodes (D1, D2) as shown in the following figure. If the list of models that support series connection of outputs says that an external diode is not required, an external diode is also not required for positive/negative outputs.

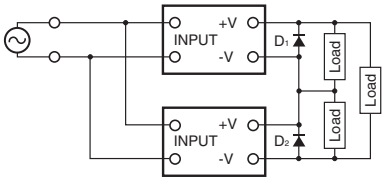

- Use the following information as a guide to the diode type, dialectic strength, and current.

Type	Schottky Barrier diode
Dielectric strength (V_{RRM})	Twice the output voltage or above
Forward current (I_F)	Twice the rated output current or above

Parallel Operation

Parallel operation is used when the output current from one Power Supply is insufficient for the load. Power Supplies are connected in parallel to increase the output current.

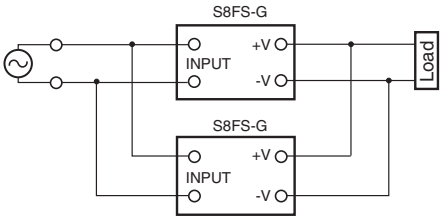

Power Supplies without the Parallel Operation Option

Parallel operation is not possible.

S8FS-G60024□-W□
(Models with the Parallel Operation Option)

Up to five Power Supplies can be connected in parallel operation. You must meet the following conditions to use parallel operation.

- The internal parts may occasionally deteriorate or be damaged. To operate in parallel, set the switch to the "PARALLEL" side.
- For parallel operation, always use Power Supplies with the same model number.
- Use the output voltage adjusters (V. ADJ) to adjust the difference in the output voltages to 50 mV or less between Power Supplies that are used in parallel operation.
- The length and thickness of each wire connected to the load must be the same so that there is no difference in the voltage drop value between the load and the output terminals of each Power Supply.
- Drastic fluctuations in the load (including fluctuations that occur when starting and starting the load) may reduce the output voltage. If fluctuations in the output voltage that result from drastic fluctuations in the load would be a problem, connect external diodes as shown in the following diagram.
- Use the following information as a guide to the diode type, dialectic strength, and current.

Type	Schottky Barrier diode
Dielectric strength (V_{RRM})	Twice the output voltage or above
Forward current (I_F)	Twice the rated output current or above

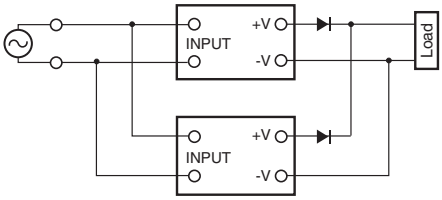

Backup Operation

Backup operation is possible if you use two Power Supplies of the same model. Even if one Power Supplies fails, operation can be continued with the other Power Supply. Make sure that the maximum load does not exceed the capacity of one Power Supply.
Connect the S8VK-R or external diodes as shown in the following figure for backup operation. Refer to the S8VK-R datasheet (Cat. No.: T059) for information on using the S8VK-R.

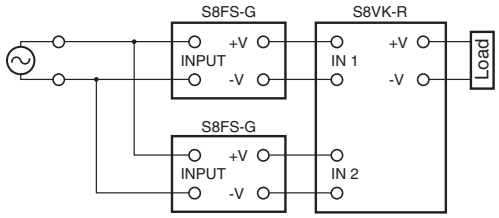

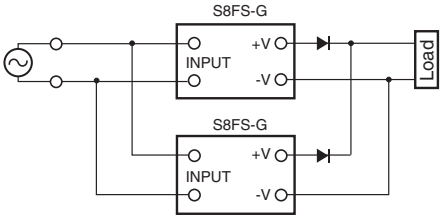

Use the following information as a guide to the diode type, dialectic strength, and current.

Type	Schottky Barrier diode
Dielectric strength (V_{RRM})	Twice the output voltage or above
Forward current (I_F)	Twice the rated output current or above

In Case There Is No Output Voltage

There is a possibility that overload protection, overvoltage protection, or overheating protection are functioning. The internal protection may operate if a large amount of surge voltage, such as a lightning inrush, is applied to the input. In addition, other possible causes for some models include stoppage of the built-in fan and the remote control function (OFF). Check the following five points. If there is still no output voltage, contact your OMRON representative.

- Checking Overload Protection:
  Remove the load wires and check whether the load is in an overload state or is short-circuited.
- Checking Overvoltage or Internal Protection:
  Turn the power supply OFF, leave it OFF for at least three minutes, and then turn it ON again to see if this clears the condition.
- Checking Overheating Protection (300 W/600 W):
  Turn OFF the input power supply long enough for the Power Supply to cool sufficiently and then turn it ON again.
- Checking for Built-in Fan Stoppage (300 W/600 W):
  Check whether or not the built-in fan has stopped.
- Confirming Remote Control Operation (Power Supplies with Remote Control):
  Check whether or not the +RC and -RC terminals are open. Connect the terminals as specified.

Charging a Battery

If you connect a battery as the load, install overcurrent control and overvoltage protection circuits.

Built-in Fan Replacement

<Only S8FS-G300□□□/600□□□>
The built-in fan cannot be replaced.

Audible Noise at Power ON

<Only S8FS-G300□□□/600□□□>
A harmonic current suppression circuit is built into the Power Supply. This circuit can create noise when the input is turned ON, but it will last only until the internal circuits stabilize and does not indicate any problem in the Power Supply.